Universal Turing Market Machines (UTMM)

Andrew Kessler* Jamie Gilchrist*

Abstract

A Universal Turing Market Machine (UTMM) is a blockchain-based system in which market policy itself becomes an adaptive, verifiable program. Unlike conventional smart contract platforms that expand the expressive power of the state transition function δ, UTMMs treat transaction history as an epistemic substrate and perform bounded search over a constrained policy space.

The central claim is structural rather than computational: markets are not limited by insufficient programmability, but by incomplete knowledge at design time. UTMMs therefore embed a deterministic feature extraction operator, a constrained hypothesis class of admissible policies, an adaptive search operator, and an asymmetric verification layer under proof-of-work consensus. Adaptation occurs within classical computability limits; epistemic power arises from continuous feedback against real transaction data rather than from increased computational class.

1 Introduction

Market design is often approached as an ex ante engineering problem: specify incentives, encode rules, and deploy a mechanism expected to converge toward equilibrium. This assumes that relevant knowledge (preferences, constraints, risk tolerances, and structural relationships) can be formalised before deployment. In open economic systems this assumption fails. Knowledge is dispersed, non-stationary, and partially observable.

Smart contract platforms increase the expressiveness of the transition function δ governing state evolution. This enables richer execution logic but does not solve the epistemic problem. Execution power and knowledge extraction are orthogonal.

We propose the **Universal Turing Market Machine (UTMM)**: a programmable substrate in which policy itself is subject to bounded, deterministic adaptation. Rather than expanding δ, UTMMs introduce a controlled adaptive operator over a constrained policy space, evaluated deterministically against transaction history and secured under adversarial consensus.

2 Computational and Epistemic Foundations

2.1 Computability Constraint

Let a market mechanism be represented as a partial recursive function:

$$M : \Sigma^* \to \Sigma^*$$

*Lineage

mapping admissible transaction sequences to updated states and allocations.

A market is computable if its operational rules admit finite precision representation and bounded execution. UTMMs do not extend beyond this class. They do not solve undecidable problems or compute non-recursive functions.

The novelty lies in altering informational boundary conditions: the system continuously absorbs new input (transaction history) and refines policy within a fixed hypothesis class.

2.2 Markets as Epistemic Systems

Markets aggregate dispersed information through costly action. Prices and transactions reveal local knowledge without central coordination. The UTMM formalises this process.

Let:

- S_t denote ledger state at time t,
- $\Phi : S_t \to \mathcal{F}$ a deterministic feature extractor,
- Π a constrained policy space,
- $J : \Pi \times S_t \to \mathbb{R}^k$ a deterministic objective,
- $\mathcal{A}$ a bounded adaptive operator.

Policy evolves via:

$$\pi_{t+1} = \mathcal{A}\big(\pi_t, \Phi(S_t), J\big)$$

Windowed evaluation ensures bounded influence:

$$\pi_{t+1} = \mathcal{A}\big(\pi_t, \Phi(S_t^{(W)}), J\big)$$

Adaptation operates strictly within Π; the transition function δ remains fixed. Epistemic gain arises from new data, not expanded computational class.

3 UTMM Architecture

3.1 Blockchains as State Machines

In Bitcoin:

$$\delta_{\text{BTC}} : (\text{UTXO}, \texttt{scriptSig}, \texttt{scriptPubKey}) \to \{\text{valid}, \text{invalid}\}$$

In Ethereum:

$$\delta_{\text{ETH}} : (\text{state}, \text{tx}, \text{gas}) \to (\text{new state}, \text{receipts})$$

Both treat δ as the primary axis of expressiveness. UTMMs fix δ and generalise policy selection within it.

3.2 Adaptive Loop with Deterministic Evaluation

Evaluation is expensive; verification must not be. A zero-knowledge virtual machine (zkVM) attests that:

$$r = J(\theta, S^{(W)}; C)$$

was computed faithfully given public inputs (θ, C, seed). Verification checks proof validity and input consistency without replaying evaluation.

$$\text{Cost}_{search} \gg \text{Cost}_{verification}$$

This establishes asymmetric security while preserving determinism.

4 UTMM Prototype Implementation

Transaction fee mechanisms are among the most structurally important components of any distributed network. They regulate congestion, shape user behaviour, allocate scarce blockspace, and ultimately determine overall network utility. A poorly calibrated fee mechanism leads to one of two pathological outcomes: persistent underpricing resulting in congestion collapse and mempool saturation, or systematic overpricing that suppresses demand and destroys allocative efficiency. In both cases, network utility is dramatically degraded.

Contemporary designs such as EIP–1559 rely on rule-based update policies: a deterministic adjustment rule modifies a base fee as a function of block utilisation. While such mechanisms improve predictability relative to first-price auctions, they remain fundamentally *static policy functions*. Their parameters are chosen ex ante and remain fixed irrespective of long-horizon behavioural feedback, structural regime shifts, or adversarial adaptation.

From a Universal Turing Market Machine (UTMM) perspective, this is a categorical limitation. A rule-based fee mechanism encodes a single policy hypothesis about how price should respond to congestion. It does not search the policy space. It does not adapt its own update rule. It cannot improve through competitive selection.

The UTMM framework replaces rule-based pricing with *policy-based adaptive pricing*. Instead of committing to a fixed fee adjustment equation, the network defines:

- A feature operator extracting bounded state from transaction history,
- A parameterised policy space governing fee updates,
- An objective functional capturing network utility,
- And an adaptive operator (e.g. a genetic algorithm) that searches the policy space.

Transaction fees are therefore no longer determined by a static formula, but by an evolving policy $\theta \in \Pi$ that competes under deterministic evaluation. Policies that improve objective performance—measured in terms of revenue efficiency, latency control, stability, and allocative fairness—survive. Policies that degrade network utility are eliminated.

Crucially, this reframes the fee mechanism itself as a programmable object subject to market-style selection pressure. Rather than tuning parameters by governance or off-chain coordination, the network internalises the optimisation process. The search for optimal transaction pricing becomes endogenous.

This first use case therefore serves as a minimal but powerful demonstration of UTMM capability: if transaction fee policy can self-organise toward higher network utility under deterministic evaluation and adversarial constraints, then markets-as-programs cease to be metaphorical and become operational.

The following prototype implementation instantiates this adaptive loop in a controlled GPU market environment, isolating policy evolution, deterministic evaluation, and verifiable scoring.

A reference implementation of the prototype GPU market simulator and zero–knowledge evaluation pipeline is available as open-source code:

`https://github.com/lineage-foundation/UTMM`

The repository contains the deterministic market simulator, policy evolution framework, and zkVM verification layer used in the experiments described in this section.
To validate the feasibility of the UTMM adaptive loop independently of full ledger inference, we implemented a deterministic proof-of-concept GPU market system that instantiates the discovery–adaptation–validation cycle under controlled conditions.

The prototype separates into two components:

1. A deterministic GPU market simulator with constrained policy evolution.
2. A zero–knowledge evaluation layer that proves correctness of policy evaluation.

The objective is not to demonstrate equilibrium optimality or realistic industrial-scale microstructure, but to verify that:

- Adaptive policy synthesis produces measurable behavioural improvement.
- Policy evaluation is strictly deterministic under fixed configuration.
- Evaluation correctness can be verified asymmetrically via succinct proofs.

4.1 GPU Market Instantiation

The prototype models a simplified GPU compute market in discrete time. Suppliers provide homogeneous GPU capacity, and jobs arrive according to a price-sensitive stochastic process. Let the arrival intensity at time t be given by:

$$\lambda_t = \lambda_0 \cdot e^{-\alpha p_t}$$

where p_t is the market price, λ_0 the base arrival rate, and α a demand elasticity parameter.

Jobs require a single GPU for a bounded duration. If no GPU is available, jobs enter a queue. The observable market state includes:

- Current price p_t
- Queue length
- GPU utilisation
- Mean waiting time
- Arrival and completion statistics

Policy parameters govern price adjustment as a deterministic function of observed features. In the current instantiation, policies are parameterised by a finite vector $\theta \in \mathbb{R}^d$ (with $d = 5$ in the v2 implementation), controlling queue sensitivity, utilisation targeting, and wait-time penalties.

The objective functional J combines weighted components:

- Revenue maximisation
- Allocation efficiency
- Wait-time minimisation
- Stability regularisation

All stochastic elements are seeded deterministically. For fixed $(\theta, \text{seed}, \text{configuration})$, the resulting reward $J(\theta)$ is reproducible.

4.2 Deterministic Market Environment

A synthetic market environment was constructed with deterministic state transitions. All stochastic elements were removed or seeded explicitly to guarantee reproducibility. Given identical configuration and policy parameters, the system produces identical transaction trajectories and reward outputs.

This ensures that the evaluation functional J is strictly deterministic.

4.3 Feature Extraction from Transaction Histories

Within the prototype, the transaction stream is treated as an observable projection of latent market structure. A deterministic feature operator Φ extracts bounded state variables from transaction history, including price signals, liquidity metrics, allocation efficiency, and temporal stability measures.

The feature space is intentionally low-dimensional. The aim is not maximal representation but controlled inference over interpretable state.

4.4 Policy Hypothesis Space and Evolutionary Search

Policies are defined within a constrained parametric space Π. In the current prototype, Π is a bounded subset of $\mathbb{R}^5$.

A genetic algorithm (GA) serves as the adaptive operator $\mathcal{A}$. Each generation consists of:

1. Deterministic evaluation of each candidate policy over a fixed-length episode.
2. Selection of elite policies by objective score.
3. Tournament selection for reproduction.
4. Crossover and bounded mutation.

Because evaluation is deterministic and tie-breaking is canonicalised, fitness ordering is stable under replay. The GA therefore induces genuine selection pressure rather than stochastic drift.

Importantly, the zero–knowledge layer does not prove that the GA was executed correctly. It proves only that a submitted policy θ attains reward $J(\theta)$ under the agreed evaluator specification.

5 Adversarial and Manipulation Considerations

Because UTMMs adapt in response to transaction history, adversarial manipulation must be considered explicitly.

Participants may attempt to:

- Generate artificial transaction patterns to induce favourable policy gradients.
- Exploit update timing.
- Create short-term distortions to bias feature extraction.

Mitigation requires:

1. Bounded feature extraction windows.
2. Rate-limited policy updates.
3. Objective terms penalising instability and pathological variance.
4. Deterministic evaluation to ensure transparency of scoring.

In addition to local manipulation, coordinated actors may attempt to induce oscillatory behaviour in policy updates through alternating transaction patterns. To mitigate such effects, UTMM deployments may incorporate smoothing constraints on parameter drift, minimum activation periods for adopted policies, and regularisation terms within J penalising excessive volatility. These mechanisms bound adaptive responsiveness without eliminating flexibility.

6 Generalised Adaptive Market Pattern

The transaction fee mechanism described above is only a minimal instantiation of a broader pattern. The UTMM framework does not apply solely to pricing congestion. In principle, any market policy, product parameter, allocation rule, or service configuration that can be expressed as a bounded policy vector may be managed through the same adaptive structure.

Abstractly, a UTMM deployment defines:

1. A transactional symbol space Γ describing admissible actions,
2. A ledger state S_t formed from sequences in Γ^*,
3. A deterministic feature operator $\Phi : S_t \to \mathcal{F}$ extracting bounded market state,
4. A constrained hypothesis class Π of admissible policies,
5. A deterministic objective functional $J : \Pi \times S_t \to \mathbb{R}^k$,
6. An adaptive operator $\mathcal{A}$ (e.g. a genetic algorithm or other meta-heuristic) performing bounded search over Π.

Policy evolution follows:

$$\pi_{t+1} = \mathcal{A}\big(\pi_t, \Phi(S_t^{(W)}), J\big)$$

where $S_t^{(W)}$ denotes a bounded evaluation window.

Under deterministic evaluation, candidate policies can be compared unambiguously. Improvements in J correspond to measurable improvements in market function under the chosen objective criteria. Because evaluation is reproducible, the claim that a policy improves performance becomes publicly verifiable.

The essential abstraction is therefore independent of any specific market: define transactions, extract features, search policy space, deterministically evaluate, and cryptographically attest results. Convergence, where it occurs, is not imposed by design but emerges from repeated selection under bounded search and adversarial constraints.

The remaining question is not whether such adaptation is possible in principle, but how it can be executed securely in an adversarial environment. This motivates the consensus architecture described in the following section.

7 GPU-Based Proof-of-Work Consensus for UTMMs

UTMMs perform adaptive market computation over a public ledger. When deployed in an adversarial environment, two components become critical attack surfaces:

1. **Transaction integrity:** Transactions encode revealed economic preferences. Reordering, censorship, duplication, or selective exclusion distorts the epistemic substrate on which adaptation depends.

2. **Policy selection integrity:** Adaptive updates determine which candidate policies survive. Biasing this process distorts evolutionary trajectory.

Consensus must therefore secure both state proposal and state selection under public, adversarially robust agreement. We call this modified proof of work schema Prime Radiant Consensus (PRC)

The Prime Radiant Protocol provides:

- Deterministic time,
- Public, uncontestable randomness,
- Cumulative-work chain selection,
- Functional role separation for scalability.

7.1 Design Principle

Prime Radiant Consensus follows a Single Responsibility architecture. Consensus-critical responsibilities are separated across node classes to reduce coupling and enable vertical scaling:

1. **Mempool Nodes:** Transaction aggregation and block proposal.
2. **Validator (Mining) Nodes:** Proof-of-work validation and chain selection.
3. **Storage Nodes:** Canonical ledger persistence and audit availability.

Private nodes (clients, merchants, relays) generate transactions but do not participate in consensus.

All protocol-level communication occurs over the Fireflies gossip layer, providing secure, scalable membership with probabilistic Byzantine resilience (see Johansen et al., 2015).

7.2 GPU-Oriented Proof of Work

UTMM adaptive computation is vector-intensive. Consensus therefore employs a GPU-oriented variable-circuit hash (SandWorm-Hash), designed to:

- Favour general-purpose parallel hardware,
- Reduce ASIC specialisation advantage,
- Align consensus hardware with economically productive compute.

Proof-of-work remains the sole security primitive. Influence is proportional to active computational contribution, not passive capital stake.

SandWorm Hash is a sequentially composed, parameterized block-linking function that extends classical Nakamoto-style hashing with programmable delay, ASIC-resistance, and adaptive penalty controls.

The 80-byte block header is first expanded via a Keccak-based expansion function $E(\cdot)$ into a 1600-bit domain suitable for a verifiable delay function $\mathrm{VDF}_d(\cdot)$, where the delay parameter d enforces inherent sequential work.

The VDF output (witness) feeds a programmable pseudorandom function $\mathrm{PRF}_l(\cdot)$, derived from a ProgPoW-style construction and keyed by a prior block root k, introducing hardware-sensitive computational diversity controlled by loop parameter l.

Because the PRF output is clustered rather than uniformly distributed, it is concatenated with the current block header before final hashing. The resulting message is processed by a modified Keccak-based hash $H_p(\cdot)$, where penalty parameter p introduces additional permutation rounds, enabling fine-grained tuning of computational cost.

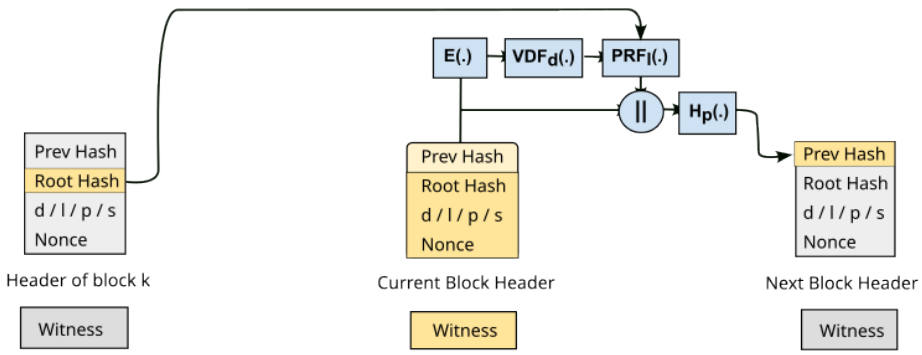

Figure 1: The SandWorm Hash for GPU incentivization through ASIC resistance.

Figure 1 illustrates the schema for the UTMM hash function. The (d, p) delay : penalty pair provides a future mechanism for hardware-adaptive difficulty control, while preserving deterministic verification and standard block-link semantics.

7.3 Deterministic Time via Fixed Block Interval

Unlike Bitcoin-style longest-chain systems with stochastic block intervals, Prime Radiant Consensus fixes block time:

$$\Delta t = 30 \text{ seconds}$$

with epoch:

$$t_0 = 2026\text{-}08\text{-}28T00{:}00{:}00Z$$

Let:

- B_c be current height,
- B_0 the Phoenix (epoch) block.

Then:

$$T_{\text{current}} = t_0 + (B_c - B_0)\Delta t$$

Block height is canonically equivalent to UTC time.

Difficulty retargeting regulates expected *solution density* per interval rather than inter-block duration. Variance manifests in number of valid proofs per block, not block timing.

Filler headers are inserted deterministically when stalls occur, preserving timestamp equivalence.

7.4 Heaviest-Chain Rule

Because block intervals are fixed, block height cannot serve as a proxy for work.

Each block records multiple valid proofs-of-work. Let w_i denote the number of accepted proofs in block i. Chain weight is:

$$W = \sum_{i=0}^{n} w_i$$

Fork resolution selects the chain with maximal cumulative work W. Figure 2 illustrates weight comparison: competing branches may share height but differ in cumulative computational density.

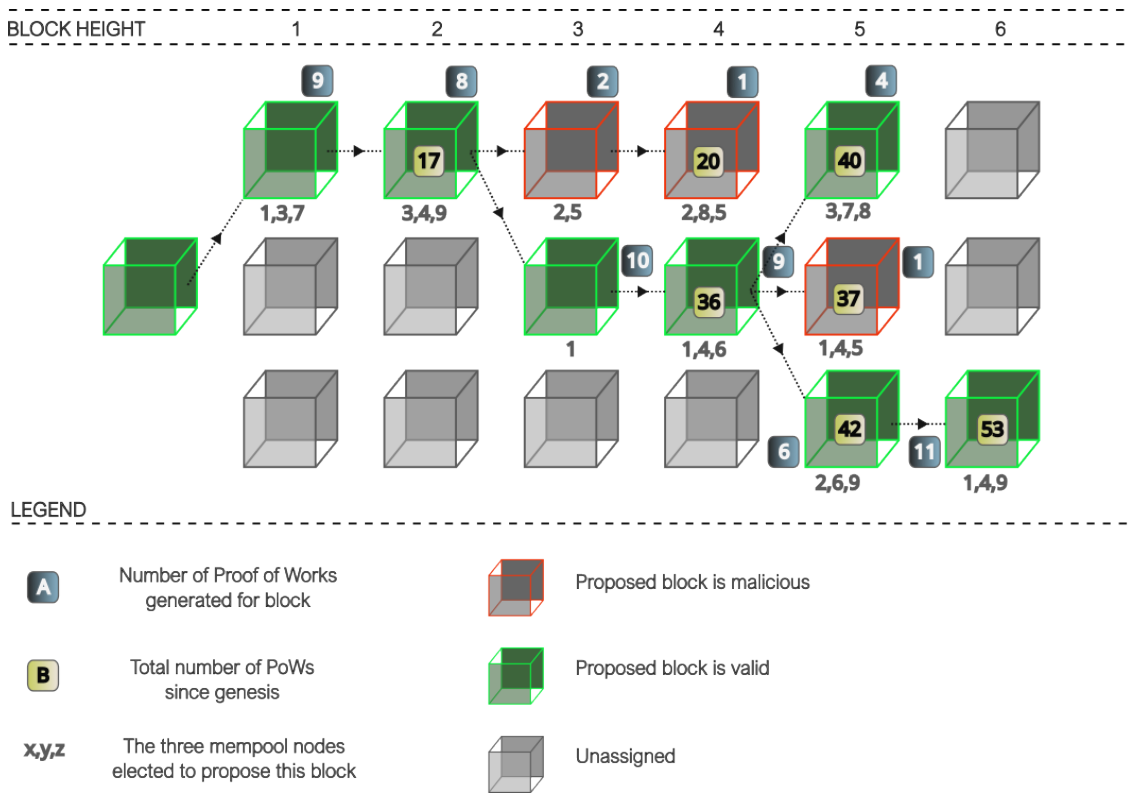

Figure 2: Fork resolution under cumulative-work (heaviest-chain) rule.

This rule is fundamental. All recovery, election, and censorship resolution ultimately reduce to cumulative-work convergence.

7.5 UNiCORN Randomness Integration

UNiCORN provides publicly verifiable, uncontestable randomness using time-delayed Sloth computation (Lenstra & Wesolowski, 2015). Its security rests on:

- At least one honest entropy contributor,
- Commitment publication prior to reveal,
- Enforced wall-clock latency preventing grinding.

UNiCORN outputs seed a CSPRNG for:

- Block linkage selection among valid proofs,
- Transaction selection,
- Daily mempool triple rotation.

7.6 Bootstrap Phase: Classical Identity Mining and Mempool Election

The mempool election process occurs only during network bootstrap or full reinitialisation. It is not part of normal Prime Radiant Consensus (PRC) operation. Prior to the existence of an elected mempool ring, the network lacks coordinated API endpoints, structured aggregation, and high-level orchestration. In this pre-coordination phase, classical Nakamoto consensus is employed.

During bootstrap, candidates mine in the traditional Bitcoin manner: variable block times, probabilistic discovery, and longest-chain fork resolution. The target inter-block time is approximately 30 seconds on average, but block arrival remains stochastic. Chain selection follows the standard *longest-chain rule*.

Crucially, this mining does not produce currency tokens. Instead, successful block discovery produces an *identity ticket*: an ORCiD-formatted identifier embedded in the coinbase transaction. These identity tickets function solely as entry credentials for mempool candidacy. They carry no monetary value and cannot be transferred.

The bootstrap mining phase proceeds for a pre-agreed duration (e.g. 240 blocks, approximately two hours). At the conclusion of this interval, the ten ORCiD identifiers with the highest number of successfully mined identity tickets are designated as the elected mempool set.

Any network participant may then construct and broadcast a *membership block* containing the ordered list of the ten elected mempool identities. Rationally, the elected nodes are incentivised to ensure this block is produced promptly. Canonical membership is determined via longest-chain resolution if competing membership blocks exist.

Following membership finalisation, the network transitions from stochastic block-time mode to fixed-interval PRC mode. The elected mempools coordinate timestamp alignment by:

- Adding filler block headers if the chain lags expected UTC time, or
- Waiting if block production has advanced ahead of the deterministic timestamp schedule.

Once block height is synchronised to the canonical UTC mapping, the network enters fixed 30-second interval operation. The first UNiCORN entropy extraction is then performed, selecting the initial mempool triple for operational coordination. At this point, Prime Radiant Consensus becomes fully active and normal operation commences.

7.7 Standard Operation

In steady state:

- Ten mempool nodes are active.
- Every 2880 blocks (one UTC day), UNiCORN output seeds CSPRNG.
- Three mempools are selected to form a Raft cluster.

Raft provides availability and operational fault tolerance only. It does not secure consensus. Consensus security remains proof-of-work based.

7.8 Block Construction

Mempool nodes:

1. Validate transactions,
2. Prevent double-spends,
3. Aggregate transactions,
4. Compute universal mempool Merkle root H_m.

Each validator computes:

$$H_v = \text{Merkle}(H_m \| H_{coinbase})$$

Mining occurs over H_v.

Multiple valid proofs per interval are expected (target ≈ 11). UNiCORN-seeded CSPRNG selects canonical linkage among valid proofs.

7.9 Attack Handling and Recovery

All disputes resolve via cumulative-work selection.

Hard Attacks Invalid blocks or double spends.

Mitigation:

- Gossip evidence,
- De-list offending mempools,
- Redirect hash power to valid chain.

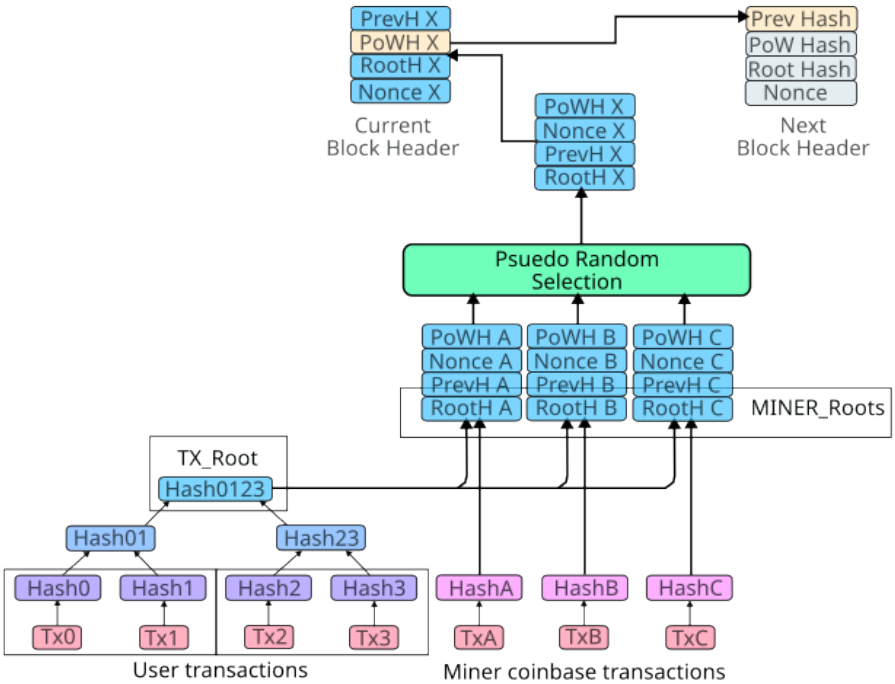

Figure 3: Nested Merkle structure separating universal transaction root from miner-specific coinbase roots.

Soft Attacks Censorship or exclusion.

Mitigation:

- Force-gossip transactions,
- Public visibility of exclusion,
- Hash-rate migration to compliant mempools.

7.10 Recovery Modes

Figure 4 illustrates:

1. Clock balancing via filler headers,
2. Partial mempool re-election (if ≥ 4 honest nodes remain),
3. Phoenix restart (if fewer remain).

In all cases, eventual convergence is guaranteed assuming majority honest hash power.

7.11 Security Summary

Security derives from:

- Cumulative proof-of-work chain selection,

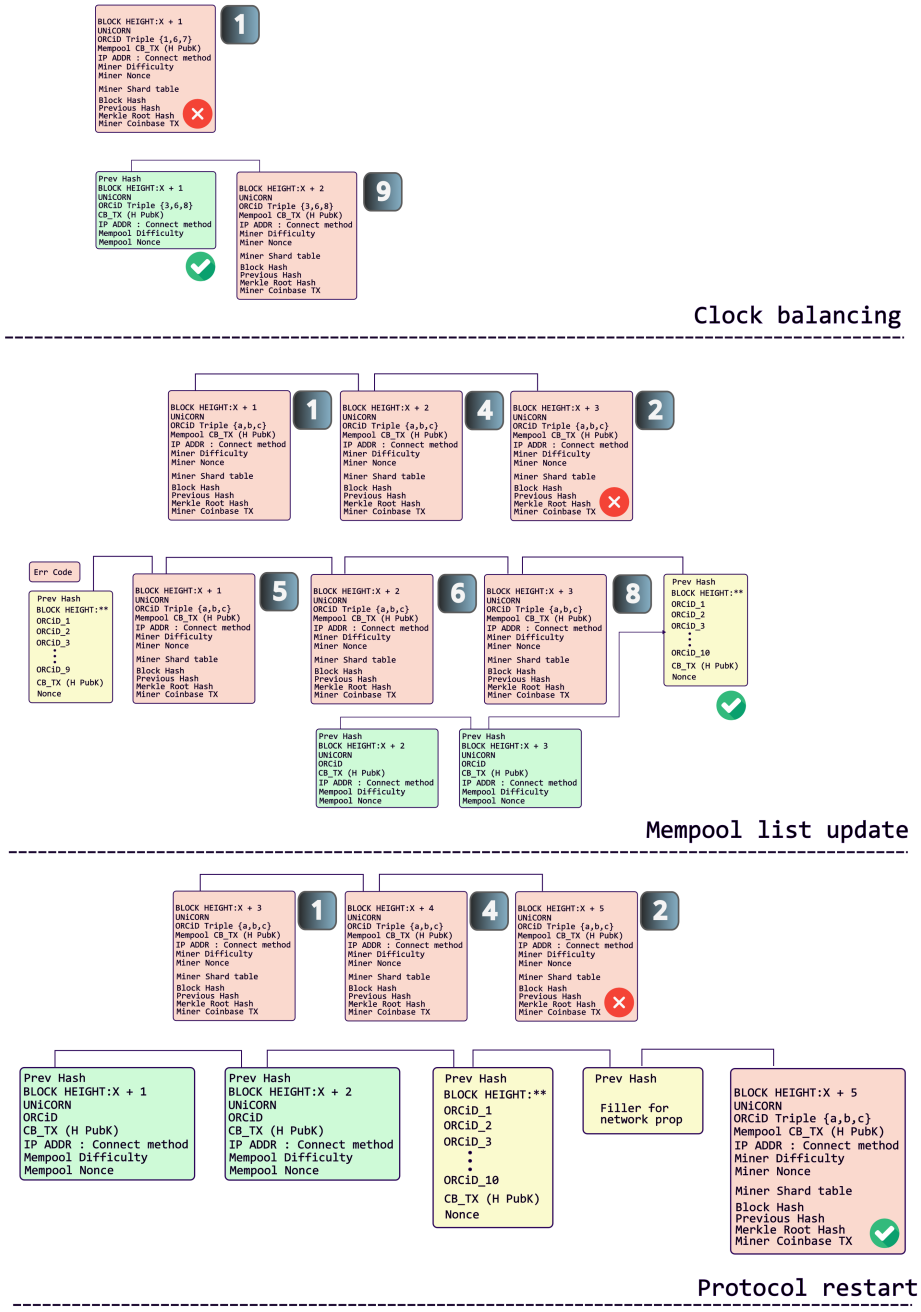

Figure 4: Consensus recovery under fork or mempool compromise using cumulative-work selection.

- Deterministic timestamp equivalence,
- Publicly verifiable UNiCORN randomness,
- Fireflies membership gossip,
- Functional role separation.

Consensus authority ultimately reduces to cumulative work:

$$\text{Mempool} \rightarrow \text{Validator} \rightarrow \text{Storage}$$

Validators enforce canonical state by selecting the heaviest chain.

7.12 GA Workload Blocks and Quality-Weighted Selection

Under standard transaction-only operation, an average of eleven validators discover valid proofs of work per block interval. A UNiCORN-seeded CSPRNG selects one candidate uniformly for canonical linkage, preserving unbiased selection under cumulative-work consensus.

When a user submits a *GA workload*, the selection mechanism is modified. A GA workload consists of a constraint specification, a deterministic fitness function, and a public key. Validators are thereby invited to perform bounded evolutionary search over a defined policy space. Each validator independently executes a genetic algorithm using locally chosen parameters (e.g. generation count, mutation rate, selection strategy), producing a candidate policy improvement. The resulting policy and associated reward score are evaluated deterministically inside the zkVM, generating a succinct proof attesting that the submitted policy achieves fitness $J(\theta)$ under the declared configuration.

To be eligible for block reward in a GA workload interval, a validator must satisfy two conditions:

1. Include the zkVM proof as a transaction, on-spending the verified policy result to the user's public key, and correctly compute the Merkle root combining the mempool transaction set with its coinbase transaction.
2. Discover a valid proof of work over the resulting Merkle root within the fixed 30-second interval.

Among all candidates satisfying both conditions, canonical block selection proceeds deterministically:

1. Candidates are ranked by verified fitness score $J(\theta)$ in descending order.
2. If multiple candidates achieve identical maximal fitness, a UNiCORN-seeded CSPRNG provides canonical tie-breaking.

Proof of work therefore establishes admissibility and Sybil resistance, deterministic evaluation establishes quality ranking, and UNiCORN randomness guarantees unbiased resolution of equivalence classes.

Validators must jointly optimise two objectives: (i) secure the ledger through timely proof-of-work, and (ii) produce high-quality adaptive improvements under bounded evolutionary search. Difficulty parameters for GA workload intervals may be adjusted independently from transaction-only intervals to maintain target solution density. The result is a consensus regime in which economic search and ledger security are structurally coupled without sacrificing determinism, verifiability, or cumulative-work finality.

8 Conclusion: Institutions as Verifiable Adaptive Programs

A common approach in current market design projects is to treat historical transaction data as a training set from which improved policies can be inferred. One might therefore be tempted to apply back-projection techniques or conventional learning systems that optimise against historical market trajectories. Such approaches implicitly assume that past observations constitute a stable training distribution from which future optimal behaviour can be inferred.

In open economic systems this assumption fails. Markets are non-stationary. Consumer preferences shift, new technologies emerge, supply structures evolve, shocks occur, and entirely new categories of economic activity appear. Learning systems trained purely through back-projection over historical market data therefore risk encoding yesterday's structure rather than discovering tomorrow's equilibria. They optimise against a static projection of the past rather than adapting to the evolving epistemic surface of the market itself.

Consequently, training on historical data alone cannot generate self-organising or self-optimising markets. It can improve prediction, but it cannot internalise the process through which markets continuously discover new information. Recognising this limitation is a critical insight when evaluating current approaches to adaptive economic infrastructure.

Once a market is instead defined as a *verifiable program*, a different design space emerges. Rather than attempting to infer optimal policies offline from historical datasets, the system can embed bounded adaptive search directly within the operational market environment itself. The market becomes the experiment. Transaction history becomes the feedback signal. Policy evolution becomes an endogenous process rather than an external training procedure.

This perspective naturally suggests a further extension. If markets themselves are verifiable programs, it becomes possible to imagine meta-programs capable of composing or instantiating entire market structures. Such meta-level code could enable the spontaneous formation of value networks in which new economic coordination mechanisms emerge dynamically from shared computational substrates. Exploring such meta-programmable market formation lies beyond the scope of the present work, but represents an important direction for future research.

The central contribution of the Universal Turing Market Machine is therefore not increased computational power, nor merely adaptive pricing, nor even a novel consensus mechanism. It is a reframing of what a blockchain-secured system can represent.

Traditional smart contract platforms treat rules as static artefacts: once deployed, the transition function δ executes faithfully, but the policy encoded within it remains fundamentally ex ante. Governance, when required, is external. Optimisation is social, not endogenous.

UTMMs alter this boundary. They preserve the classical limits of computability. They do not expand δ beyond partial recursive functions. They do not claim super-Turing inference. Instead, they make one structural move: they embed bounded, deterministic search over a constrained hypothesis space directly inside the consensus-secured state machine.

This shift has an important implication. A UTMM is not merely a programmable market. It is a programmable institution whose policy surface becomes subject to publicly verifiable adaptation.

In economic theory (North, Hayek, Ostrom, etc.), an institution is not an organization. It is a persistent system comprised of rules (that may evolve), constraints, and expectations that structures repeated interaction over time.

An institution's key properties are that:

- It constrains behaviour.
- It encodes shared expectations.
- It persists across time.
- It accumulates history.
- It coordinates agents without requiring central cognition.

From this perspective we can think of money as institutional memory. In conventional institutions, rule evolution occurs through informal coordination, governance votes, or discretionary authority. In UTMMs, policy updates are evaluated deterministically, scored against transparent objectives, and selected under cumulative proof-of-work consensus. The epistemic process that markets perform implicitly (trial, error, selection) is made explicit, constrained, and cryptographically attestable.

Consensus in this architecture does more than order transactions. It secures the integrity of an adaptive process. Cumulative work anchors state. Deterministic time anchors evaluation windows. Public randomness anchors selection. Together, they ensure that adaptation remains accountable to objective measurement rather than opaque discretion.

The deeper insight is therefore institutional rather than technical: UTMMs formalise a class of systems in which optimisation itself becomes a first-class, consensus-governed object. Policy is no longer a fixed rule encoded at deployment, nor a governance variable adjusted episodically, but a bounded hypothesis evolving under transparent selection pressure.

This does not guarantee convergence to global optima. It does not eliminate adversarial behaviour. It does not escape computational limits. What it does provide is a disciplined framework in which adaptive improvement can occur without abandoning determinism, verifiability, or adversarial robustness.

In this sense, UTMMs represent a shift from programmable contracts to programmable institutional dynamics. The ledger records not only transactions, but the trajectory of rule evolution itself. Markets cease to be static mechanisms executed by code; they become verifiable adaptive processes embedded within code.

That structural shift (not increased expressiveness, not rhetorical universality) is the core contribution.

Conceptually, the UTMM framework may be understood as a triangulation of three strands of institutional theory. It operationalises Hayek's view of markets as discovery processes, in which dispersed knowledge is revealed through decentralized interaction and price signals. It embeds this

discovery within Ostrom-style rule-constrained adaptation, where not only actions but the permissible evolution of rules are structured by higher-order constraints. Finally, it secures this adaptive process through North-style durable constraint enforcement, ensuring that the governing framework persists across time and stabilizes expectations. In combination, UTMMs formalise discovery, bounded rule evolution, and durable enforcement within a single consensus-secured computational substrate.