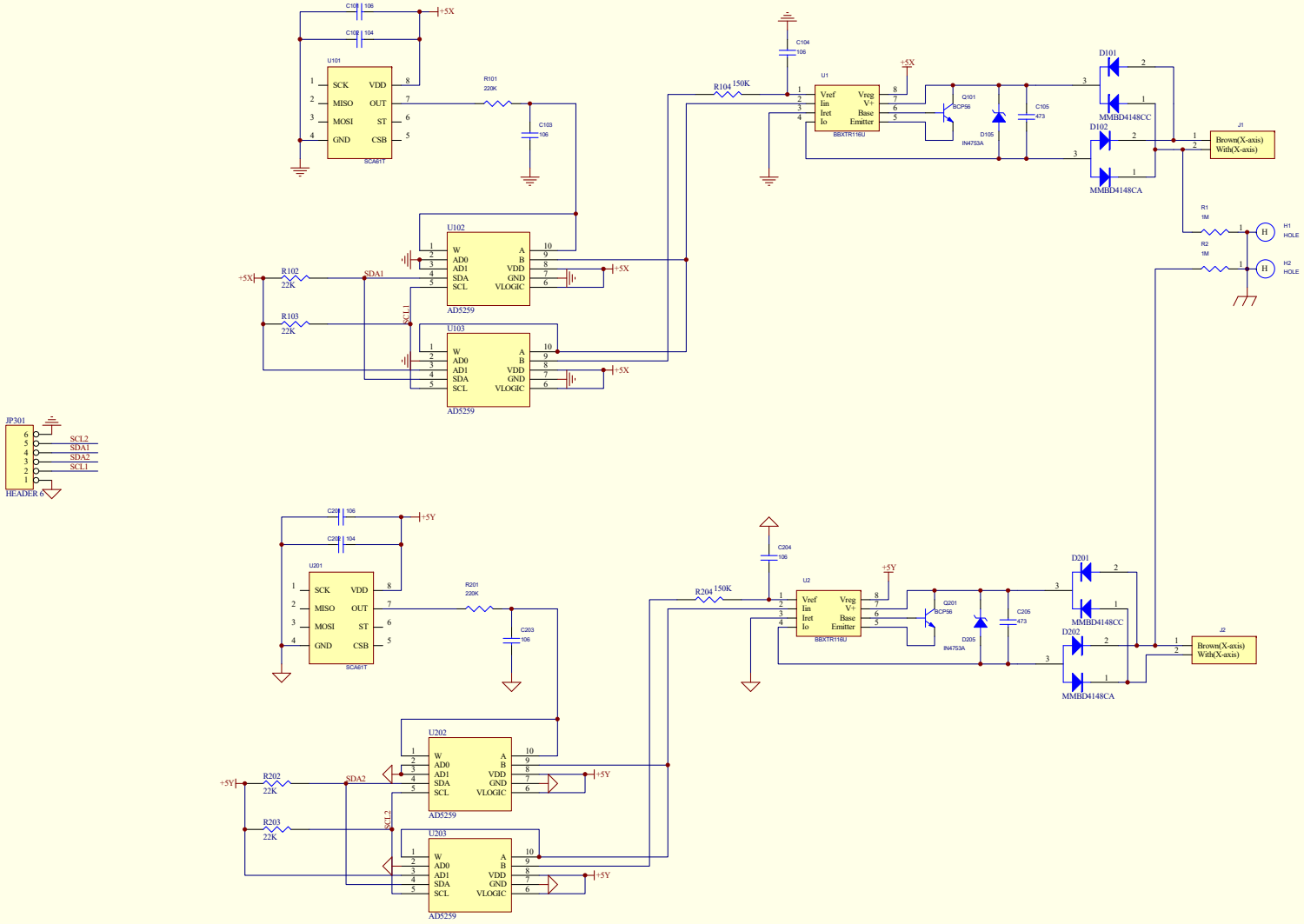

Title		
Size C	Number	Revision
Date: 5-Jan-2018	Sheet of	
File: F:\研发管理\研发汇总\研发项目汇总\34\SDMedical\CP&WTS1x4-LxxA2-SCH&PCB\SFM1248A(02P.pdb		