组会报告

蓝 鑫
2020年5月8日

Architecture

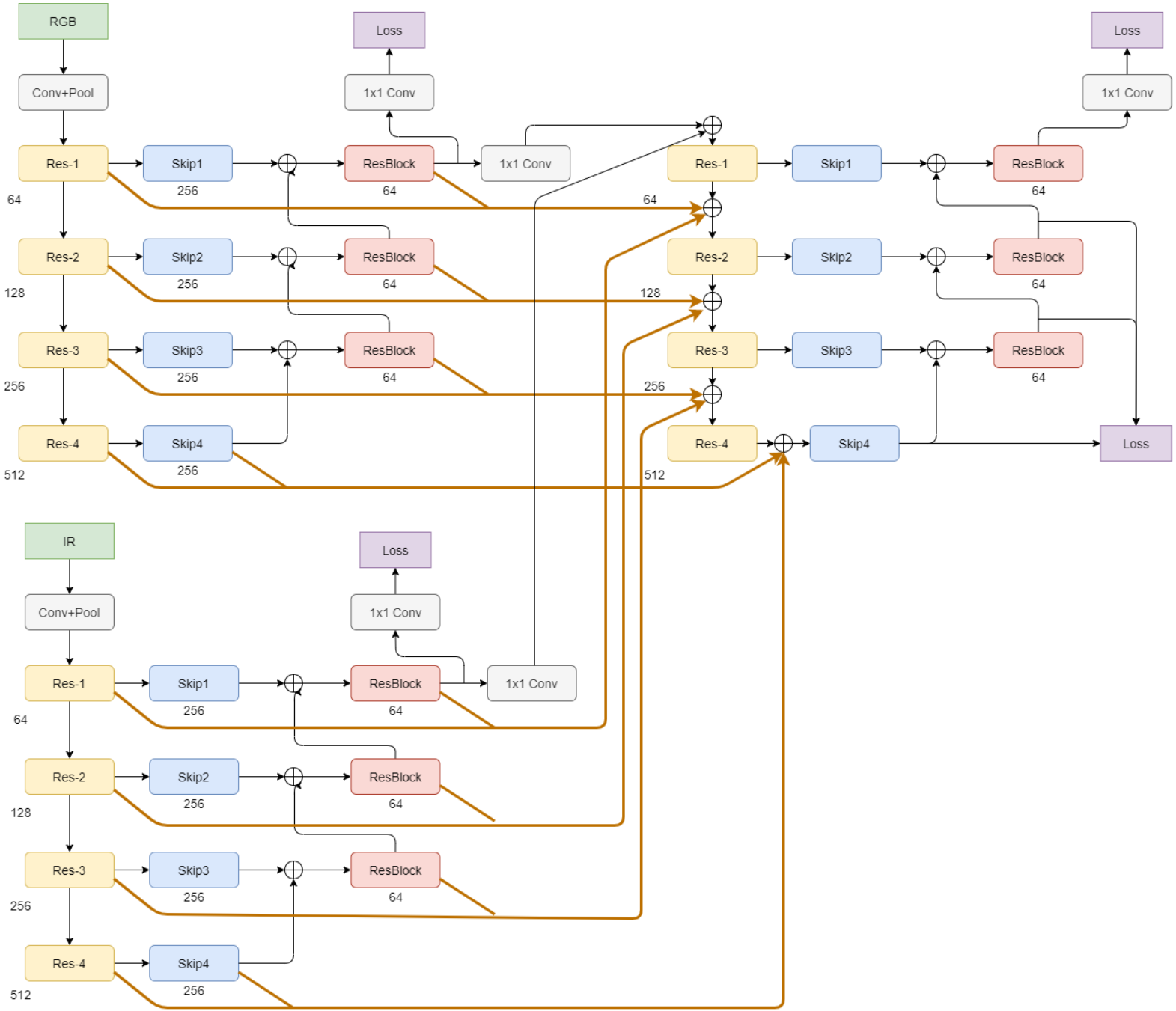

Architecture

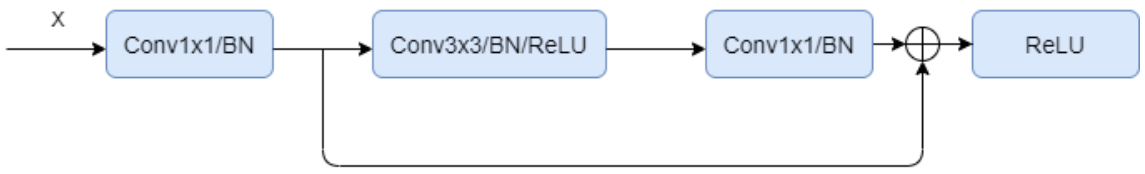

Skip

Result

Model	mIoU	params	FPS
SFNet	55.3		
RGB_IR(CA+SA,CA,SA)	57.2		
RGB_IR(EMA)	56.8		
SFNet(EMA)	57.9		
Res18	55.4	49M	42.54
RTFNet	51.2	254M	16.64

Mao

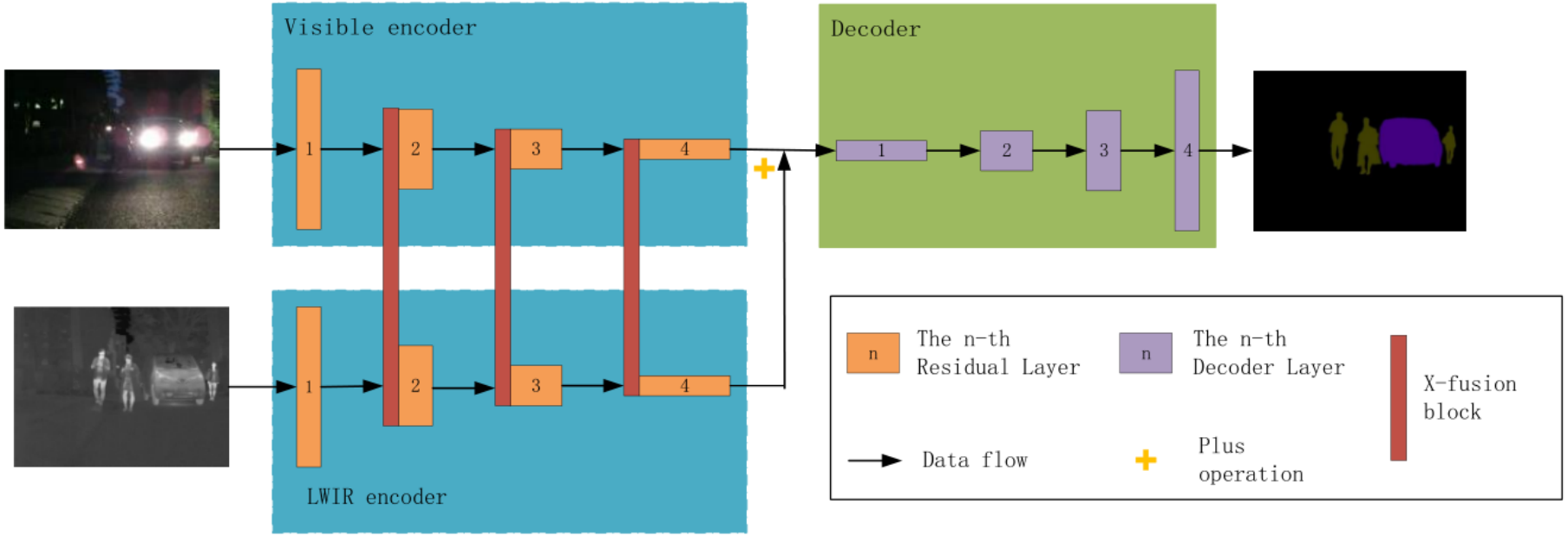

Fig.5 RTFnet with X-fusion block

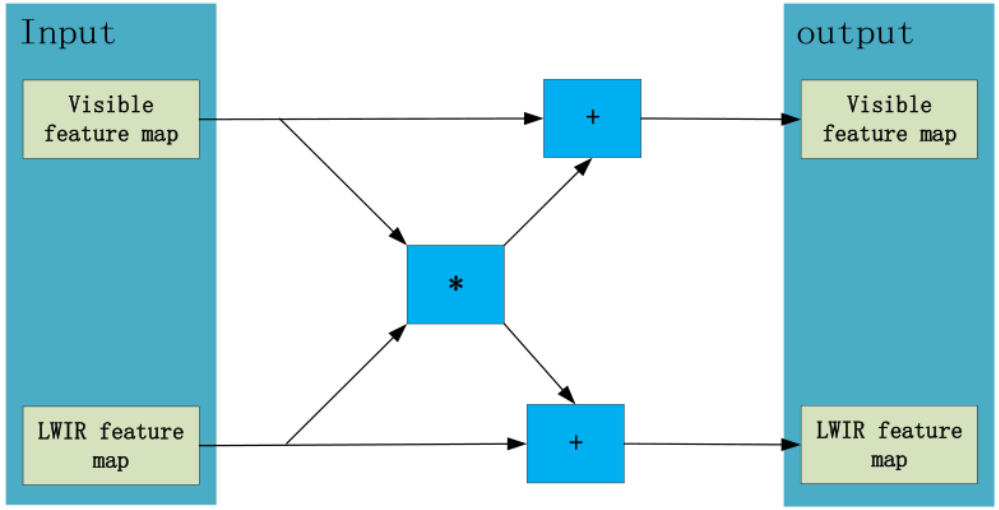

Fig.4 X-fusion block

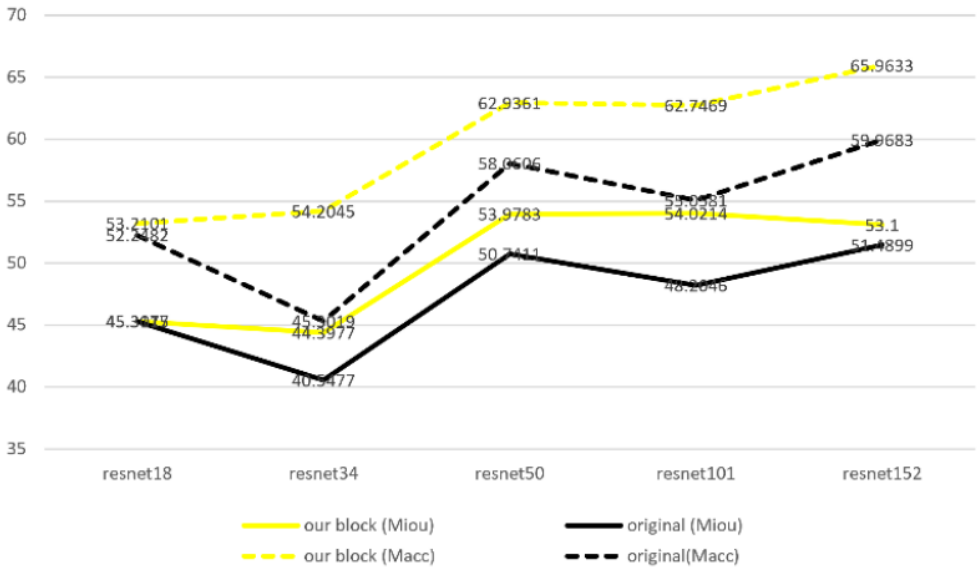

Fig.1 The test result of X-fusion block