组会报告

蓝 鑫
2020年5月15日

Motivation

Yu, C., et al. (2018). BiSeNet: Bilateral Segmentation Network for Real-Time Semantic Segmentation. ECCV 2018, Cham, Springer International Publishing.

实时分割主要方法：

1.通过裁剪或缩放来限制输入大小。**缺点：**空间细节会损失。

2.对通道剪枝。**缺点：**削弱了空间容量。

使用 U 型网络可以恢复分辨率，弥补丢失的细节，但有两个缺点：

1.完整的 U 型网络在高分辨率特征图上引入额外的计算，减慢模型速度。

2.在剪枝或 crop 中丢失的空间信息，大多不能通过引入浅层特征恢复。

基于以上，提出 Bilateral Segmentation Network，包含两个部分：1. 空间路径（Spatial Path）。2. 上下文路径（Context Path）。

Spatial Path

Yu, C., et al. (2018). BiSeNet: Bilateral Segmentation Network for Real-Time Semantic Segmentation. ECCV 2018, Cham, Springer International Publishing.

保留空间大小，编码足够的空间信息。Spatial Path 包含三层，每层包含步长为 2 的卷积（BN 和 ReLU）。该路径提取原始图像 1/8 的输出特征图。

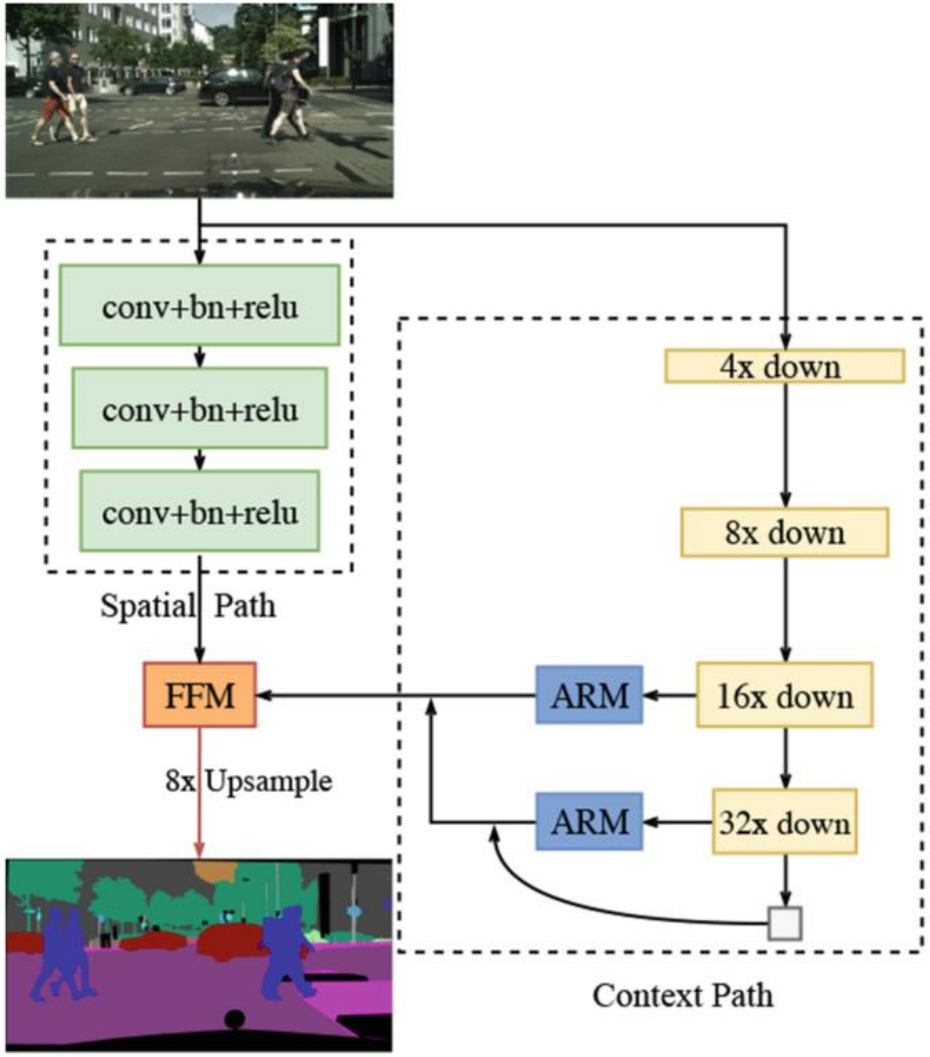

(a) Network Architecture

Context Path

Yu, C., et al. (2018). BiSeNet: Bilateral Segmentation Network for Real-Time Semantic Segmentation. ECCV 2018, Cham, Springer International Publishing.

提供足够的感受野。利用轻量级网络和全局平均池化。

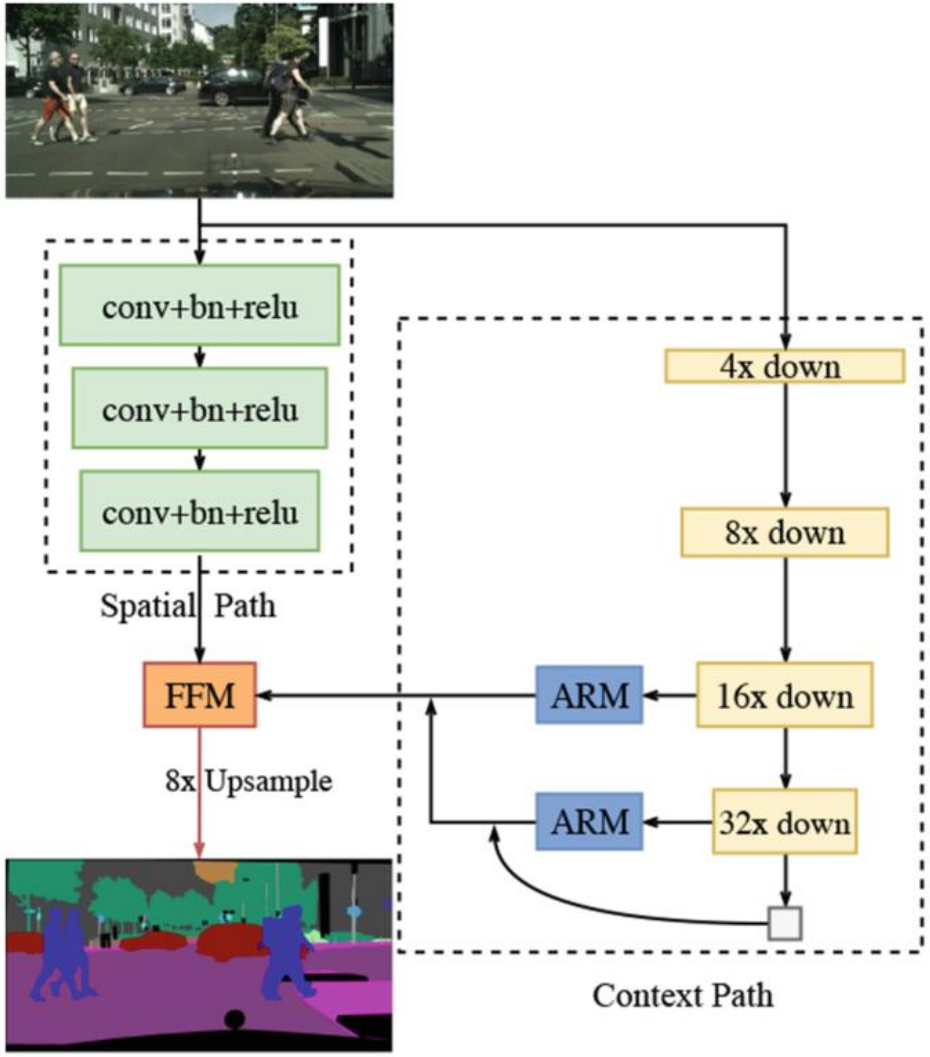

(a) Network Architecture

Module

Yu, C., et al. (2018). BiSeNet: Bilateral Segmentation Network for Real-Time Semantic Segmentation. ECCV 2018, Cham, Springer International Publishing.

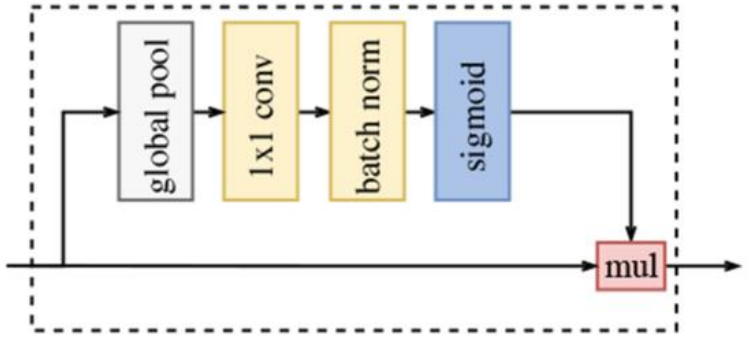

(b) Attention Refinment Module

ARM 用于 refine 特征，
引入全局信息

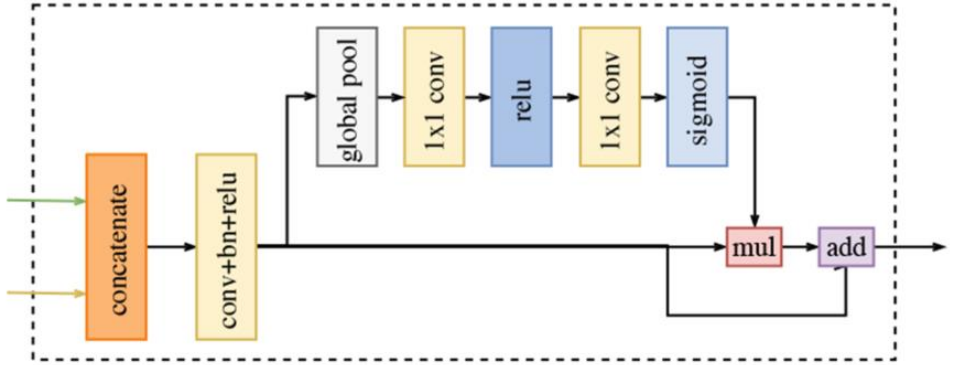

(c) Feature Fusion Module

FFM 用于细节和语义特征融合

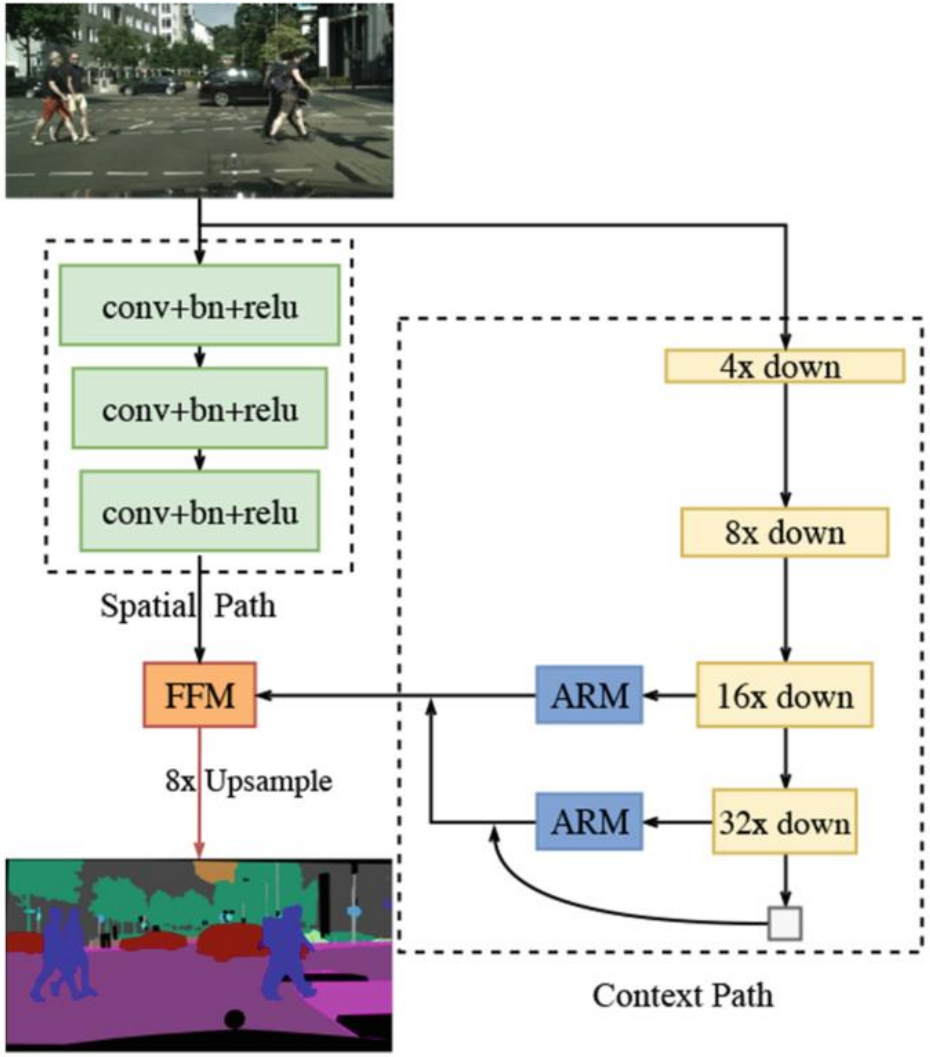

(a) Network Architecture

Experiments

Yu, C., et al. (2018). BiSeNet: Bilateral Segmentation Network for Real-Time Semantic Segmentation. ECCV 2018, Cham, Springer International Publishing.

Table 1. Accuracy and parameter analysis of our baseline model: Xception39 and Res18 on Cityscapes validation dataset. Here we use FCN-32s as the base structure. FLOPS are estimated for input of $3 \times 640 \times 360$.

Method	BaseModel	FLOPS	Parameters	Mean IOU (%)
FCN-32s	Xception39	185.5M	1.2M	60.78
FCN-32s	Res18	8.3G	42.7M	61.58

不同 backbone

Experiments

Yu, C., et al. (2018). BiSeNet: Bilateral Segmentation Network for Real-Time Semantic Segmentation. ECCV 2018, Cham, Springer International Publishing.

Table 3. Detailed performance comparison of each component in our proposed BiSeNet. **CP:** Context Path; **SP:** Spatial Path; **GP:** global average pooling; **ARM:** Attention Refinement Module; **FFM:** Feature Fusion Module.

Method	Mean IOU (%)
CP	66.01
CP+SP(Sum)	66.82
CP+SP(FFM)	67.42
CP+SP(FFM)+GP	68.42
CP+SP(FFM)+ARM	68.72
CP+SP(FFM)+GP+ARM	71.40

Ablation study

Experiments

Yu, C., et al. (2018). BiSeNet: Bilateral Segmentation Network for Real-Time Semantic Segmentation. ECCV 2018, Cham, Springer International Publishing.

Table 5. Speed comparison of our method against other *state-of-the-art* methods. Image size is W × H. The *Ours*[1] and *Ours*[2] are the BiSeNet based on Xception39 and Res18 model.

Method	NVIDIA Titan X						NVIDIA Titan XP					
	640×360		1280×720		1920×1080		640×360		1280×720		1920×1080	
	ms	fps	ms	fps	ms	fps	ms	fps	ms	fps	ms	fps
SegNet [1]	69	14.6	289	3.5	637	1.6	-	-	-	-	-	-
ENet [25]	7	135.4	21	46.8	46	21.6	-	-	-	-	-	-
Ours[1]	**5**	**203.5**	**12**	**82.3**	**24**	**41.4**	**4**	**285.2**	**8**	**124.1**	**18**	**57.3**
Ours[2]	8	129.4	21	47.9	43	23	5	205.7	13	78.8	29	34.4

不同模型

Experiments

Yu, C., et al. (2018). BiSeNet: Bilateral Segmentation Network for Real-Time Semantic Segmentation. ECCV 2018, Cham, Springer International Publishing.

Table 6. Accuracy and speed comparison of our method against other *state-of-the-art* methods on Cityscapes test dataset. We train and evaluate on NVIDIA Titan XP with 2048×1024 resolution input. "-" indicates that the methods didn't give the corresponding speed result of the accuracy.

Method	BaseModel	Mean IOU (%)		FPS
		val	*test*	
SegNet [1]	VGG16	-	56.1	-
ENet [25]	From scratch	-	58.3	-
SQ [30]	SqueezeNet [14]	-	59.8	-
ICNet [39]	PSPNet50 [40]	67.7	69.5	30.3
DLC [17]	Inception-ResNet-v2	-	71.1	-
Two-column Net [34]	Res50	<u>74.6</u>	<u>72.9</u>	14.7
Ours	Xception39	69.0	68.4	**105.8**
Ours	Res18	**74.8**	**74.7**	<u>65.5</u>