Aeronautical Band Receiver
Circuit Diagram (V3.0)

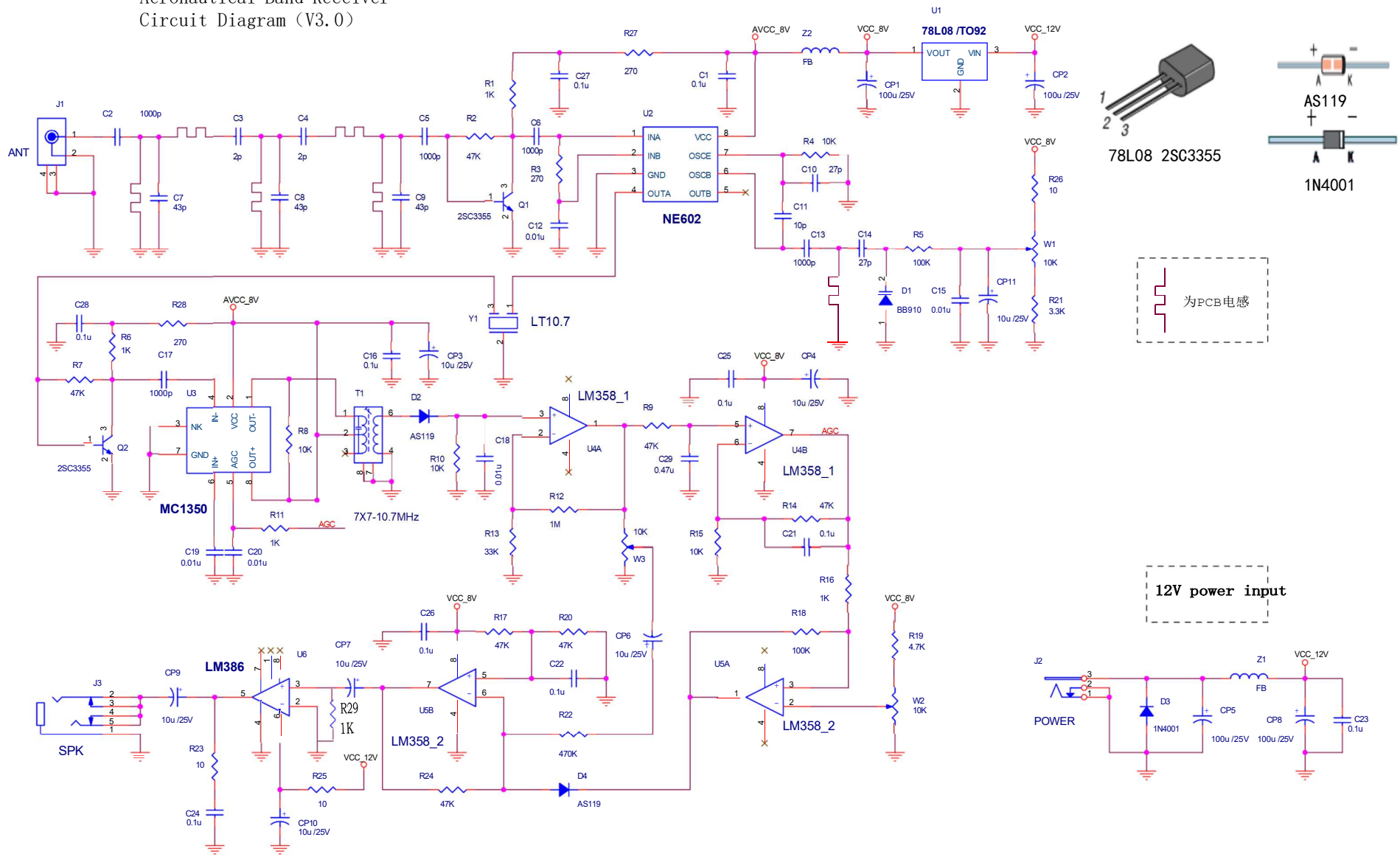

Title	01.MAIN
Size A3	Document Number HM00ABRA_3
Rev	3.0
Date:	Tuesday, June 25, 2013
Sheet	1 of 1