LINE FOLLOWING ROBOT CAR

Electronics Project Documentation

Abstract:

The line follower robot is a mobile machine that can detect and follow the line drawn on the floor. Generally, the path is predefined and can be either visible like a black line on a white surface with a high contrasted color or it can be invisible like a magnetic field. Therefore, this kind of robot should sense the line with its Infrared Ray (IR) sensors that installed under the robot. After that, the data is transmitted to the processor by specific transition buses. Hence, the processor is going to decide the proper commands and then it sends them to the driver shield and thus the path will be followed by the line follower robot.

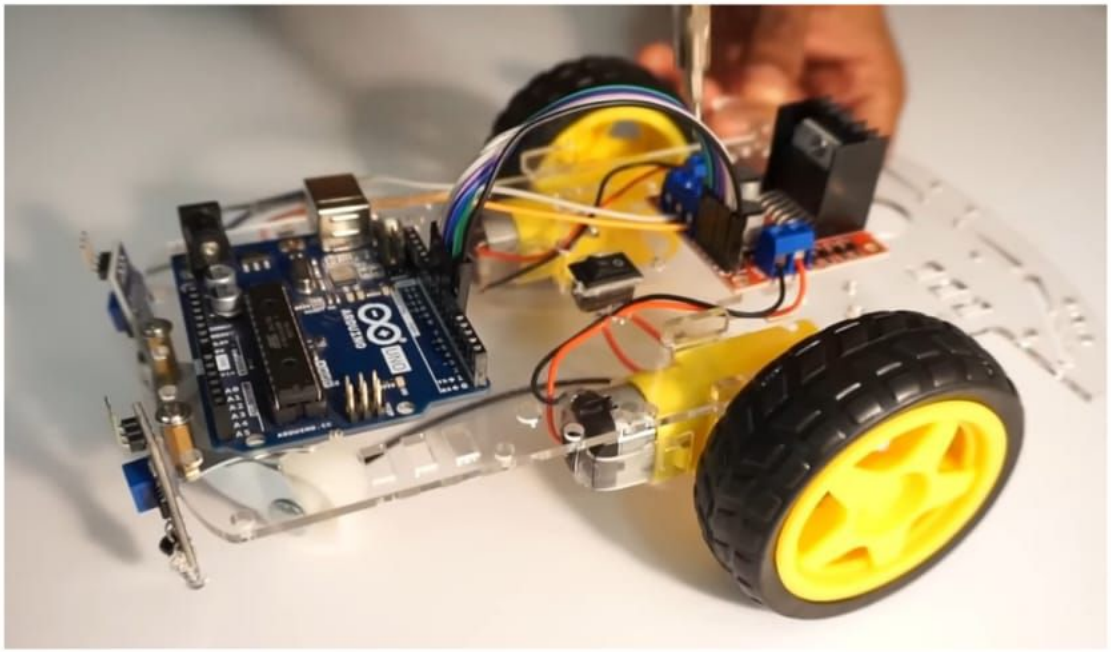

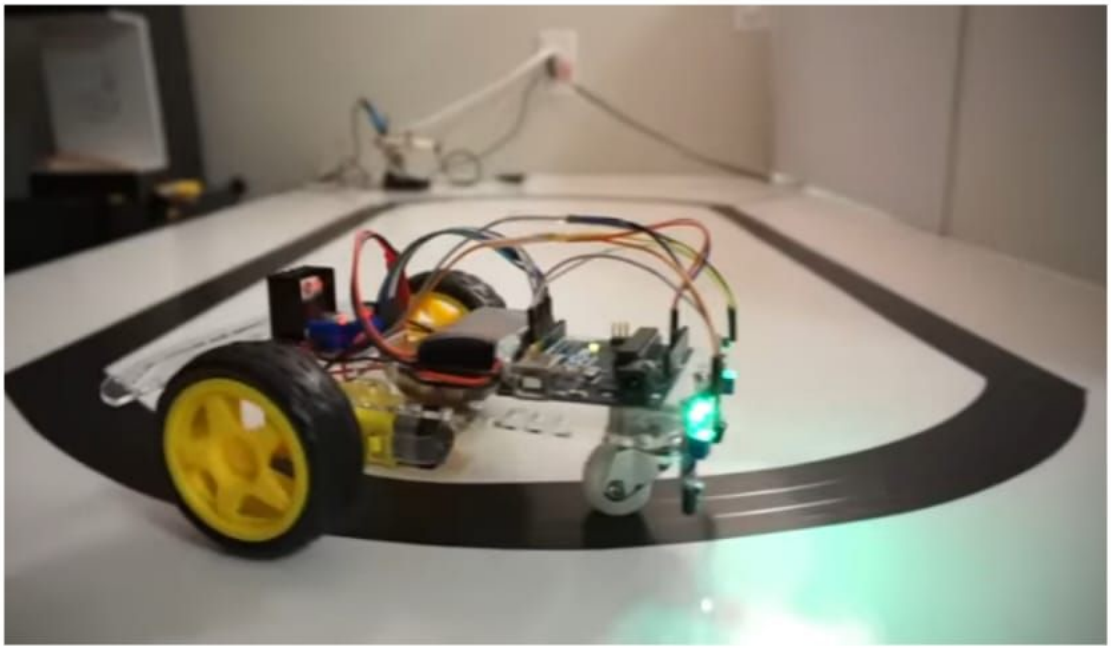

1.1 Objective:

Inthis mini project, we will design a simple Line Follower Robot car using Arduino and some other components.

1.2 Introduction:

A line follower robot car is a robot car which follows a certain path controlled by a feedback mechanism. This robot car has TWO IR sensors installed under the front part of the body, and two DC motors connected through shield driver. A circuit inside takes an input signal from two sensors and controls the speed of wheel rotation. A basic line follower robot car follows certain path and the motion of the robot along the path is controlled by controlling the rotation of wheels. The control circuitry involves the use of sensors to sense the path and the microcontroller (Arduino) to control the motor operation through the motor shield driver, based on the sensor output.

1.3 Components of Project:

The components of this project contains:

Controller (Arduino UNO): Arduino Uno acts as the main control unit (brain) of the line follower robot. It receives input signals from the IR sensors, processes them according to the programmed logic, and makes decisions about the robot's movement. Based on sensor data, it sends control signals to the motor driver to regulate the direction and speed of the motors. The Arduino also coordinates the functioning of all components and continuously executes the stored program, enabling the robot to follow the line autonomously.

Motor Shield (L293D): L293D is a Motor Driver IC used to control movement of motors with a microcontroller. It acts as a link between the Arduino Uno and the DC motors, as the Arduino cannot directly provide enough power to run the motors.
The L293D takes control signals from the Arduino and supplies the required power to the motors, allowing the robot to move forward, backward, and take left or right turns. It also helps in safe and smooth operation by protecting the Arduino from high motor current.

This motor shield consists of three ICs. We can control 4 motors with this shield The best thing about the shield is we don't need to write the whole function for driving a motor there is special library for this module. We just recall some command to run the motors

DC Motors: DC motors convert the control signals and electrical power supplied by the motor driver into mechanical motion of the wheels. In the line follower robot, two DC motors are used, one for each side of the robot, to enable independent control of the left and right movement. By varying the rotation and speed of these motors, the robot is able to move forward and perform left or right turns. Using two motors improves stability, balance, and directional control while following the line.

A DC motor must not connect directly to the Arduino pin because it can burn your Arduino so we must use transistor or in our case we use shield between Arduino and motor. By using motor shield we can control speed and as well as direction of the motor.

Sensors (IR Sensor): IR sensors play the role of detecting the path that the line follower robot has to follow. They work by emitting infrared light and sensing the reflected light from the surface below. When the sensor is over a light surface, more light is reflected, and when it is over a dark line, less light is reflected. The signals from the IR sensors are sent to the Arduino Uno, which uses this information to determine the position of the line and control the movement of the robot accordingly.
We have used Two IR Sensors as the line detecting sensor for the project that are mounted on left and right side of car. It consists of an IR LED and a Photo diode and some other components like comparator, LED etc.

1.4 Project Activity:

The whole Arduino line follower robot can be divided into 3 sections:
1: Sensor section
2: Control section
3: Driver section

The **sensor section** consists of IR sensors that continuously detect the position of the line by sensing the reflected infrared light from the surface. Based on whether the sensor is over the line or the background, it generates corresponding electrical signals.

The **control section** is handled by the Arduino Uno. It receives input signals from the IR sensors and processes them according to the program stored in its memory. Based on the sensor readings, the Arduino decides the direction in which the robot should move, such as forward, left, or right.

The **driver section** includes the L293D motor driver and DC motors. The motor driver receives control signals from the Arduino and supplies sufficient power to the motors. The DC motors then convert this electrical input into mechanical motion, allowing the robot to move and adjust its direction.

1.5 Design, Schematics and Block Diagram:

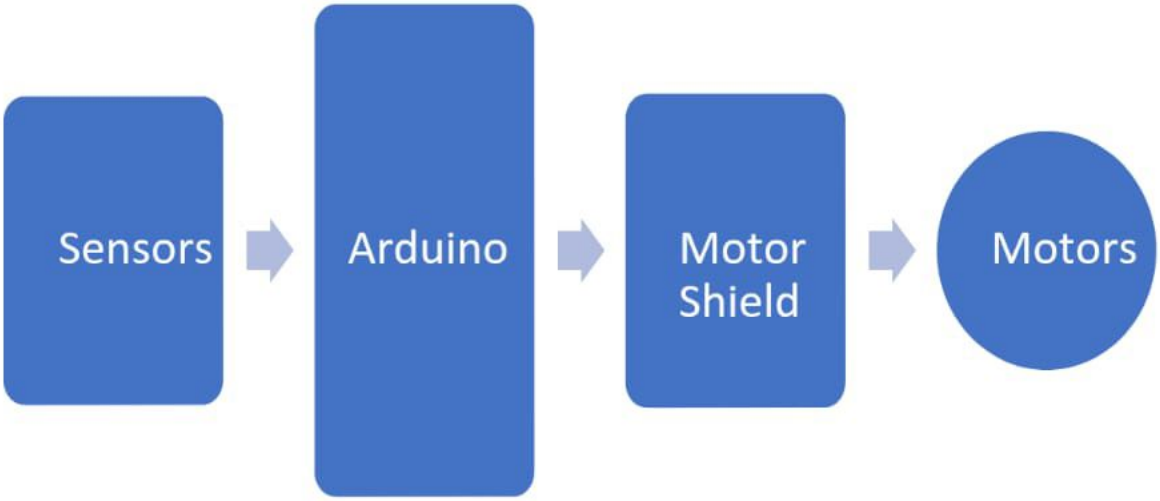

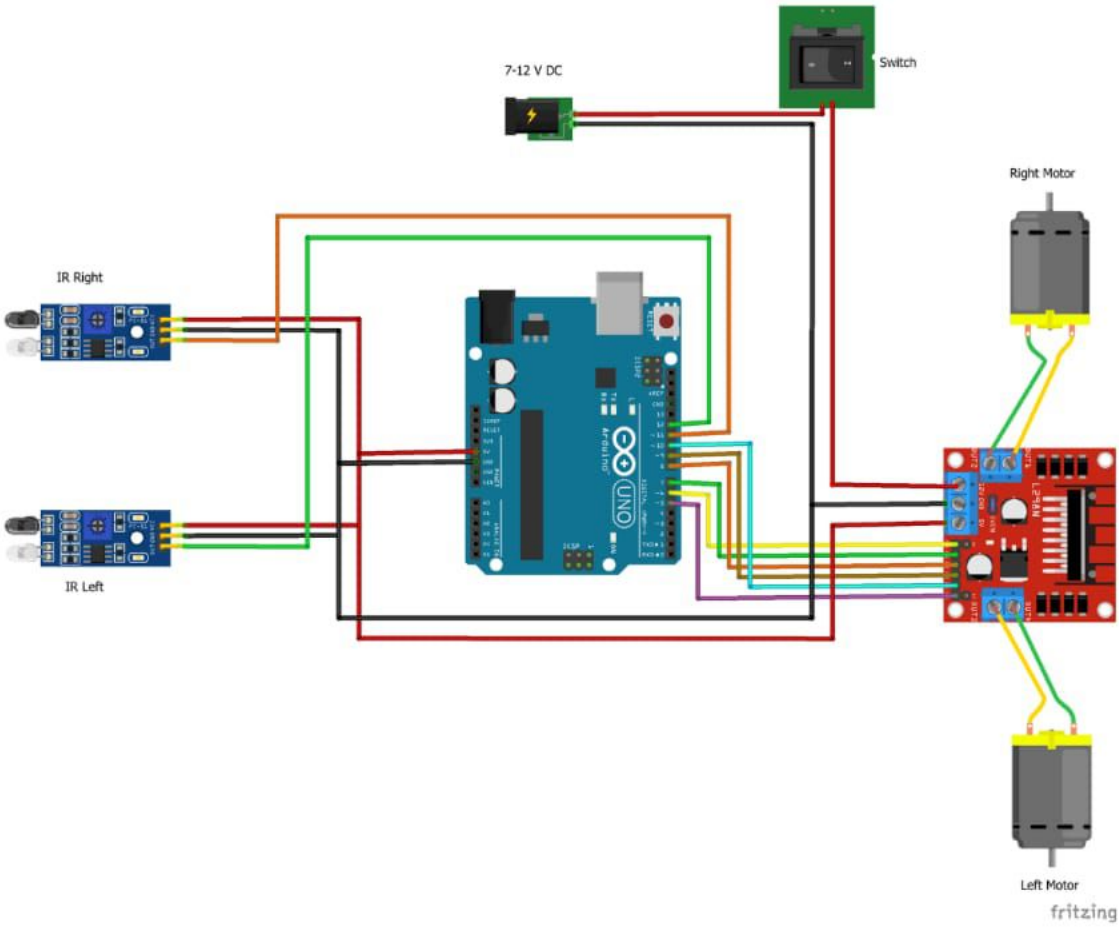

1.6 Code:

```
int ena =10;
int enb =11 ;
int in1 = 4;
int in3 =5 ;
int s1 =3;
int s2 =2;

int normalspeed = 80;
int turnspeed   = 60;

void setup() {
TCCR0B = TCCR0B & B11111000 | B00000010 ;
pinMode(s1, INPUT);
pinMode(s2, INPUT);
pinMode(in1, OUTPUT);
pinMode(in3, OUTPUT);
pinMode(ena, OUTPUT);
pinMode(enb, OUTPUT);
}
void forward(int ls, int rs) {
digitalWrite(in1, HIGH);
digitalWrite(in3, HIGH);
analogWrite(ena, ls);
analogWrite(enb, rs);
}


void leftTurn(int ls, int rs) {
digitalWrite(in1, HIGH);
digitalWrite(in3, HIGH);
analogWrite(ena, ls);
analogWrite(enb, rs);


void rightTurn(int ls, int rs) {
digitalWrite(in1, HIGH);
digitalWrite(in3, HIGH);
analogWrite(ena, ls);
analogWrite(enb, rs);
}

void stopcar() {
digitalWrite(in1, LOW);
digitalWrite(in3, LOW);
analogWrite(ena, 0);
analogWrite(enb, 0);
}

void loop() {
int ir1 = digitalRead(s1);
int ir2 = digitalRead(s2);

if (ir1 == 0 && ir2 == 0) {
forward(normalspeed, normalspeed);
}
else if (ir1 == 0 && ir2 == 1) {
rightTurn(turnspeed,0);
}
else if (ir1 == 1 && ir2 == 0) { leftTurn(0, turnspeed);
}
else {
stopcar();
}
}
```

1.7 Applications:

- Used in industries and warehouses for automated material transport.
- Serves as an educational tool for learning robotics and programming.
- Can be adapted for service robots like hospital deliveries or cleaning.
- Enables precise movement in industrial automation and assembly lines.
- Can integrate AI for complex path following.
- Can include obstacle detection for safer navigation.
- Can support wireless control and remote monitoring.
- Improvements in motors, sensors, and power can enhance efficiency.
- Can evolve into autonomous delivery bots and smart vehicles.

1.8 Limitations:

- It requires power supply.
- Lack of speed control makes it unstable.
- It can only move on a fixed track.
- Choice of line is made in the hardware abstraction and cannot be changed by software.

1.9 Component Datasheet

Arduino UNO: https://docs.arduino.cc/resources/datasheets/A000066-datasheet.pdf
LN23D : https://5.imimg.com/data5/PX/UK/MY-1833510/l293d-based-arduino-motor-shield.pdf
IR SENSORS: https://www.handsontec.com/dataspecs/sensor/IR%20Obstacle%20Detector.pdf

2.0 Conclusion

In this report we conclude from our project that if we give input through sensor in analog form then it can be converted into output of digital form. We also conclude that we can make car to follow the certain path of our choice. In this project, the sensors sense the colour of surface and according to the code the car will move left, right or straight.

The line follower robot demonstrates how sensors, microcontrollers, and motor drivers can work together to create an autonomous system. By using IR sensors to detect the path, an Arduino Uno to process signals, and DC motors controlled via an L293D driver, the robot can follow a line accurately and efficiently. This project highlights the principles of automation, robotics, and control systems, and it serves as a foundation for more advanced applications such as AI integration, obstacle avoidance, and smart industrial or service robots.