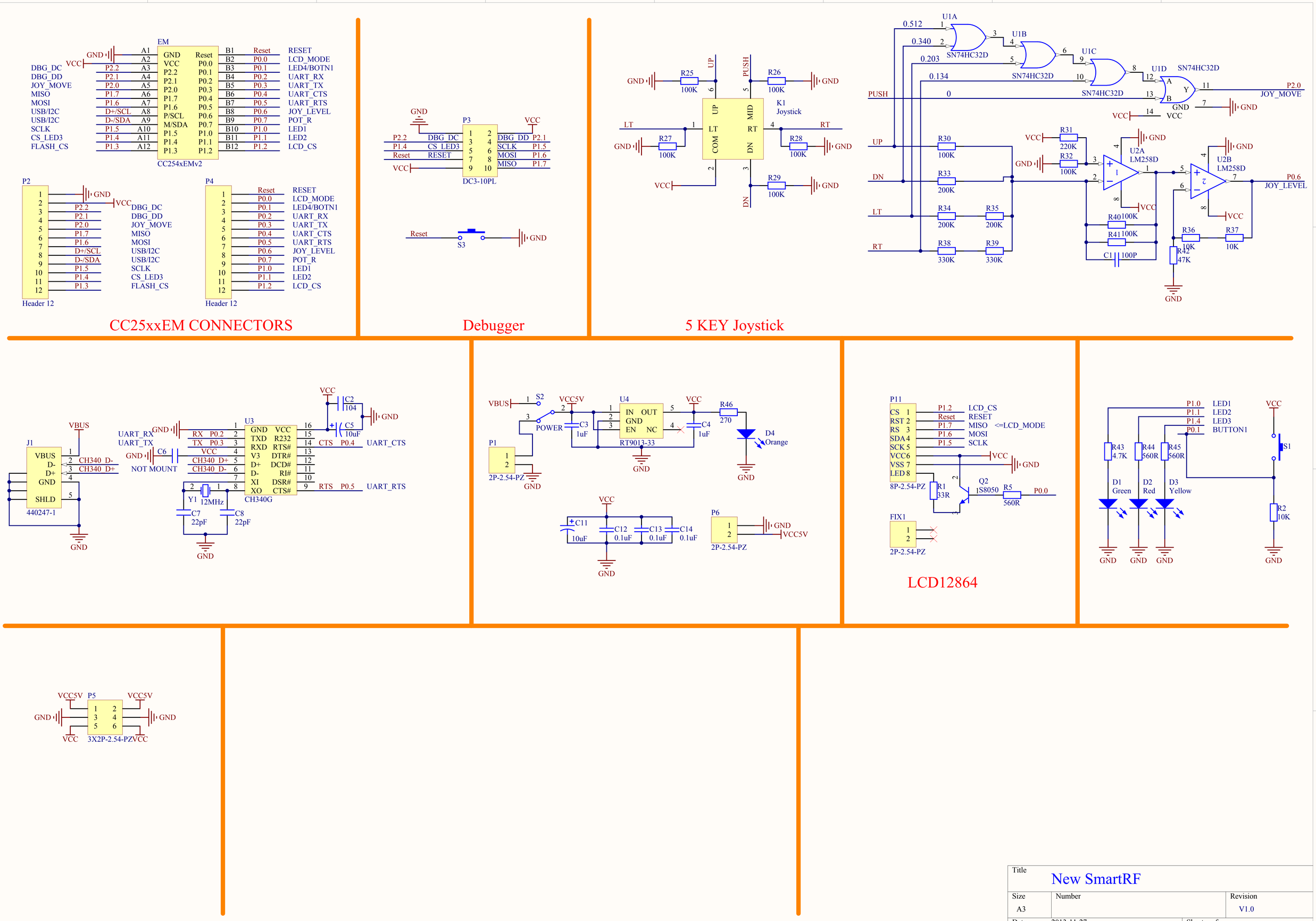

Title	New SmartRF		
Size A3	Number		Revision V1.0
Date: 2013-11-27		Sheet of	
File: E:\project\..\CC254xEK.SchDoc		Drawn By: Ghostyu	