LPDDR4-4X

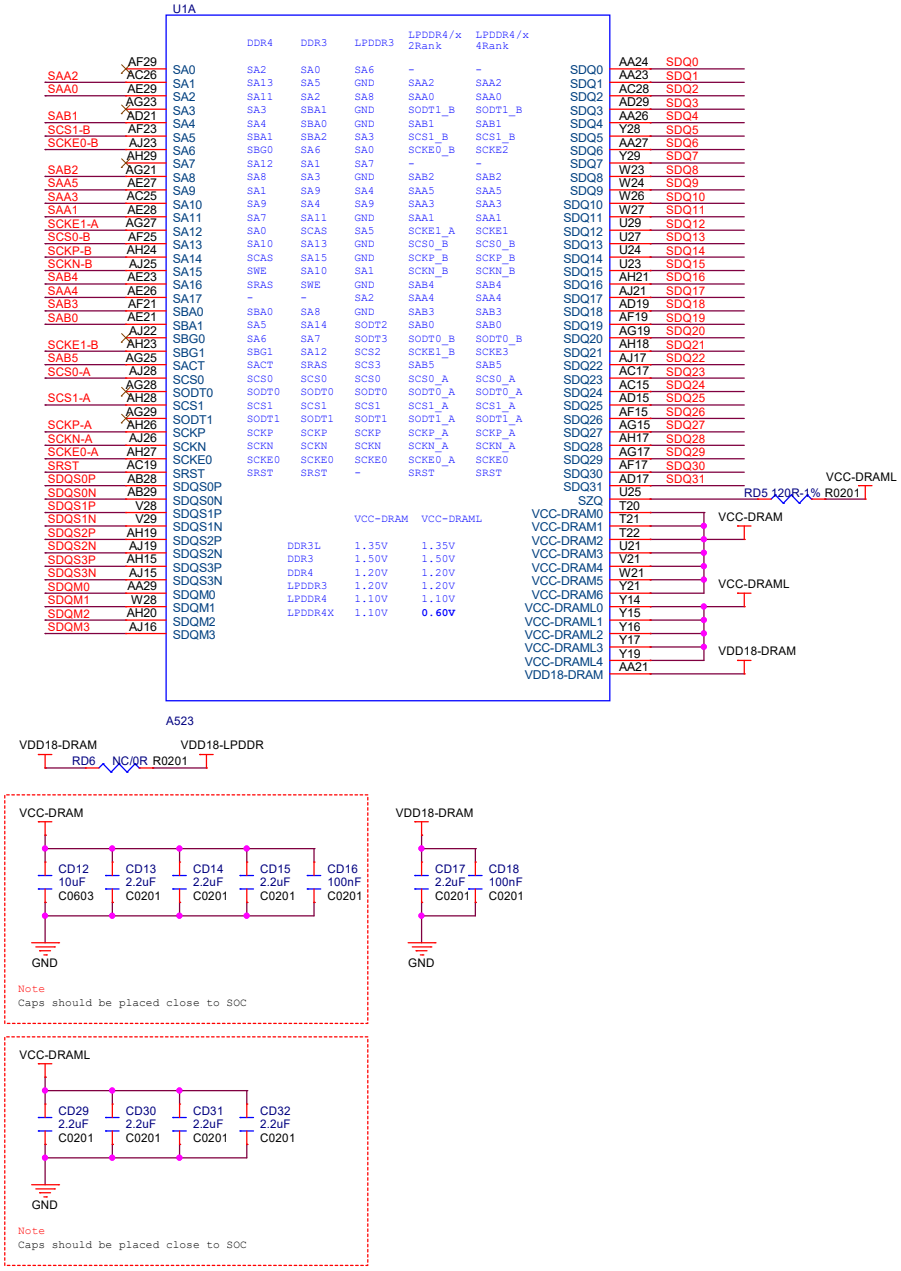

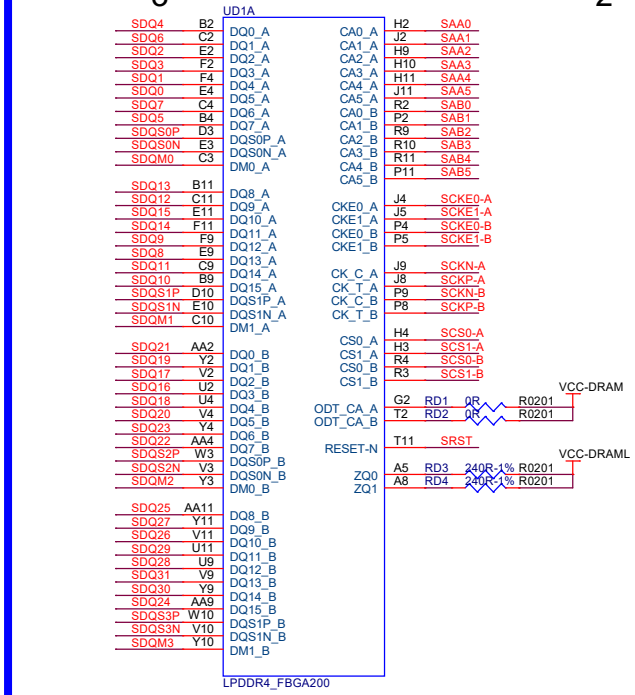

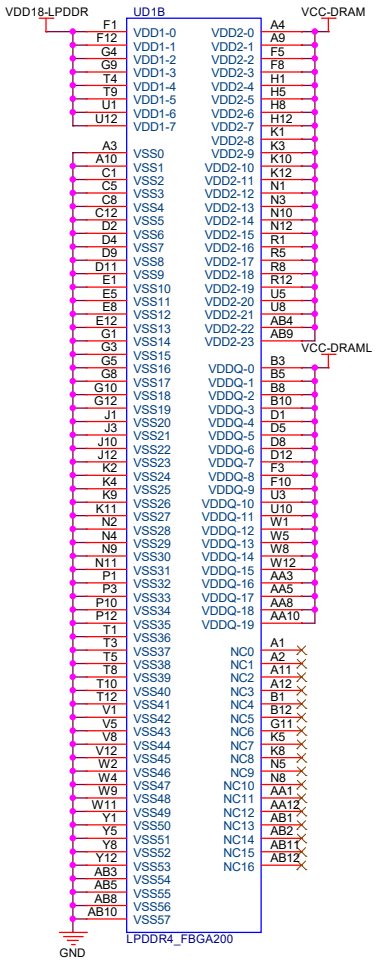

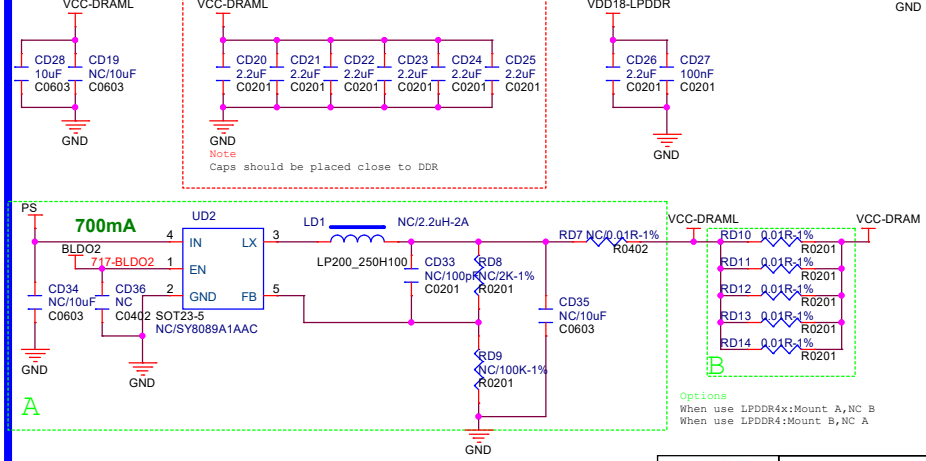

AllWinner Technology Co.,Ltd	
Design Name	A523-REF-LPDDR4-4X-32X1
Size A3	Page Name 01 LPDDR4-4X 32X1
Rev	
Date: Monday, November 14, 2022	Sheet 1 of 2

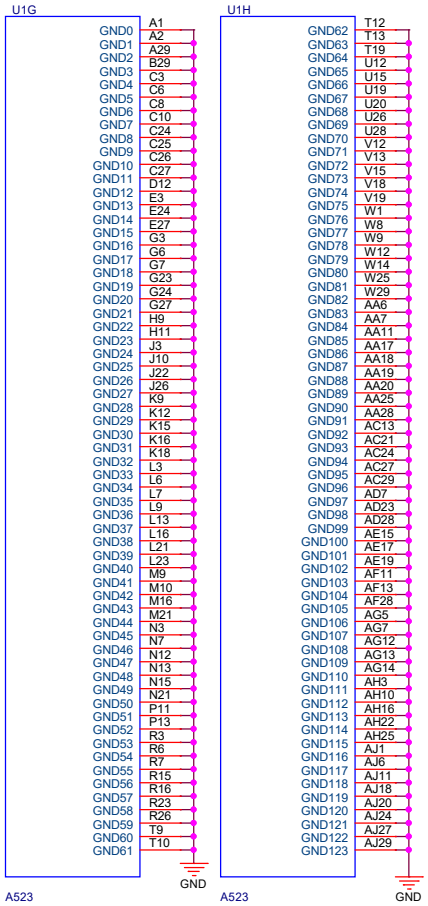

AllWinner Technology Co.,Ltd		
Design Name: A523-REF-LPDDR4-4X-32X1		
Size: A3	Page Name: 02 SOC	Rev
Date: Monday, November 14, 2022	Sheet 2 of 2	