LPDDR3 256BALL

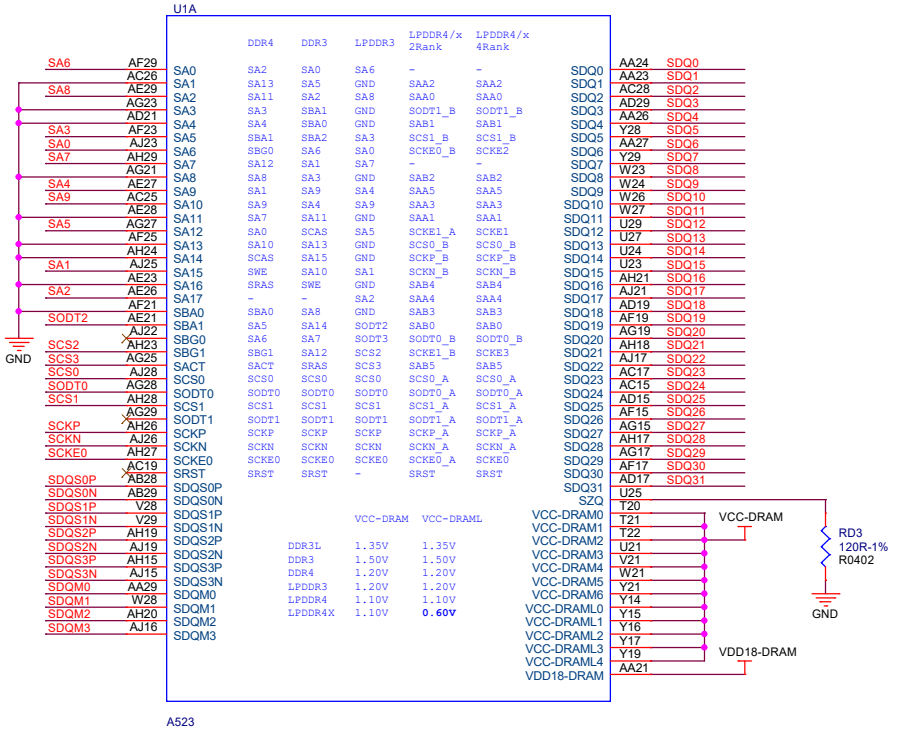

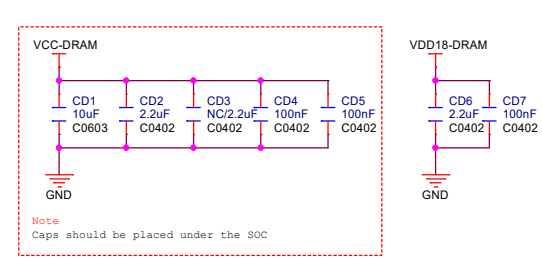

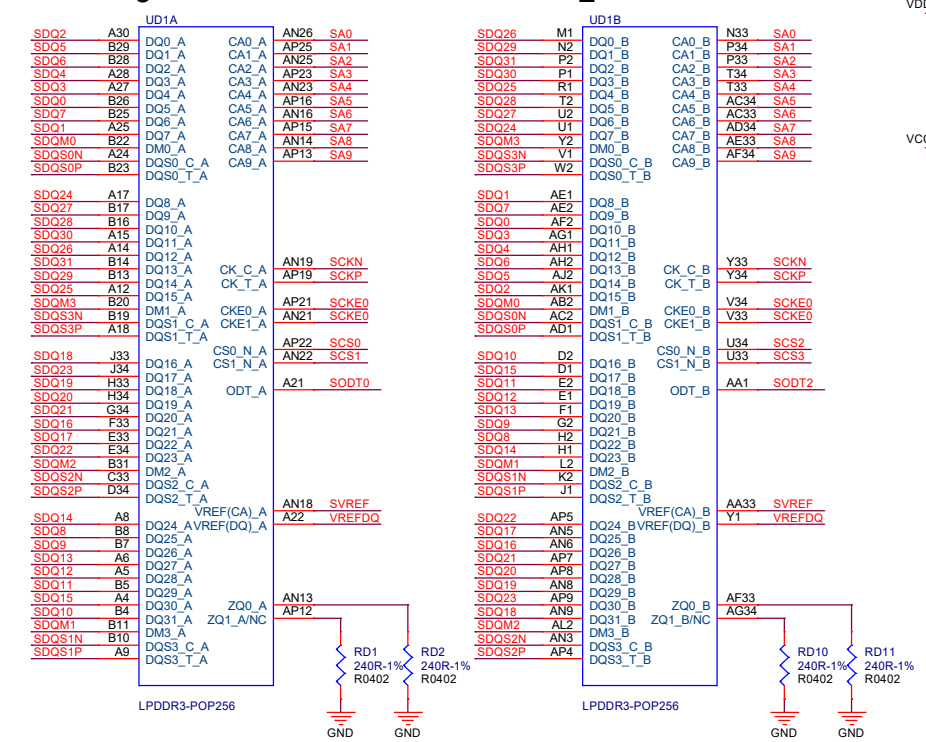

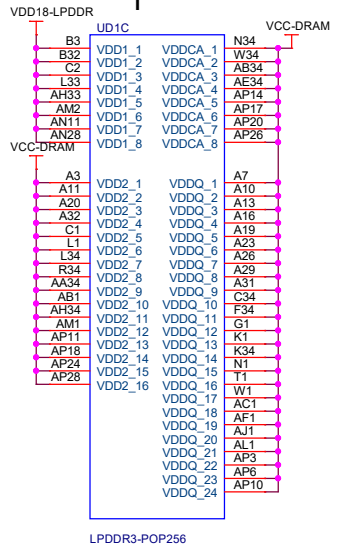

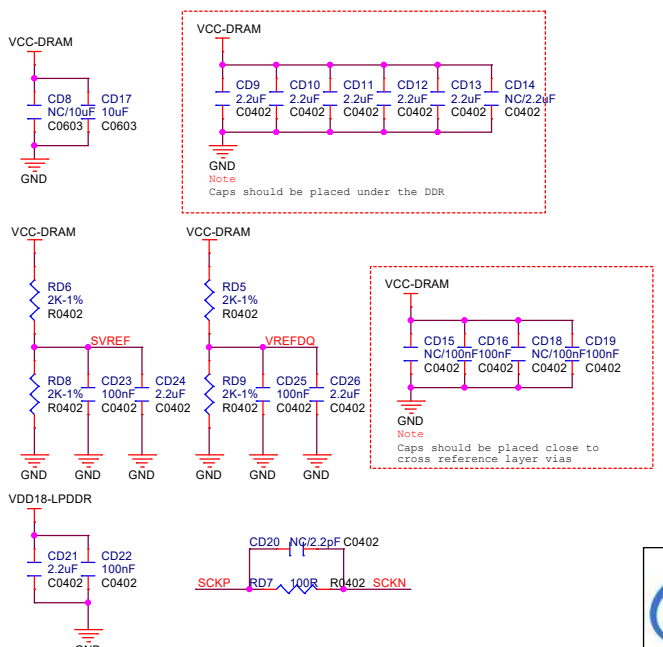

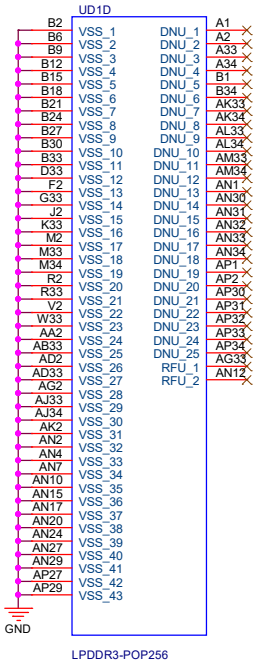

AllWinner Technology Co.,Ltd	
Design Name	A523-REF-LPDDR3-256BALL-64X1
Size A3 / Page Name	01 LPDDR3 64X1 / Rev
Date: Friday, February 17, 2023	Sheet 1 of 2

LPDDR3

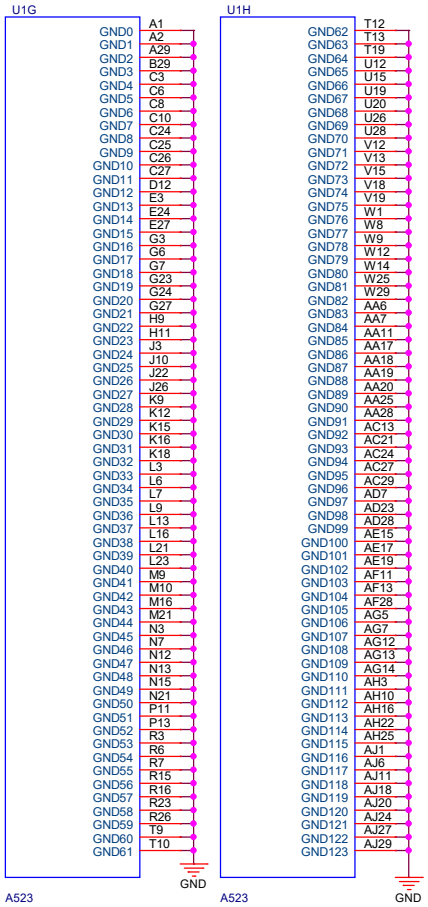

AllWinner Technology Co.,Ltd		
Design Name: A523-REF-LPDDR3-256BALL-64X1		
Size: A3	Page Name: 02 SOC	Rev
Date: Friday, February 17, 2023	Sheet 2 of 2	