VERSION HISTORY

Index:

Page1 01 VERSION HISTORY
Page2 02 BLOCK DIAGRAM
Page3 03 POWER TREE
Page4 04 POWER SEQUENCE
Page5 05 GPIO ASSIGNMENT
Page6 06 TWI&UART MAP
Page7 07 POWER-AXP717C+DCDC
Page8 08 POWER AC-IN/AXP323/ETA6973
Page9 09 A523 DDR
Page10 10 A523 SYS
Page11 11 A523 GPIO
Page12 12 A523 Analog&High-speed
Page13 13 EMMC/NAND
Page14 14 MIPI LCM
Page15 15 EDP LCM
Page16 16 CTP
Page17 17 CAMERA
Page18 18 AUDIO
Page19 19 AUDIO AC107
Page20 20 T-CARD/USB2.0
Page21 21 WIFI/BT SDIO AW869A
Page22 22 WIFI/BT PCIE AP6275P
Page23 23 RGMII
Page24 24 TYPEC-U3/DP/U2/AUDIO
Page25 25 KEY/ADC/DEBUG/IR
Page26 26 Sensor
Page27 27 GPS

Revision	Description	Date
Ver 1.0	Release version	2022-10-24

Description

Note

Option

AllWinner Technology Co.,Ltd

Design Name: A523-EVB-AXP717C-LPDDR4-4X

Size: A3 | Page Name: 01 VERSION HISTORY | Rev

Date: Tuesday, November 15, 2022 | Sheet 1 of 27

BLOCK

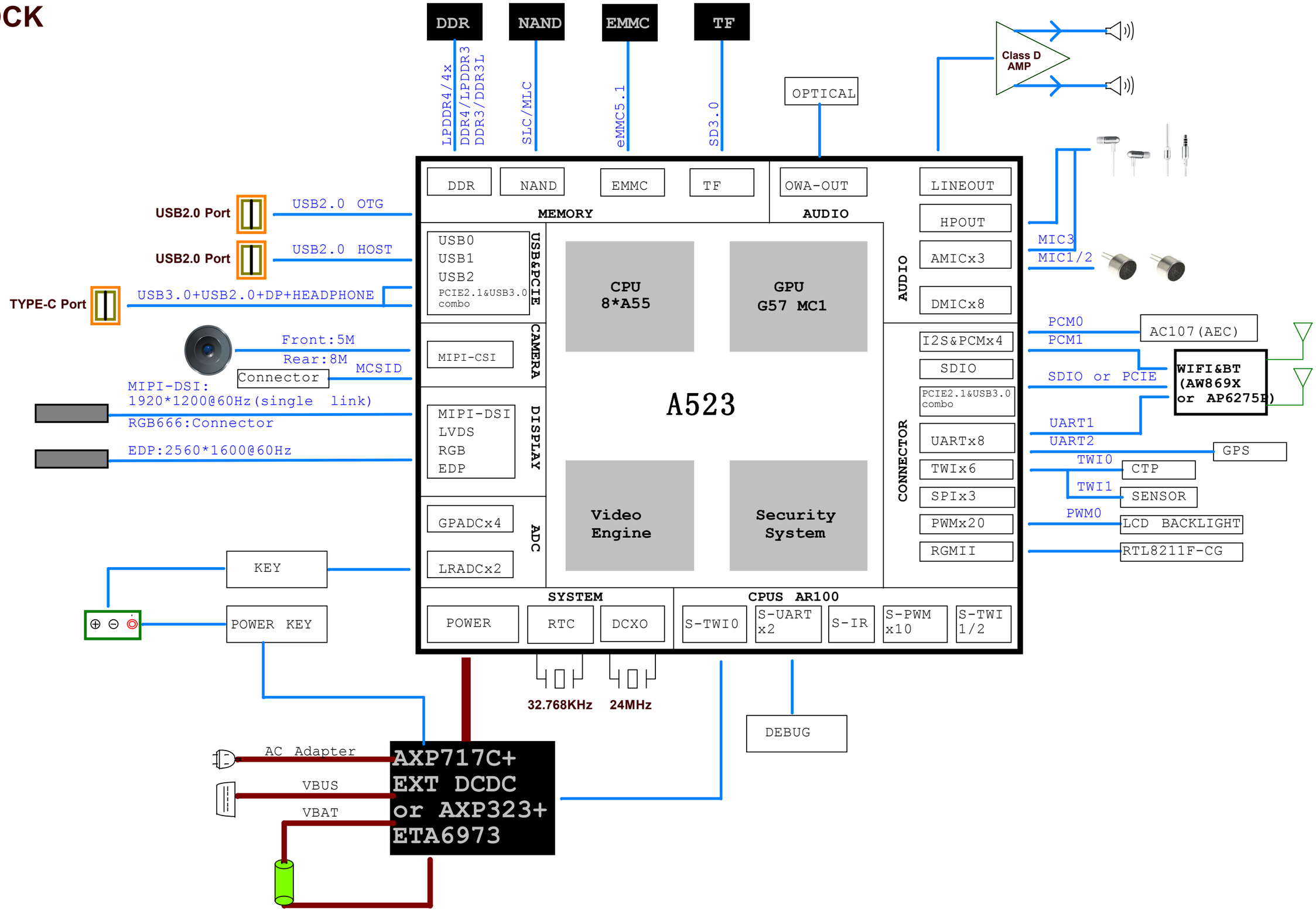

AllWinner Technology Co.,Ltd			
Design Name	A523-EVB-AXP717C-LPDDR4-4X		
Size A3	Page Name 02 BLOCK DIAGRAM		Rev
Date: Tuesday, November 15, 2022	Sheet 2 of 27		

POWER TREE

DEFAULT POWER ON

DEFAULT POWER OFF

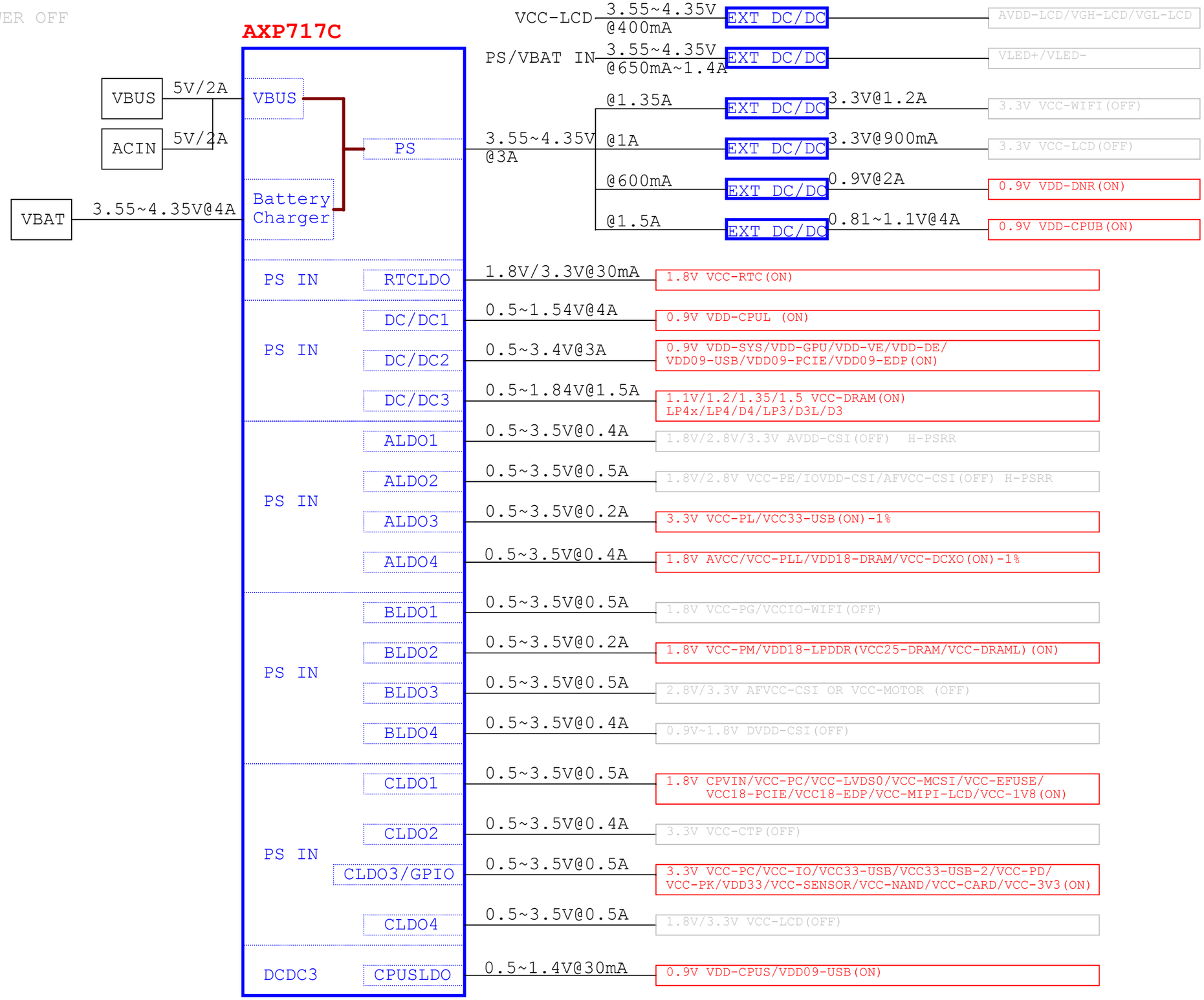

AllWinner Technology Co.,Ltd			
Design Name	A523-EVB-AXP717C-LPDDR4-4X		
Size A3	Page Name 03 POWER TREE		Rev
Date: Tuesday, November 15, 2022	Sheet 3 of 27		

POWER SEQUENCE

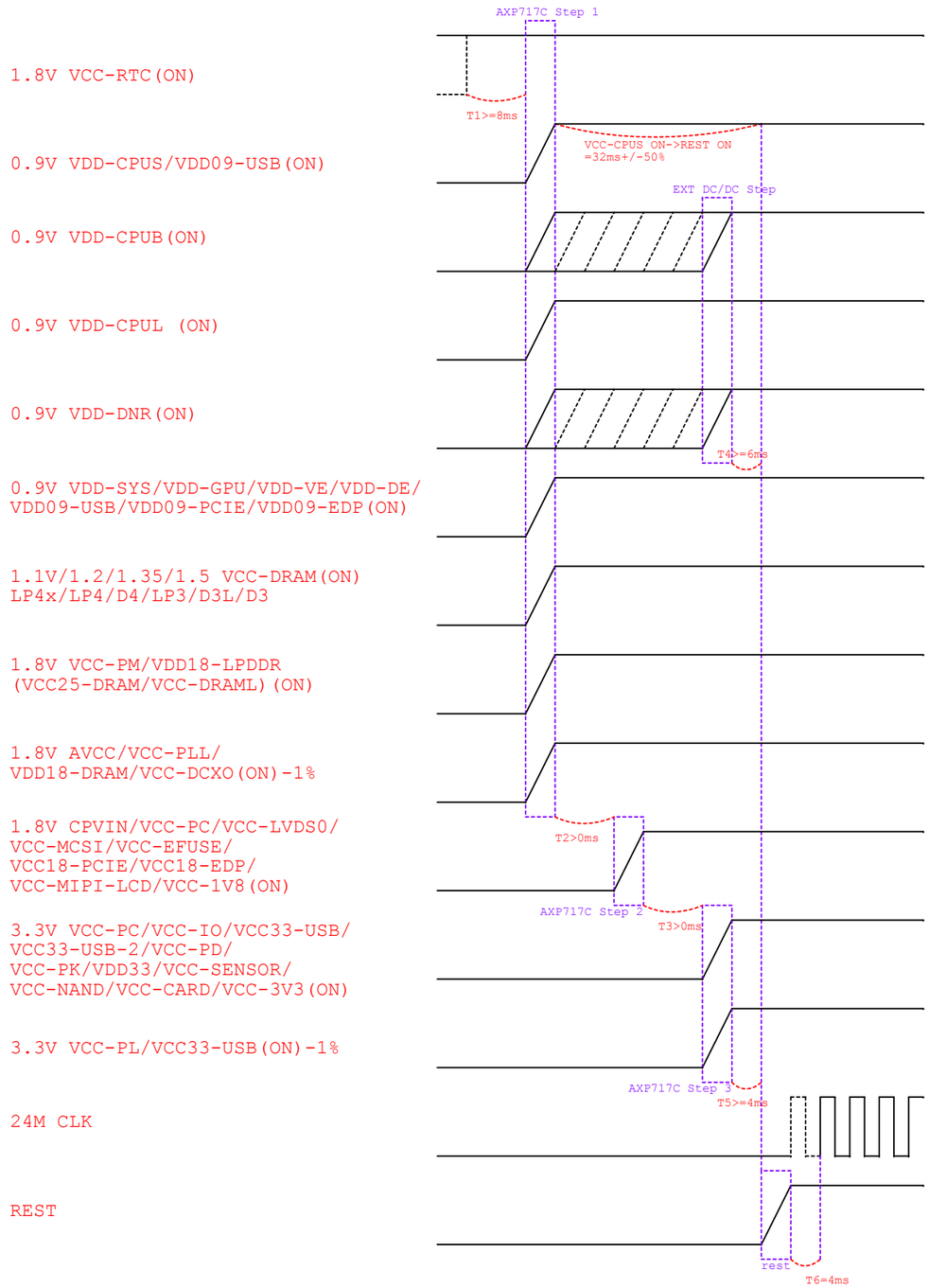

1.VCC-LVDS0 must be ramped before VCC-PD
2.VCC-MCSI must be ramped before VCC-PK
3.VCC-EFUSE must be ramped after VDD-SYS

AllWinner Technology Co.,Ltd		
Design Name: A523-EVB-AXP717C-LPDDR4-4X		
Size: A3	Page Name: 04 POWER SEQUENCE	Rev
Date: Tuesday, November 15, 2022	Sheet 4 of 27	

GPIO ASSIGNMENT

GPIO	Default	Function1	Function2
PB0	UART2-TX	JTAG_MS	
PB1	UART2-RX	JTAG_CK	
PB2	GPS-PWR	JTAG_DO	
PB3	GPS-RESET	JTAG_DI	
PB4	I2S0_MCLK		
PB5	I2S0_BCLK		
PB6	I2S0_LRCK		
PB7	LCD-PIO2		
PB8	I2S0_DIN0		
PB9	UART0_TX		
PB10	UART0_RX		
PB11	TWI5_SCK		
PB12	TWI5_SDA		
PB13	LCD-PIO0	EDP-BL-PWMI	
PB14	LCD-PIO1	EDP-BL-EN	
PC0	NAND_WE	SDC2_DS	
PC1	NAND_ALE	SDC2_RST	
PC2	NAND_CLE		SPI0_MOSI
PC3	NAND_CE1		SPI0_CS0
PC4	NAND_CE0		SPI0_MISO
PC5	NAND_RE	SDC2_CLK	
PC6	NAND_RB0	SDC2_CMD	
PC7	NAND_RB1		SPI0_CS1
PC8	NAND_DQ7	SDC2_D3	
PC9	NAND_DQ6	SDC2_D4	
PC10	NAND_DQ5	SDC2_D0	
PC11	NAND_DQ4	SDC2_D5	
PC12	NAND_DQS		SPI0_CLK
PC13	NAND_DQ3	SDC2_D1	
PC14	NAND_DQ2	SDC2_D6	
PC15	NAND_DQ1	SDC2_D2	SPI0_WP
PC16	NAND_DQ0	SDC2_D7	SPI0_HOLD
PD0	LCD0_D2		
PD1	LCD0_D3		
PD2	LCD0_D4		
PD3	LCD0_D5		
PD4	LCD0_D6		
PD5	LCD0_D7		
PD6	LCD0_D10		
PD7	LCD0_D11		
PD8	LCD0_D12		
PD9	LCD0_D13		
PD10	LCD0_D14	DSI1_DP0	
PD11	LCD0_D15	DSI1_DN0	
PD12	LCD0_D18	DSI1_DP1	
PD13	LCD0_D19	DSI1_DN1	
PD14	LCD0_D20	DSI1_CKP	
PD15	LCD0_D21	DSI1_CKM	
PD16	LCD0_D22	DSI1_DP2	
PD17	LCD0_D23	DSI1_DN2	
PD18	LCD0_CLK	DSI1_DP3	
PD19	LCD0_DE	DSI1_DN3	
PD20	LCD0_HSYNC		
PD21	LCD0_VSYNC		
PD22	LCD-RST		
PD23	LCD-PWM		

GPIO	Default	Function1	Function2
PE0	MCSID-PWDN		
PE1	TWI2-SCK		
PE2	TWI2-SDA		
PE3	MCSID-SCK		
PE4	MCSID-SDA		
PE5	MCSID-MCLK		
PE6	MCSI-STBY-F		
PE7	MCSI-RST-F		
PE8	MCSI-STBY-R		
PE9	MCSI-RST-R		
PE10	MCSID-RESET		
PE11	UART6-TX		
PE12	UART6-RX		
PE13	MCSI-SCK		
PE14	MCSI-SDA		
PE15	MCSI-MCLK		
PF0	SDC0_D1		
PF1	SDC0_D0		
PF2	SDC0_CLK		
PF3	SDC0_CMD		
PF4	SDC0_D3		
PF5	SDC0_D2		
PF6	SDC0-DET		
PG0	SDC1_CLK		
PG1	SDC1_CMD		
PG2	SDC1_D0	PCIE_PERSTn	
PG3	SDC1_D1	PCIE_WAKEn	
PG4	SDC1_D2	PCIE_CLKREQn	
PG5	SDC1_D3		
PG6	UART1_TX		
PG7	UART1_RX		
PG8	UART1_RTS		
PG9	UART1_CTS		
PG10	PG10		
PG11	I2S1_BCLK		
PG12	I2S1_LRCK		
PG13	I2S1_DOUT0		
PG14	I2S1_DIN0		
PH0	CTP-SCK	RGMII0_RXD1/RMII0_RXD1	
PH1	CTP-SDA	RGMII0_RXD0/RMII0_RXD0	
PH2	SENSOR-TWI-SCK	RGMII0_RXCTL/RMII0_CRS_DV	
PH3	SENSOR-TWI-SDA	RGMII0_CLKIN/RMII0_RXER	
PH4	PS-EINT	RGMII0_TXD1/RMII0_TXD1	
PH5	ETA6973-nCE	RGMII0_TXD0/RMII0_TXD0	
PH6	PA-SHDN	RGMII0_TXCK/RMII0_TXCK	
PH7	OWA-OUT	RGMII0_TXCTL/RMII0_TXEN	
PH8	ETA6973-nPG	MIC-GND-SEL	
PH9	CTP-INT	MDC0	
PH10	CTP-RST	MDIO0	
PH11	USB2-SW	DCIDATA	
PH12	ACIN-DET	DCICLK	
PH13	ETA6973-nINT	EPHY0_25	
PH14	USB0-ID	RGMII0_RXD3/RMII0_NULL	
PH15	USB2-SW-EN	RGMII0_RXD2/RMII0_NULL	
PH16	LCD-BL-EN	RGMII0_RXCK/RMII0_NULL	
PH17	DDR-PARA-SEL-GPIO	RGMII0_TXD3/RMII0_NULL	
PH18	CIR_OUT	RGMII0_TXD2/RMII0_NULL	
PH19	CIR_IN	RGMII-RESET	

GPIO	Default	Function1	Function2
PK0	MCSIA_D0N		
PK1	MCSIA_D0P		
PK2	MCSIA_D1N		
PK3	MCSIA_D1P		
PK4	MCSIA_CKN		
PK5	MCSIA_CKP		
PK6	MCSIB_D0N		
PK7	MCSIB_D0P		
PK8	MCSIB_D1N		
PK9	MCSIB_D1P		
PK10	PK10		
PK11	PK11		
PK12	MCSIC_D0N		
PK13	MCSIC_D0P		
PK14	MCSIC_D1N		
PK15	MCSIC_D1P		
PK16	MCSIC_CKN		
PK17	MCSIC_CKP		
PK18	MCSID_D0N		
PK19	MCSID_D0P		
PK20	MCSID_D1N		
PK21	MCSID_D1P		
PK22	MCSID_CKN		
PK23	MCSID_CKP		
PL0	S_TWI0_SCK		
PL1	S_TWI0_SDA		
PL2	CPUS-TX		
PL3	CPUS-RX		
PL4	GS-INT	S_JTAG_MS	I2S0-BCLK
PL5	GYRO-INT1	S_JTAG_CK	I2S0-LRCK
PL6	GYRO-INT2	S_JTAG_DO	I2S0-DOUT0
PL7	EINT-HAL	S_JTAG_DI	I2S0-DIN0
PL8	LED-EN	D_JTAG_MS	I2S0-MCLK
PL9	USB1-DRVVBUS	D_JTAG_CK	DMIC-CLK
PL10	USB-VBUSDET	D_JTAG_DO	DMIC-DATA0
PL11	VCC-WIFI-PWREN	D_JTAG_DI	DMIC-DATA1
PL12	USB0-DRVVBUS	DSP-TX	DMIC-DATA2
PL13	CC-INT	DSP-RX	DMIC-DATA3
PM0	WL-WAKE-AP		
PM1	WL-REG-ON		
PM2	BT-RESETN		
PM3	AP-WAKE-BT		
PM4	BT-WAKE-AP		
PM5	S-PWM-9		

TWI MAP

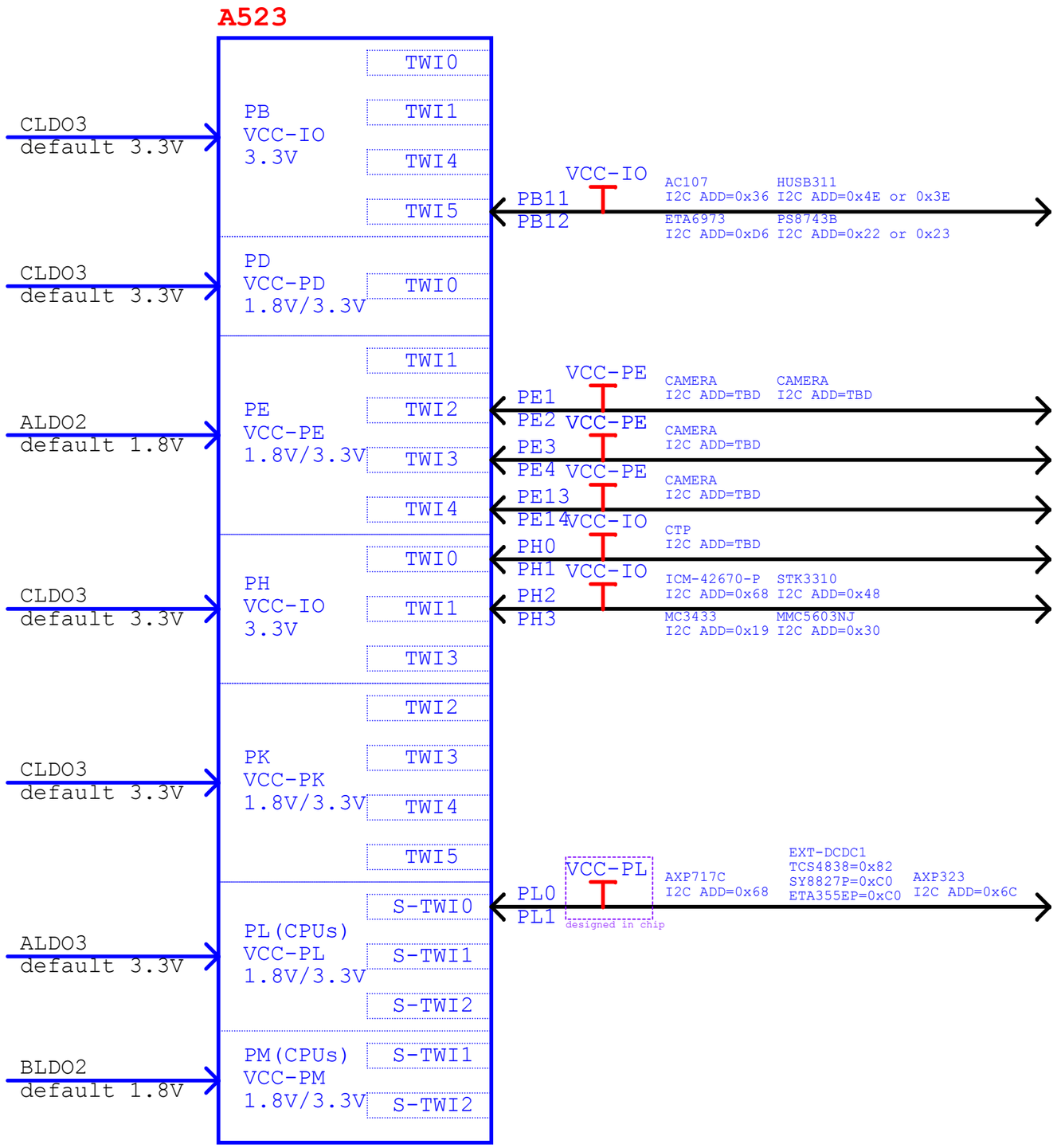

UART MAP

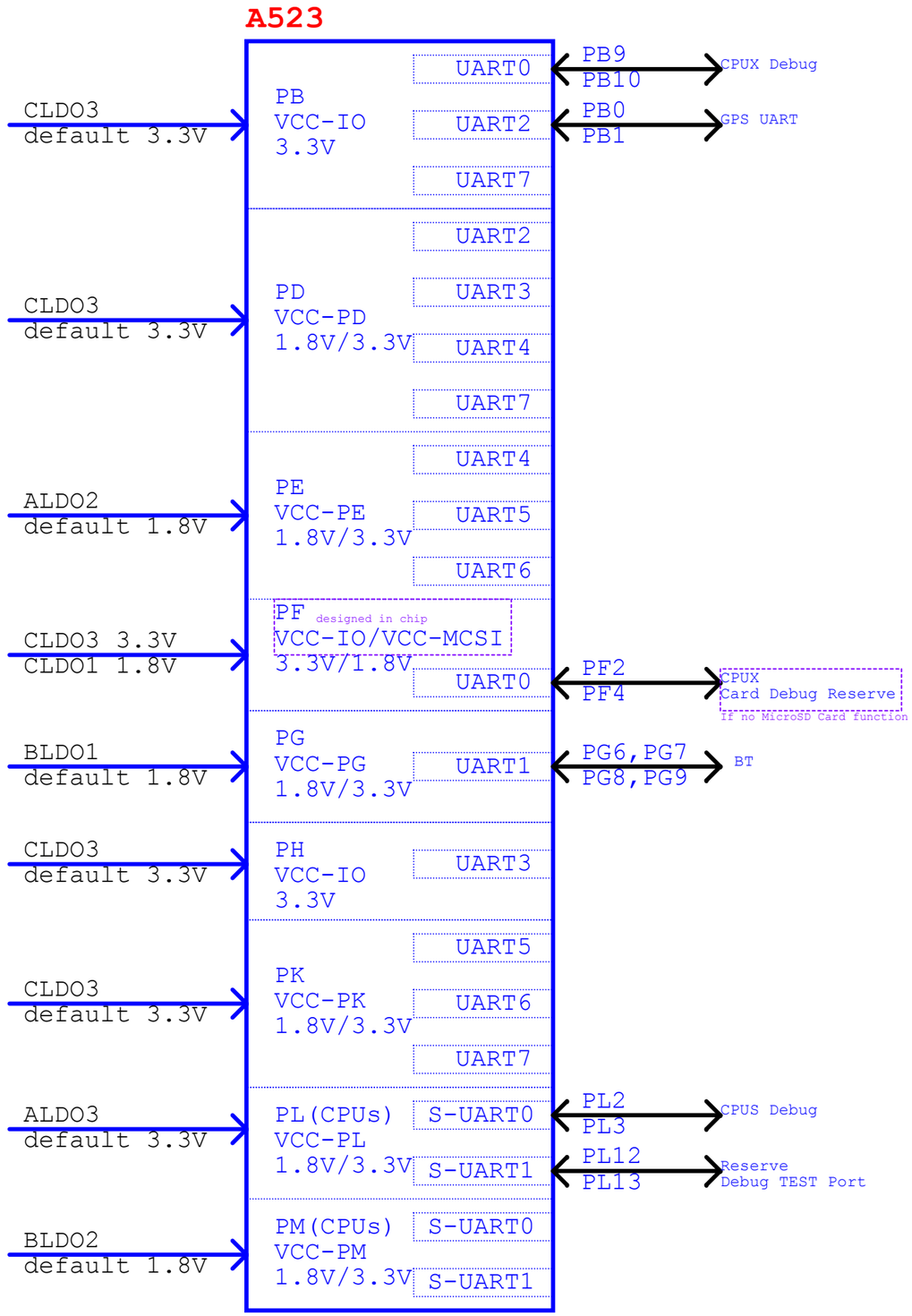

AllWinner Technology Co.,Ltd		
Design Name: A523-EVB-AXP717C-LPDDR4-4X		
Size: A3	Page Name: 06 TWI&UART MAP	Rev
Date: Tuesday, November 15, 2022	Sheet 6 of 27	

BAT

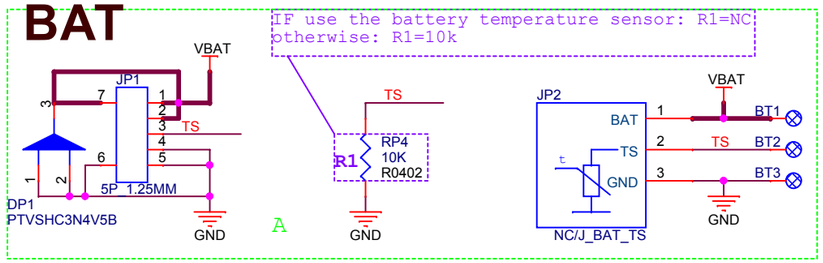

PMIC

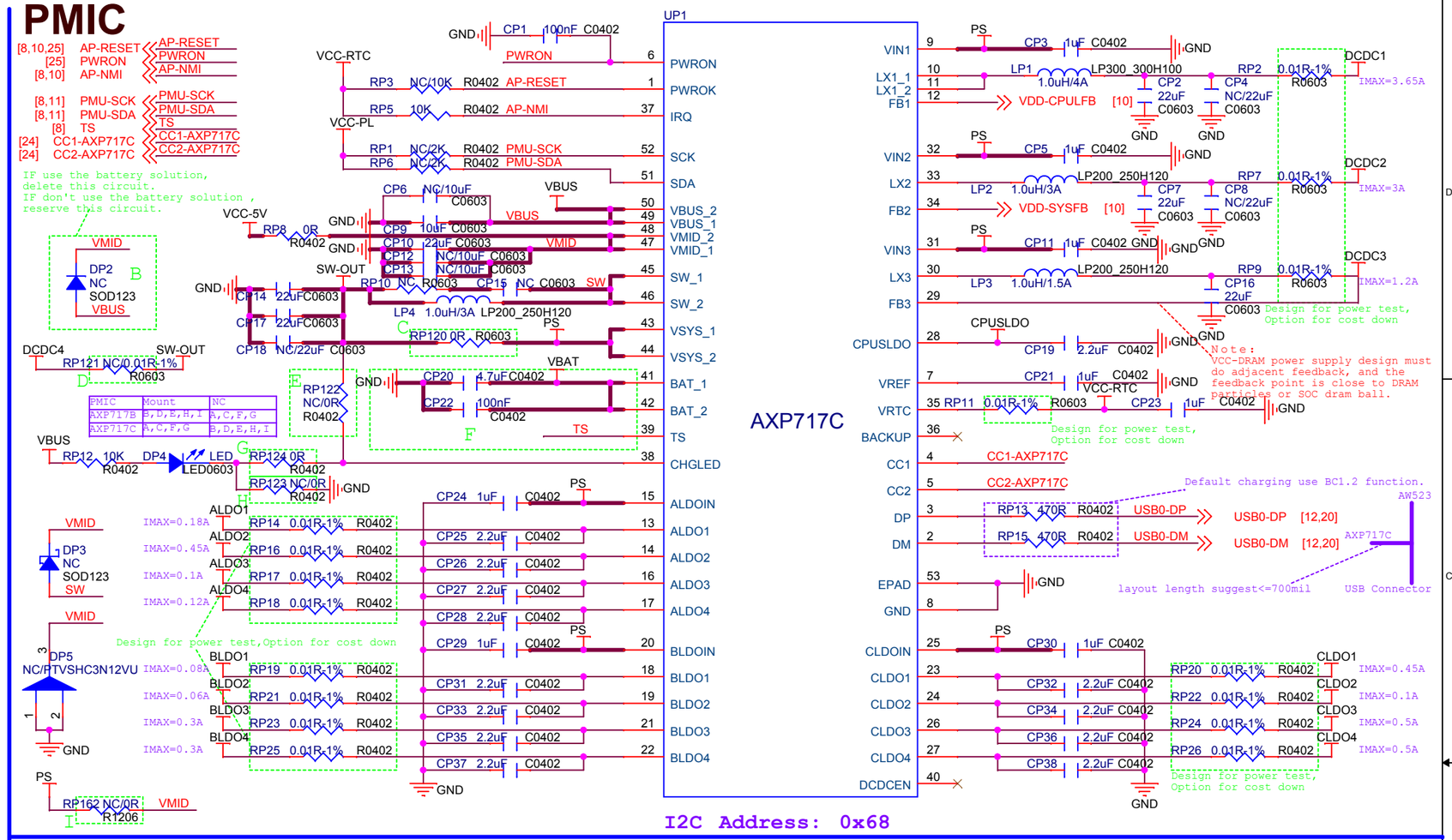

EXT DCDC

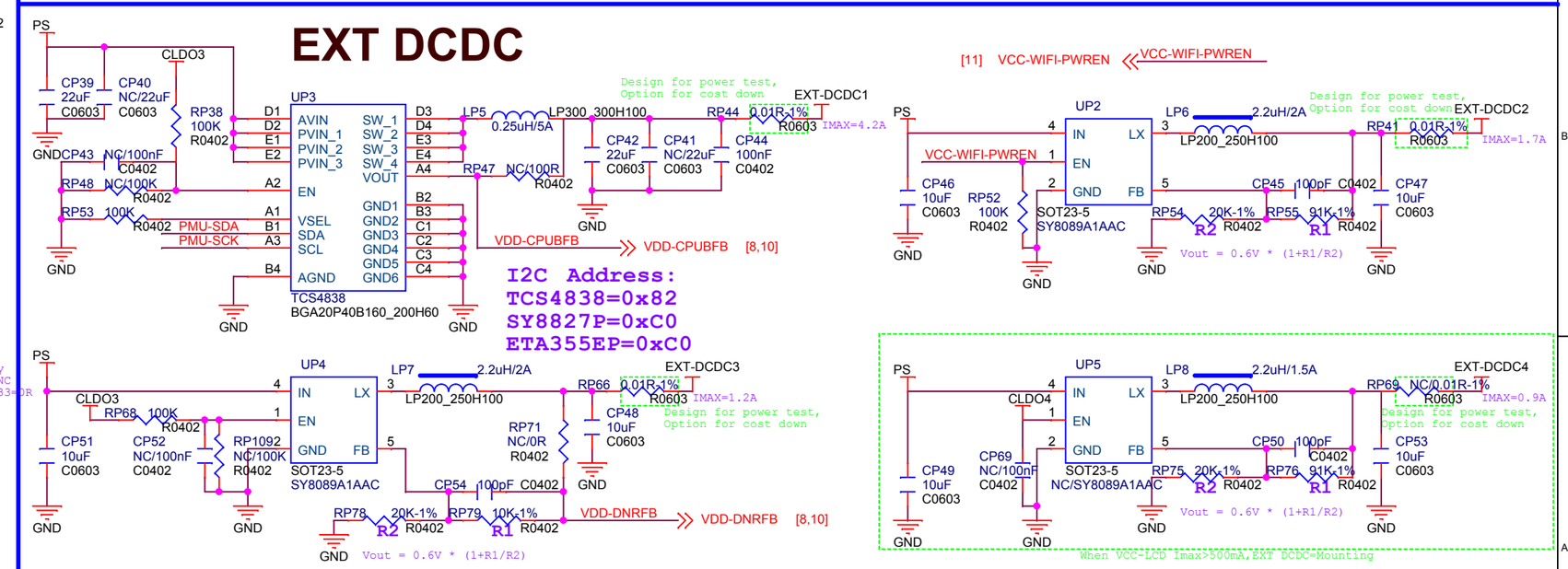

AllWinner Technology Co.,Ltd		
Design Name: A523-EVB-AXP717C-LPDDR4-4X		
Size: A3	Page Name: 07 POWER-AXP717C+DCDC	Rev
Date: Tuesday, November 15, 2022	Sheet 7 of 27	

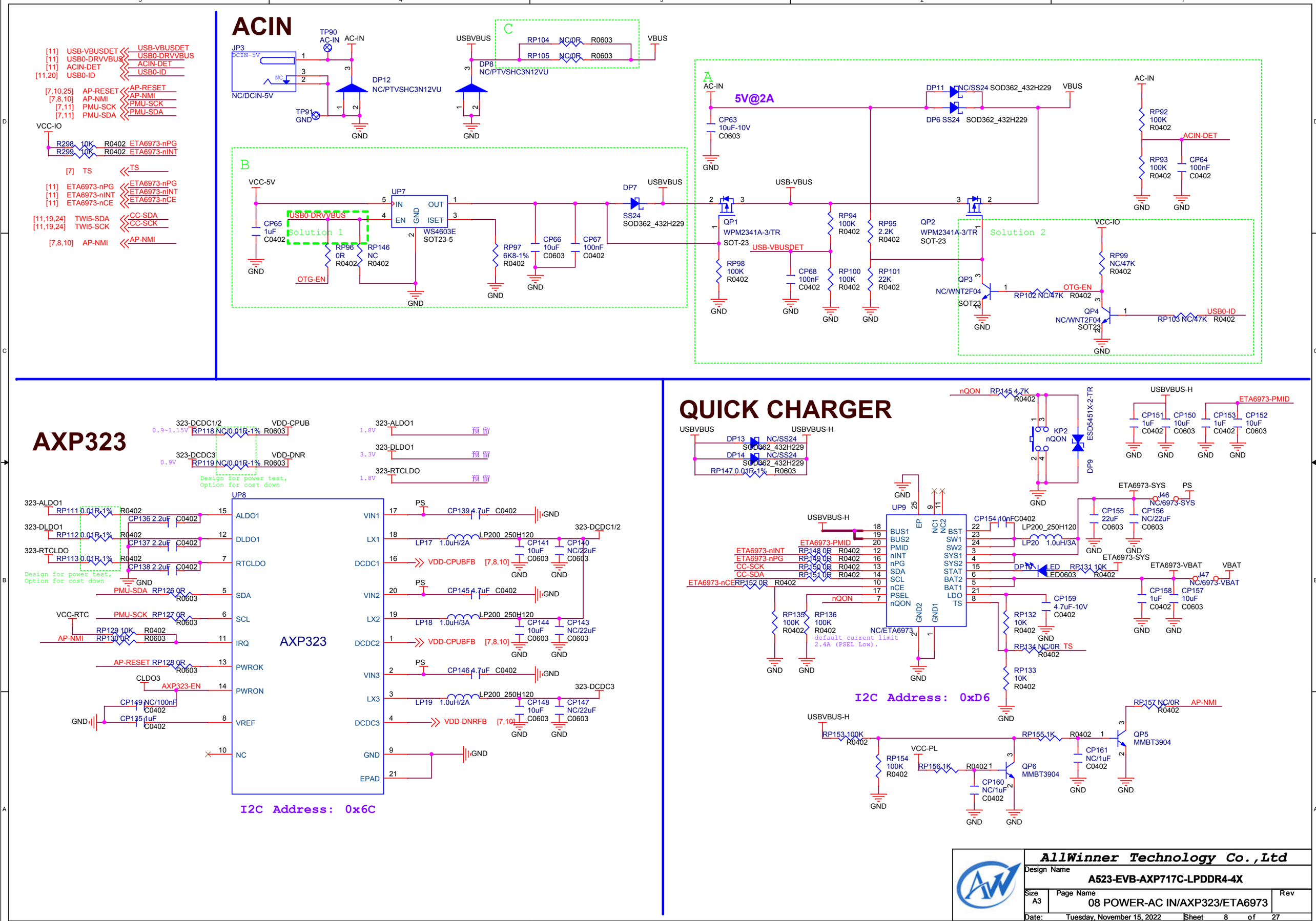
ACIN
AXP323
QUICK CHARGER
5V@2A
Solution 1
Solution 2
UP8
AXP323
I2C Address: 0x6C
UP9
I2C Address: 0xD6
AllWinner Technology Co.,Ltd
Design Name
A523-EVB-AXP717C-LPDDR4-4X
Size
A3
Page Name
08 POWER-AC IN/AXP323/ETA6973
Rev
Date:
Tuesday, November 15, 2022
Sheet 8 of 27

LPDDR4-4X

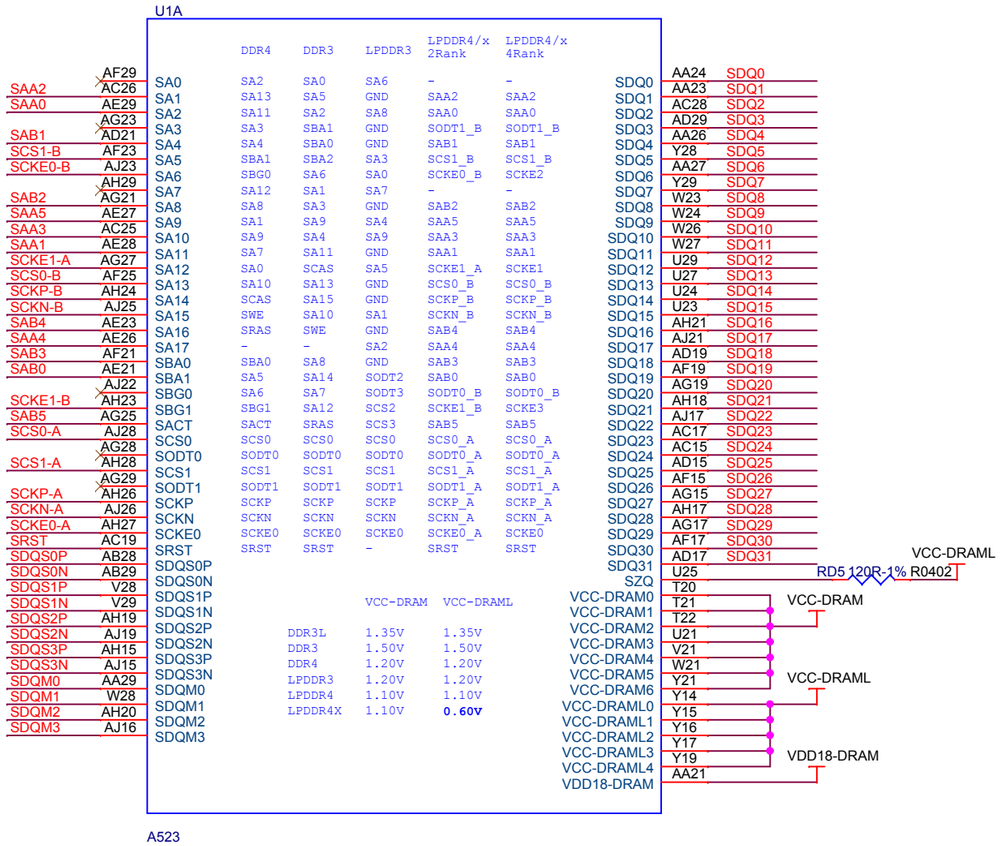

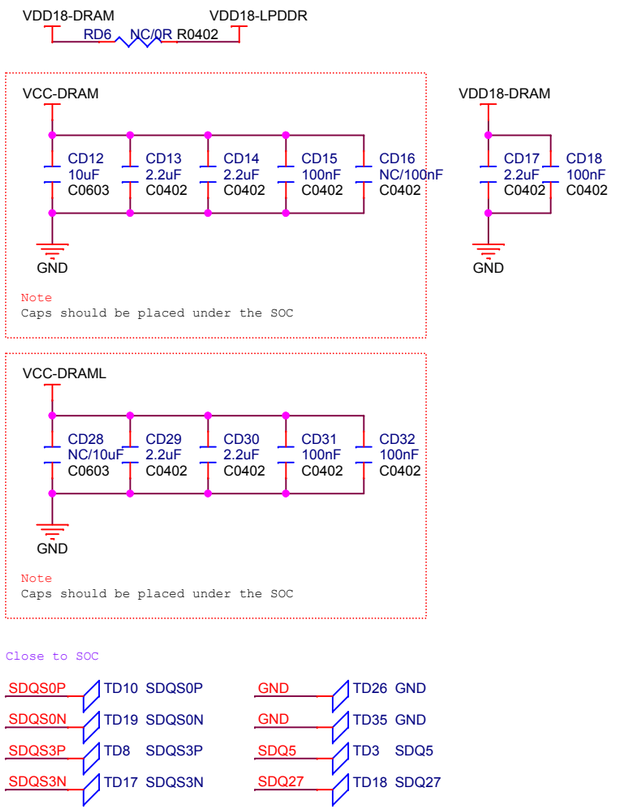

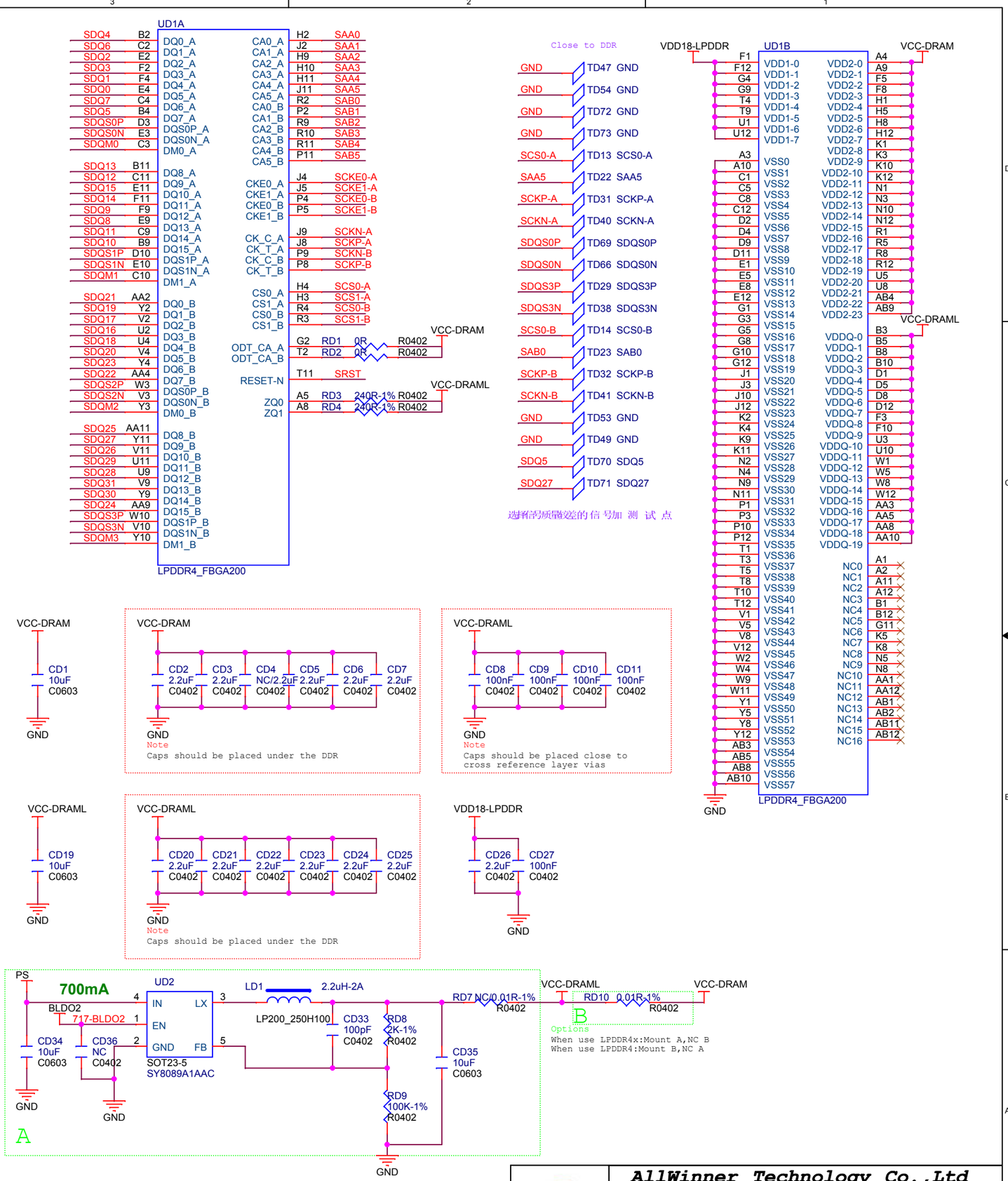

AllWinner Technology Co.,Ltd		
Design Name: A523-EVB-AXP717C-LPDDR4-4X		
Size: A3	Page Name: 09 A523 DDR	Rev
Date: Tuesday, November 15, 2022	Sheet 9 of 27	

SYS

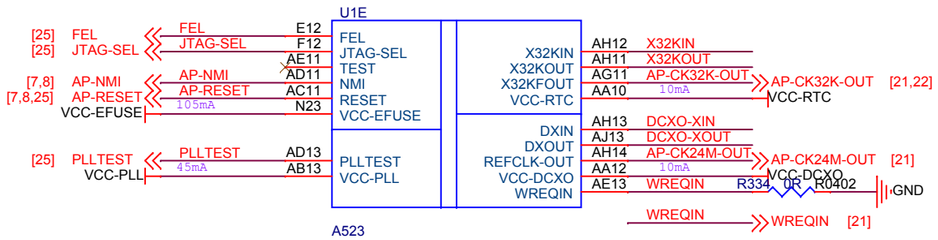

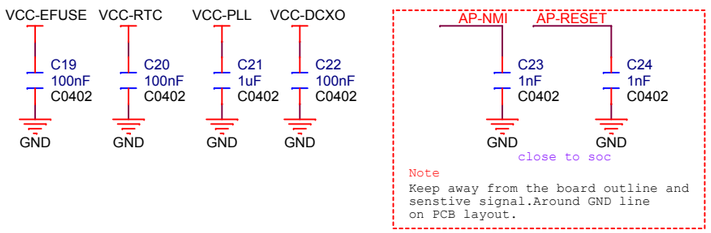

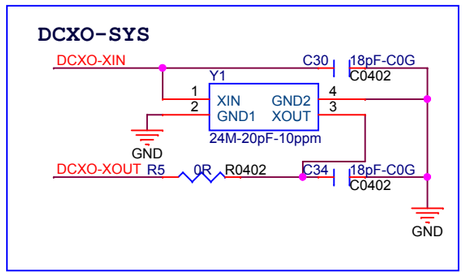

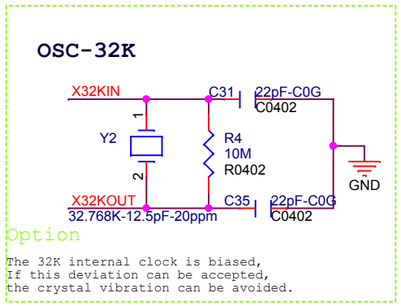

CORE POWER

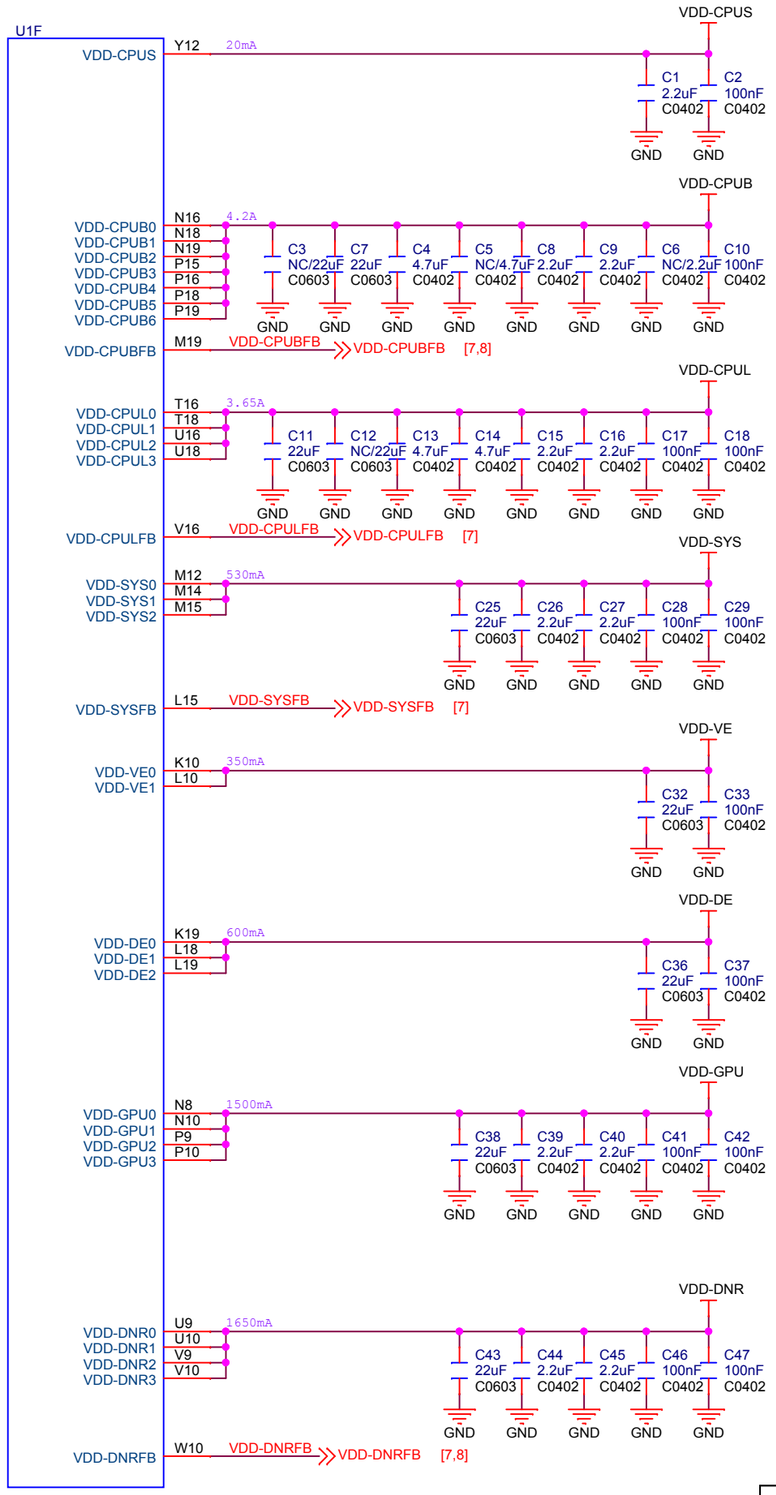

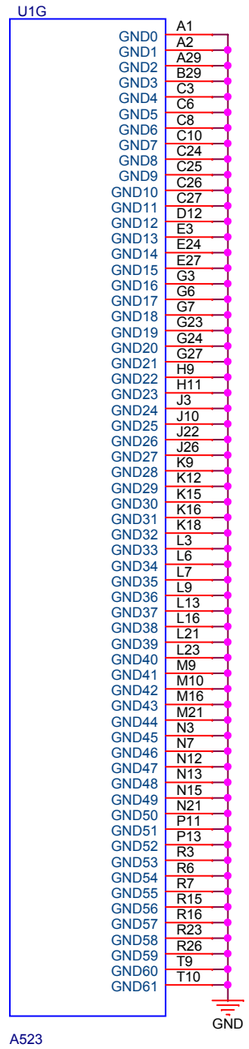

AllWinner Technology Co.,Ltd		
Design Name: A523-EVB-AXP717C-LPDDR4-4X		
Size: A3	Page Name: 10 A523 SYS	Rev
Date: Tuesday, November 15, 2022	Sheet 10 of 27	

GPIO

U1B

Pin	Signal	Net	Pin	Signal	Net
[25,27]	CPUX-TMS	CPUX-TMS	[25,27]	GPS-TX	CPUX-TMS J24
[25,27]	CPUX-TCK	CPUX-TCK	[25,27]	GPS-RX	CPUX-TCK J25
[25,27]	CPUX-TDO	CPUX-TDO	[25,27]	GPS-PWR	CPUX-TDO H27
[25,27]	CPUX-TDI	CPUX-TDI	[25,27]	GPS-RESET	CPUX-TDI H28
			[19]	I2S0-MCLK	J27
			[19]	I2S0-BCLK	J28
			[19]	I2S0-LRCK	J29
			[14]	LCD-PIO2	K27
			[19]	I2S0-DIN	K28
			[25]	CPUX-TX	L24
			[25]	CPUX-RX	L25
			[8,19,24]	TWI5-SCK	L26
			[8,19,24]	TWI5-SDA	L27
[15]	PB13	PB13	[14]	LCD-PIO0	R320 0R R0402 PB13 L28
[15]	PB14	PB14	[14]	LCD-PIO1	R321 0R R0402 PB14 L29

PB0/UART2-TX/SPI2-CS0/JTAG-MS/LCD0-D0/PWM-6/PB-EINT0
PB1/UART2-RX/SPI2-CLK/JTAG-CK/LCD0-D1/PWM-7/PB-EINT1
PB2/UART2-RTS/SPI2-MOSI/JTAG-DO/LCD0-D8/CAN-TX0/PB-EINT2
PB3/UART2-CTS/SPI2-MISO/JTAG-DI/LCD0-D9/CAN-RX0/PB-EINT3
PB4/TWI1-SCK/I2S0-MCLK/TRACE-DATA2/PWM-8/HDMI-SCL/PB-EINT4
PB5/TWI1-SDA/I2S0-BCLK/TRACE-CLK/PWM-9/HDMI-SDA/PB-EINT5
PB6/I2S0-LRCK/TRACE-DATA0/PWM-10/HDMI-CEC/PB-EINT6
PB7/OWA-IN/I2S0-DOUT0/I2S0-DIN1/LCD0-D16/PWM-11/PB-EINT7
PB8/OWA-OUT/I2S0-DIN0/I2S0-DOUT1/LCD0-D17/PWM-0/PB-EINT8
PB9/UART0-TX/TWI0-SCK/TRACE-DATA1/I2S0-DIN2/I2S0-DOUT2/PB-EINT9
PB10/UART0-RX/TWI0-SDA/PWM-1/I2S0-DIN3/I2S0-DOUT3/PB-EINT10
PB11/TWI5-SCK/UART7-RTS/SPI1-CS0/PWM-2/PB-EINT11
PB12/TWI5-SDA/UART7-CTS/SPI1-CLK/PWM-3/PB-EINT12
PB13/TWI4-SCK/UART7-TX/SPI1-MOSI/PWM-4/PB-EINT13
PB14/TWI4-SDA/UART7-RX/SPI1-MISO/PWM-5/PB-EINT14

Pin	Signal	Net	Pin	Signal	Net
[13]	eMMC-DS	eMMC-DS			NWE R24
[13]	eMMC-RST	eMMC-RST			NALE T27
[13]	eMMC-CLK				NCLE N26
[13]	eMMC-CMD				NCE1 N25
[13]	eMMC-D[7..0]				NCE0 N24
		eMMC-CLK	NRE	RM133R R0201	T28
		eMMC-CMD	close to soc		NRB0 R29
[13]	NWE				NRB1 R25
[13]	NALE	eMMC-D3			NDQ7 R28
[13]	NCLE	eMMC-D4			NDQ6 R27
[13]	NRE	eMMC-D0			NDQ5 P28
[13]	NDQS	eMMC-D5			NDQ4 P27
[13]	NCE0				NDQS N29
[13]	NCE1	eMMC-D1			NDQ3 N28
[13]	NRB0	eMMC-D6			NDQ2 N27
[13]	NRB1	eMMC-D2			NDQ1 M28
[13]	NDQ[7..0]	eMMC-D7			NDQ0 M27
					60mA N22

PC0/NAND-WE/SDC2-DS/PC-EINT0
PC1/NAND-ALE/SDC2-RST/PC-EINT1
PC2/NAND-CLE/SPI0-MOSI/SPIF-MOSI/PC-EINT2
PC3/NAND-CE1/SPI0-CS0/SPIF-CS0/PC-EINT3
PC4/NAND-CE0/SPI0-MISO/SPIF-MISO/PC-EINT4
PC5/NAND-RE/SDC2-CLK/PC-EINT5
PC6/NAND-RB0/SDC2-CMD/PC-EINT6
PC7/NAND-RB1/SPI0-CS1/SPIF-DQS/PC-EINT7
PC8/NAND-DQ7/SDC2-D3/SPIF-D7/PC-EINT8
PC9/NAND-DQ6/SDC2-D4/SPIF-D6/PC-EINT9
PC10/NAND-DQ5/SDC2-D0/SPIF-D5/PC-EINT10
PC11/NAND-DQ4/SDC2-D5/SPIF-D4/PC-EINT11
PC12/NAND-DQS/SPI0-CLK/SPIF-CLK/PC-EINT12
PC13/NAND-DQ3/SDC2-D1/PC-EINT13
PC14/NAND-DQ2/SDC2-D6/PC-EINT14
PC15/NAND-DQ1/SDC2-D2/SPI0-WP/SPIF-WP/PC-EINT15
PC16/NAND-DQ0/SDC2-D7/SPI0-HOLD/SPIF-HOLD/PC-EINT16
VCC-PC

Design for power test, Option for cost down

VCC-PC-SOC
VCC-PC RP161 0.01R 1% R0603

Pin	Signal	Net	Pin	Signal	Net
[14]	LCD-D2				A24
[14]	LCD-D3				B24
[14]	LCD-D4				A25
[14]	LCD-D5				B25
[14]	LCD-D6				A26
[14]	LCD-D7				B26
[14]	LCD-D10				A27
[14]	LCD-D11				B27
[14]	LCD-D12				A28
[14]	LCD-D13				B28
[14]	MIPI-DSI1-DP0				C28
[14]	MIPI-DSI1-DN0				C29
[14]	MIPI-DSI1-DP1				D28
[14]	MIPI-DSI1-DN1				D29
[14]	MIPI-DSI1-CKP				E28
[14]	MIPI-DSI1-CKN				E29
[14]	MIPI-DSI1-DP2	PD16			E26
[14]	MIPI-DSI1-DN2	PD17			E25
[14]	MIPI-DSI1-DP3				F29
[14]	MIPI-DSI1-DN3				F28
[14]	LCD-HSYNC				G28
[14]	LCD-VSYNC				G29
[14]	LCD-RST				G25
[14]	LCD-PWM				G26
		VCC-PD			150mA J23
		VCC-LVDS0			60mA K21

TP71 TEST PD16
TP72 TEST PD17

PD0/LCD0-D2/LVDS0-D0P/DSI0-D0P/PWM-0/PD-EINT0
PD1/LCD0-D3/LVDS0-D0N/DSI0-D0N/PWM-1/PD-EINT1
PD2/LCD0-D4/LVDS0-D1P/DSI0-D1P/PWM-2/PD-EINT2
PD3/LCD0-D5/LVDS0-D1N/DSI0-D1N/PWM-3/PD-EINT3
PD4/LCD0-D6/LVDS0-D2P/DSI0-CKP/PWM-4/PD-EINT4
PD5/LCD0-D7/LVDS0-D2N/DSI0-CKN/PWM-5/PD-EINT5
PD6/LCD0-D10/LVDS0-CKP/DSI0-D2P/PWM-6/PD-EINT6
PD7/LCD0-D11/LVDS0-CKN/DSI0-D2N/PWM-7/PD-EINT7
PD8/LCD0-D12/LVDS0-D3P/DSI0-D3P/PWM-8/PD-EINT8
PD9/LCD0-D13/LVDS0-D3N/DSI0-D3N/PWM-9/PD-EINT9
PD10/LCD0-D14/LVDS1-D0P/DSI1-D0P/PWM-10/SPI1-CS0/DBI-CSX/PD-EINT10
PD11/LCD0-D15/LVDS1-D0N/DSI1-D0N/PWM-11/SPI1-CLK/DBI-SCLK/PD-EINT11
PD12/LCD0-D18/LVDS1-D1P/DSI1-D1P/PWM-12/SPI1-MOSI/DBI-SDO/PD-EINT12
PD13/LCD0-D19/LVDS1-D1N/DSI1-D1N/PWM-13/SPI1-MISO/DBI-SDI/DBI-TE/DBI-DCX/PD-EINT13
PD14/LCD0-D20/LVDS1-D2P/DSI1-CKP/PWM-14/UART3-TX/PD-EINT14
PD15/LCD0-D21/LVDS1-D2N/DSI1-CKN/PWM-15/UART3-RX/PD-EINT15
PD16/LCD0-D22/LVDS1-CKP/DSI1-D2P/PWM-16/UART3-RTS/PD-EINT16
PD17/LCD0-D23/LVDS1-CKN/DSI1-D2N/PWM-17/UART3-CTS/PD-EINT17
PD18/LCD0-CLK/LVDS1-D3P/DSI1-D3P/PWM-18/UART4-TX/PD-EINT18
PD19/LCD0-DE/LVDS1-D3N/DSI1-D3N/PWM-19/UART4-RX/PD-EINT19
PD20/LCD0-HSYNC/PWM-2/UART2-TX/UART7-RTS/UART4-RTS/PD-EINT20
PD21/LCD0-VSYNC/PWM-3/UART2-RX/UART7-CTS/UART4-CTS/PD-EINT21
PD22/PWM-1/SPI1-HOLD/DBI-DCX/DBI-WRX/UART2-RTS/UART7-TX/TWI0-SCK/PD-EINT22
PD23/PWM-0/SPI1-WP/DBI-TE/UART2-CTS/UART7-RX/TWI0-SDA/PD-EINT23
VCC-PD
VCC-LVDS0

VCC-PE
R328 2K R0402 PE1
R329 2K R0402 PE2

close to soc

Pin	Signal	Net	Pin	Signal	Net
					RV5633R R0402 J1
[17]	MCSI-MCLK-F				
[17]	MCSI-SCK-F				R372 0R R0402 PE1 J2
[17]	MCSI-SDA-F				R373 0R R0402 PE2 K2
[17]	MCSID-SCK				K1
[17]	MCSID-SDA				L1
[17]	MCSID-MCLK				RV2 33R R0402 L2
[17]	MCSI-STBY-F				M1
[17]	MCSI-RST-F				M2
[17]	MCSI-STBY-R				J4
[17]	MCSI-RST-R				J5
[25]	PE10				N1
[17]	MCSID-RESET				N2
[17]	MCSID-PWDN				L4
[17]	MCSI-SCK-R				L5
[17]	MCSI-SDA-R				N4
[17]	MCSI-MCLK-R				RV1 33R R0402 N5
					J6

[25] PE1 PE1
[25] PE2 PE2

PE0/MCSI0-MCLK/PE-EINT0
PE1/TWI2-SCK/UART4-TX/PE-EINT1
PE2/TWI2-SDA/UART4-RX/PE-EINT2
PE3/TWI3-SCK/UART4-RTS/PE-EINT3
PE4/TWI3-SDA/UART4-CTS/PE-EINT4
PE5/MCSI1-MCLK/PLL-LOCK-DBG/I2S2-MCLK/LEDC/PE-EINT5
PE6/I2S2-BCLK/LCD0-TRIG/NCSI-D8/PE-EINT6
PE7/I2S2-LRCK/LCD1-TRIG/NCSI-D9/PE-EINT7
PE8/I2S2-DOUT0/LCD2-TRIG/NCSI-D10/PE-EINT8
PE9/I2S2-DIN0/NCSI-D11/PE-EINT9
PE10/MCSI3-MCLK/PWM-3/NCSI-D12/PE-EINT10
PE11/TWI1-SCK/UART5-RTS/SPI2-CS0/UART6-TX/NCSI-D13/PE-EINT11
PE12/TWI1-SDA/UART5-CTS/SPI2-CLK/UART6-RX/NCSI-D14/PE-EINT12
PE13/TWI4-SCK/UART5-TX/SPI2-MOSI/UART6-RTS/CSI0-XVS-FSYNC/PE-EINT13
PE14/TWI4-SDA/UART5-RX/SPI2-MISO/UART6-CTS/CSI1-XVS-FSYNC/PE-EINT14
PE15/MCSI2-MCLK/PWM-2/NCSI-D15/PE-EINT15
VCC-PE

Design for power test, Option for cost down

VCC-PE-SOC
VCC-PE RP159 0.01R 1% R0603 60mA

Pin	Signal	Net	Pin	Signal	Net
[20]	SDC0-D1				C13
[20]	SDC0-D0				B13
[20]	SDC0-CLK				RC1 33R R0402 B12
[20]	SDC0-CMD				A12
[20]	SDC0-D3				C11
[20]	SDC0-D2				B11
[20]	SDC0-DET				C12

PF0/SDC0-D1/JTAG-MS/TRACE-DATA2/I2S3-DIN0/I2S3-DOUT1/PF-EINT0
PF1/SDC0-D0/JTAG-DI/TRACE-DATA1/I2S3-DOUT0/I2S3-DIN1/PF-EINT1
PF2/SDC0-CLK/UART0-TX/I2S3-DIN2/I2S3-DOUT2/PF-EINT2
PF3/SDC0-CMD/JTAG-DO/TRACE-DATA0/I2S3-LRCK/PF-EINT3
PF4/SDC0-D3/UART0-RX/I2S3-DIN3/I2S3-DOUT3/PF-EINT4
PF5/SDC0-D2/JTAG-CK/TRACE-CLK/I2S3-BCLK/PF-EINT5
PF6/I2S3-MCLK/PF-EINT6

close to soc

Pin	Signal	Net	Pin	Signal	Net
					R1 RW1 33R R0402
					R2
					P3 PG2 R312 0R R0402
					P2 PG3 R313 0R R0402
					T3 PG4 R314 0R R0402
					T2
					R5
					U3
					R4
					U4
					U1
					U2
					V2
					V3
					U5
					N6 70mA

PG0/SDC1-CLK/PG-EINT0
PG1/SDC1-CMD/PG-EINT1
PG2/SDC1-D0/PCIE0-PERSTN/PG-EINT2
PG3/SDC1-D1/PCIE0-WAKEN/PG-EINT3
PG4/SDC1-D2/PCIE0-CLKREQN/PG-EINT4
PG5/SDC1-D3/PG-EINT5
PG6/UART1-TX/PG-EINT6
PG7/UART1-RX/PG-EINT7
PG8/UART1-RTS/PG-EINT8
PG9/UART1-CTS/PG-EINT9
PG10/I2S1-MCLK/PG-EINT10
PG11/I2S1-BCLK/PG-EINT11
PG12/I2S1-LRCK/PG-EINT12
PG13/I2S1-DOUT0/I2S1-DIN1/PG-EINT13
PG14/I2S1-DIN0/I2S1-DOUT1/PG-EINT14
VCC-PG

Net	Pin	Signal	Net
WL-SDIO-CLK [21]			
WL-SDIO-CMD [21]			
WL-SDIO-D0 [21]	PG2	PG2	PG2 [22]
WL-SDIO-D1 [21]	PG3	PG3	PG3 [22]
WL-SDIO-D2 [21]	PG4	PG4	PG4 [22]
WL-SDIO-D3 [21]			
BT-UART-RX [21,22]			
BT-UART-TX [21,22]			
BT-UART-CTS [21,22]			
BT-UART-RTS [21,22]			
PG10 [25]			
BT-PCM-CLK [21,22]			
BT-PCM-SYNC [21,22]			
BT-PCM-DIN [21,22]			
BT-PCM-DOUT [21,22]			
VCC-PG			

Serial port data signal needs to be reversed.

Pin	Signal	Net	Pin	Signal	Net
					F10 PH0 RL88 0R R0402
					E10 PH1 RL89 0R R0402
					D10 PH2 R310 0R R0402
					B10 PH3 R311 0R R0402
					A10 PH4 R319 0R R0402
					B9 PH5 R322 0R R0402
					C9 PH6 R301 0R R0402
					F8 PH7 R300 0R R0402
					E8 PH8 R326 0R R0402
					D8 PH9 RL90 0R R0402
					B8 PH10 RL91 0R R0402
					A8 PH11 R362 0R R0402
					C7 PH12 R363 0R R0402
					B7 PH13 R2 0R R0402
					A6 PH14 R1 0R R0402
					B6 PH15 R3 0R R0402
					A5 PH16 R304 0R R0402
					B5 PH17 R305 0R R0402
					D6 PH18 R306 0R R0402
					E6 PH19 R307 0R R0402
					J12 130mA

PH0/TWI0-SCK/RGMII0-RXD1/RMII0-RXD1/PH-EINT0
PH1/TWI0-SDA/RGMII0-RXD0/RMII0-RXD0/PH-EINT1
PH2/TWI1-SCK/CPU-CUR-W/I2S2-DIN3/RGMII0-RXCTL/RMII0-CRS-DV/I2S2-DOUT3/PH-EINT2
PH3/TWI1-SDA/IR-TX/I2S2-DIN2/RGMII0-CLKIN/RMII0-RXER/I2S2-DOUT2/PH-EINT3
PH4/UART3-TX/SPI1-CS0/CPU-CUR-W/RGMII0-TXD1/RMII0-TXD1/PH-EINT4
PH5/UART3-RX/SPI1-CLK/LEDC/RGMII0-TXD0/RMII0-TXD0/PH-EINT5
PH6/UART3-RTS/SPI1-MOSI/OWA-IN/RGMII0-TXCK/RMII0-TXCK/PH-EINT6
PH7/UART3-CTS/SPI1-MISO/OWA-OUT/RGMII0-TXCTL/RMII0-TXEN/PH-EINT7
PH8/DMIC-CLK/SPI2-CS0/I2S2-MCLK/I2S2-DIN2/PH-EINT8
PH9/DMIC-DATA0/SPI2-CLK/I2S2-BCLK/RGMII0-MDC/PH-EINT9
PH10/DMIC-DATA1/SPI2-MOSI/I2S2-LRCK/RGMII0-MDIO/PH-EINT10
PH11/DMIC-DATA2/SPI2-MISO/I2S2-DOUT0/I2S2-DIN1/PCIE0-PERSTN/PH-EINT11
PH12/DMIC-DATA3/TWI3-SCK/I2S2-DIN0/I2S2-DOUT1/PCIE0-WAKEN/PH-EINT12
PH13/TWI3-SDA/I2S3-MCLK/RGMII0-EPHY-25M/PH-EINT13
PH14/I2S3-BCLK/RGMII0-RXD3/RMII0-NULL/PH-EINT14
PH15/I2S3-LRCK/RGMII0-RXD2/RMII0-NULL/PH-EINT15
PH16/I2S3-DOUT0/I2S3-DIN1/RGMII0-RXCK/RMII0-NULL/CLK-FANOUT0/PH-EINT16
PH17/I2S3-DOUT1/I2S3-DIN0/RGMII0-TXD3/RMII0-NULL/PH-EINT17
PH18/IR-TX/I2S3-DOUT2/I2S3-DIN2/RGMII0-TXD2/RMII0-NULL/PH-EINT18
PH19/IR-RX/I2S3-DOUT3/I2S3-DIN3/LEDC/PCIE0-CLKREQN/PH-EINT19
VCC-IO

Net	Pin	Signal	Net
TWI0-SCK [14,16]			
TWI0-SDA [14,16]			
TWI1-SCK [26]			
TWI1-SDA [26]			
PS-EINT [26]			
ETA6973-nCE [8]			
PA-SHDN [18,25]			
OWA-OUT [18]			
ETA6973-nPG [8]			
CTP-INT [14,16]			
CTP-RST [14,16]			
USB2-SW [24]			
ACIN-DET [8]			
ETA6973-nINT [8]			
USB0-ID [8,20]			
USB2-SW-EN [24]			
LCD-BL-EN [14]			
DDR-PARA-SEL-GPIO [12]			
IR-TX [25]			
IR-RX [25]			
VCC-IO			

Net	Pin	Signal	Net
			A4
			B4
			A3
			B3
			B2
			B1
			C5
			C4
			E5
			E4
			G5
			G4
			C2
			C1
			D2
			D1
			E2
			E1
			F1
			F2
			G2
			G1
			H2
			H1
			J7 90mA
			H10 25mA

PK0/MCSIA-D0N/PK-EINT0
PK1/MCSIA-D0P/PK-EINT1
PK2/MCSIA-D1N/PK-EINT2
PK3/MCSIA-D1P/PK-EINT3
PK4/MCSIA-CKN/TWI2-SCK/PK-EINT4
PK5/MCSIA-CKP/TWI2-SDA/PK-EINT5
PK6/MCSIB-D0N/PK-EINT6
PK7/MCSIB-D0P/PK-EINT7
PK8/MCSIB-D1N/PK-EINT8
PK9/MCSIB-D1P/PK-EINT9
PK10/MCSIB-CKN/TWI3-SCK/PK-EINT10
PK11/MCSIB-CKP/TWI3-SDA/PK-EINT11
PK12/MCSIC-D0N/UART7-TX/TWI4-SCK/NCSI-PCLK/PK-EINT12
PK13/MCSIC-D0P/UART7-RX/TWI4-SDA/NCSI-MCLK/PK-EINT13
PK14/MCSIC-D1N/UART7-RTS/UART5-RTS/NCSI-HSYNC/PK-EINT14
PK15/MCSIC-D1P/UART7-CTS/UART5-CTS/NCSI-VSYNC/PK-EINT15
PK16/MCSIC-CKN/TWI5-SCK/UART5-TX/NCSI-D0/PK-EINT16
PK17/MCSIC-CKP/TWI5-SDA/UART5-RX/NCSI-D1/PK-EINT17
PK18/MCSID-D0N/MCSI0-MCLK/UART6-TX/NCSI-D2/PK-EINT18
PK19/MCSID-D0P/TWI2-SCK/UART6-RX/NCSI-D3/PK-EINT19
PK20/MCSID-D1N/TWI2-SDA/UART6-RTS/NCSI-D4/PK-EINT20
PK21/MCSID-D1P/MCSI1-MCLK/UART6-CTS/NCSI-D5/PK-EINT21
PK22/MCSID-CKN/TWI3-SCK/PWM-6/NCSI-D6/PK-EINT22
PK23/MCSID-CKP/TWI3-SDA/PWM-7/NCSI-D7/PK-EINT23
VCC-PK
VCC-MCSI

Net	Pin	Signal	Net
MCSIA-D0N [17]			
MCSIA-D0P [17]			
MCSIA-D1N [17]			
MCSIA-D1P [17]			
MCSIA-CKN [17]			
MCSIA-CKP [17]			
MCSIB-D0N [17]			
MCSIB-D0P [17]			
MCSIB-D1N [17]			
MCSIB-D1P [17]			
PK10 [25]			
PK11 [25]			
MCSIC-D0N [17]			
MCSIC-D0P [17]			
MCSIC-D1N [17]			
MCSIC-D1P [17]			
MCSIC-CKN [17]			
MCSIC-CKP [17]			
MCSID-D0N [17]			
MCSID-D0P [17]			
MCSID-D1N [17]			
MCSID-D1P [17]			
MCSID-CKN [17]			
MCSID-CKP [17]			
VCC-PK			
VCC-MCSI			

Pin	Signal	Net	Pin	Signal	Net
					AJ7
					AH7
					AJ8 CPUS-TX
					AH8 CPUS-RX
					AH9 PL4 R336 0R R0402
					AJ9 PL5 R337 0R R0402
					AE9 PL6 R338 0R R0402
					AF9 PL7 R339 0R R0402
					AG10 PL8 R340 0R R0402
					AG9 PL9 R341 0R R0402
					AC9 PL10 R342 0R R0402
					AD9 PL11 R343 0R R0402
					AF7 PL12 R344 0R R0402
					AE7 PL13 R345 0R R0402
					AA9 50mA

PL0/S-TWI0-SCK/S-PL-EINT0
PL1/S-TWI0-SDA/S-PL-EINT1
PL2/S-UART0-TX/S-UART1-TX/S-PWM-2/S-PL-EINT2
PL3/S-UART0-RX/S-UART1-RX/S-PWM-3/S-PL-EINT3
PL4/S-JTAG-MS/S-CAN-TX0/S-PWM-4/I2S0-BCLK/S-PL-EINT4
PL5/S-JTAG-CK/S-CAN-RX0/S-PWM-5/I2S0-LRCK/DMIC-DATA3/S-PL-EINT5
PL6/S-JTAG-DO/S-PWM-6/I2S0-DIN1/I2S0-DOUT0/DMIC-DATA2/S-PL-EINT6
PL7/S-JTAG-DI/S-PWM-7/I2S0-DOUT1/I2S0-DIN0/DMIC-DATA1/S-PL-EINT7
PL8/S-TWI1-SCK/S-DJTAG-MS/S-RJTAG-MS/I2S0-MCLK/DMIC-DATA0/S-PL-EINT8
PL9/S-TWI1-SDA/S-DJTAG-CK/S-RJTAG-CK/S-PWM-1/DMIC-CLK/S-PL-EINT9
PL10/S-PWM-0/S-DJTAG-DO/S-RJTAG-DO/DMIC-DATA0/S-SPI0-CS0/S-PL-EINT10
PL11/S-IR-RX/S-DJTAG-DI/S-RJTAG-DI/DMIC-DATA1/S-SPI0-CLK/S-PL-EINT11
PL12/S-TWI2-SCK/S-PWM-8/S-UART0-TX/DMIC-DATA2/S-SPI0-MOSI/S-PL-EINT12
PL13/S-TWI2-SDA/S-PWM-9/S-UART0-RX/DMIC-DATA3/S-SPI0-MISO/S-PL-EINT13
VCC-PL

Net	Pin	Signal	Net
PMU-SCK [7,8]			
PMU-SDA [7,8]			
CPUS-TX [25]			
CPUS-RX [25]			
GS-INT [26]	PL4	PL4	PL4 [25]
GYRO-INT1 [26]	PL5	PL5	PL5 [25]
GYRO-INT2 [26]	PL6	PL6	PL6 [25]
EINT-HAL [26]	PL7	PL7	PL7 [25]
LED-EN [17]	PL8	PL8	PL8 [25]
USB1-DRVVBUS [20]	PL9	PL9	PL9 [25]
USB-VBUSDET [8]	PL10	PL10	PL10 [25]
VCC-WIFI-PWREN [7]	PL11	PL11	PL11 [25]
USB0-DRVVBUS [8]	PL12	PL12	PL12 [25]
CC-INT [24]	PL13	PL13	PL13 [25]

Design for power test, Option for cost down

VCC-PL-SOC
RP160 0.01R 1% R0603 VCC-PL

Net	Pin	Signal	Net
			AJ4
			AJ3
			AH5
			AH4
			AJ5
			AH6
			AC7 25mA

PM0/S-UART0-TX/S-UART1-TX/S-PWM-2/S-PM-EINT0
PM1/S-UART0-RX/S-UART1-RX/S-PWM-3/S-PM-EINT1
PM2/S-TWI1-SCK/S-RJTAG-MS/S-PWM-6/S-PM-EINT2
PM3/S-TWI1-SDA/S-RJTAG-CK/S-PWM-7/S-PM-EINT3
PM4/S-PWM-8/S-RJTAG-DO/S-TWI2-SCK/S-PM-EINT4
PM5/S-IR-RX/S-RJTAG-DI/S-TWI2-SDA/S-PWM-9/S-PM-EINT5
VCC-PM

Net
WL-WAKE-AP [21,22]
WL-REG-ON [21,22]
BT-RESETN [21,22]
AP-WAKE-BT [21,22]
BT-WAKE-AP [21,22]
S-PWM-9 [25]
VCC-PM

A523

VCC-PC-SOC VCC-PD: C48 100nF C0402; C49 10uF C0603; C50 100nF C0402
VCC-LVDS0 VCC-PE-SOC: C51 100nF C0402; C52 100nF C0402
VCC-PG VCC-IO: C54 100nF C0402; C55 1uF C0402; C56 100nF C0402
VCC-PK VCC-MCSI: C57 100nF C0402; C58 100nF C0402
VCC-PL-SOC VCC-PM: C59 100nF C0402; C60 100nF C0402
GND

GPIO use gide:
1.Note that the voltage of SOC GPIO must matches the external IO voltage.
2.The pull up voltage of the GPIO is selected to correspond to the power field voltage of GPIO.
3.Power current is PCB layout reference minimum.

AllWinner Technology Co.,Ltd	
Design Name	A523-EVB-AXP717C-LPDDR4-4X
Size A3	Page Name 11 A523 GPIO
Rev	
Date: Tuesday, November 15, 2022	Sheet 11 of 27

Audio&ADC

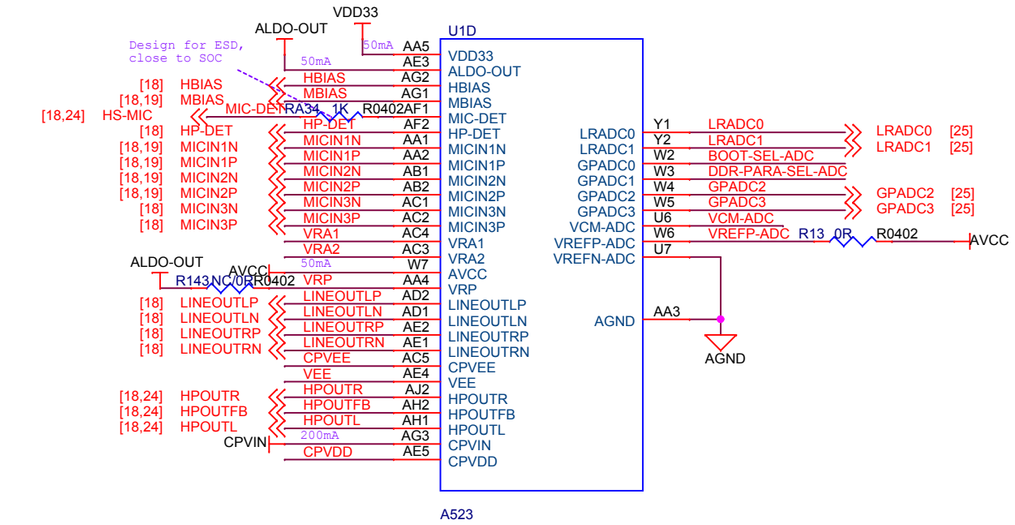

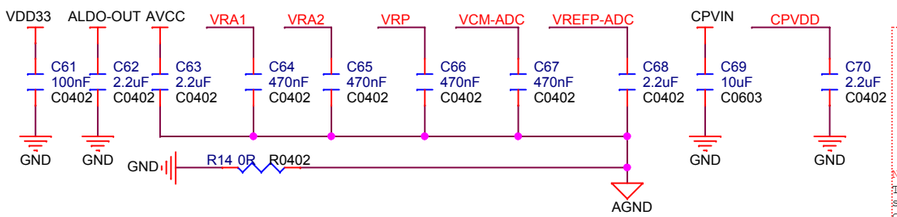

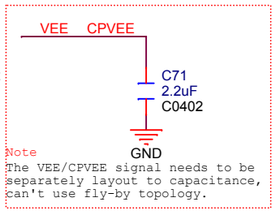

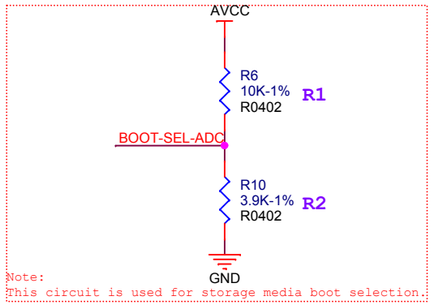

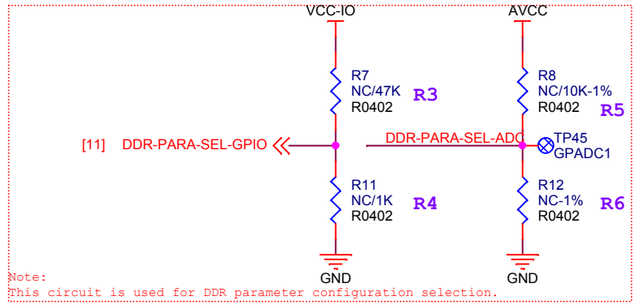

NO.	R1	R2	Boot Select type
1	NC	10K	SMHC0->MLC NAND->SLC NAND->try
2	10K	1K	SMHC0->SLC NAND->MLC NAND->try
3	10K	2K2	SMHC0->EMMC_USER->EMMC_BOOT->try
4	10K	3K9	SMHC0->EMMC_BOOT->EMMC_USER->try
5	6K8	4K7	SMHC0->SPI NOR->try
6	6K8	6K8	SMHC0->SPI NAND->try

try default order:(selected fail media will not try)
EMMC_USER->EMMC_BOOT->SLC NAND->MLC NAND->SPI NOR->SPI NAND

GPIO Level(Set by the R3 pull-up and R4 pull-down resistance of PH17 GPIO)	GPADC Voltage(Fixed pull-up R5 is 10K-1%,Set the voltage by adjusting pull-down resistor R6)	DDR PARA
0	163mV(1K-1%)	DDR PARA 1
0	382mV(2.7K-1%)	DDR PARA 2
0	608mV(5.1K-1%)	DDR PARA 3
0	811mV(8.2K-1%)	DDR PARA 4
0	1050mV(14K-1%)	DDR PARA 5
0	1315mV(27K-1%)	DDR PARA 6
0	1569mV(68K-1%)	DDR PARA 7
0	1800mV(NC)	DDR PARA 8
1	163mV(1K-1%)	DDR PARA 9
1	382mV(2.7K-1%)	DDR PARA 10
1	608mV(5.1K-1%)	DDR PARA 11
1	811mV(8.2K-1%)	DDR PARA 12
1	1050mV(14K-1%)	DDR PARA 13
1	1315mV(27K-1%)	DDR PARA 14
1	1569mV(68K-1%)	DDR PARA 15
1	1800mV(NC)	DDR PARA 16

USB&EDP&PCIE

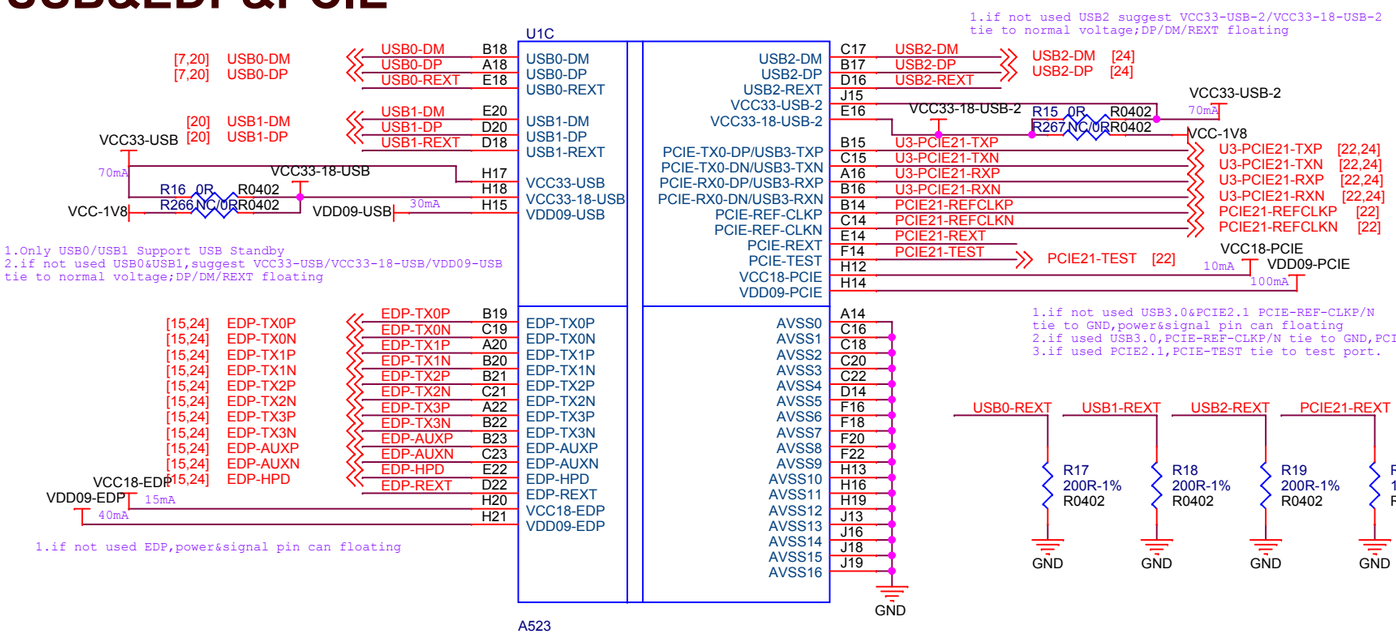

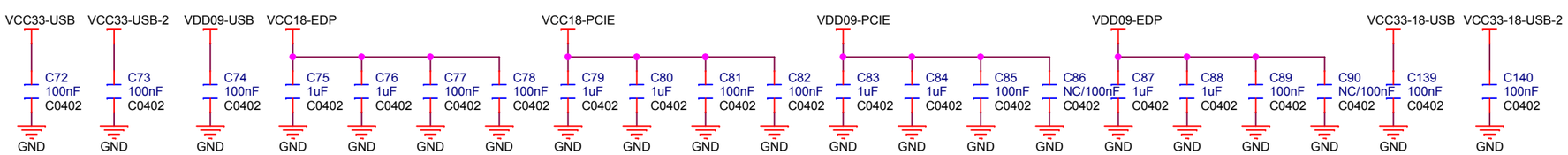

AllWinner Technology Co.,Ltd	
Design Name	A523-EVB-AXP717C-LPDDR4-4X
Size A3	Page Name 12 A523 Analog&High-speed
Rev	
Date: Tuesday, November 15, 2022	Sheet 12 of 27

EMMC Default:use EMMC

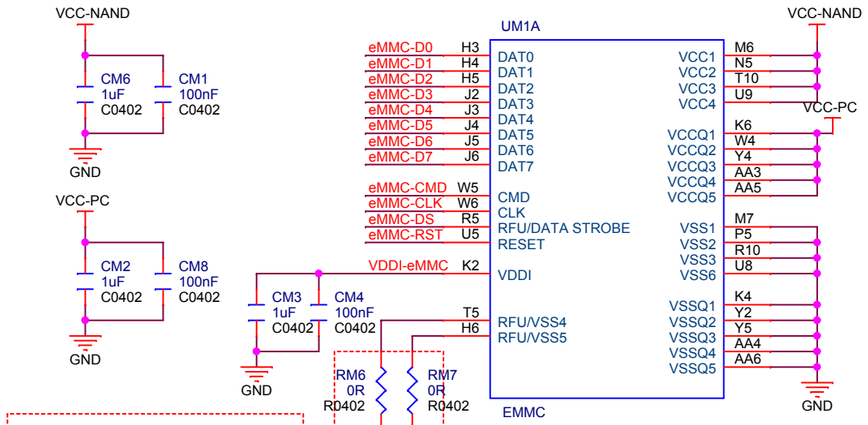

Note
If eMMC is v5.0/v5.1,mount this two resistors.

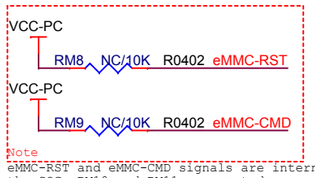

Note
eMMC-RST and eMMC-CMD signals are internally pulled up in the SOC, RM10 and RM11 can cost down.

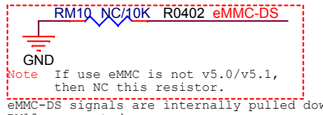

Note If use eMMC is not v5.0/v5.1, then NC this resistor.
eMMC-DS signals are internally pulled down in the SOC, RM10 can cost down.

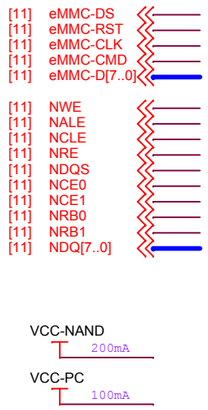

NAND Option

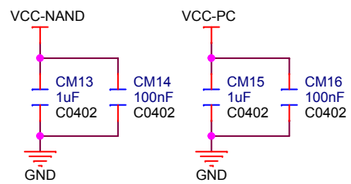

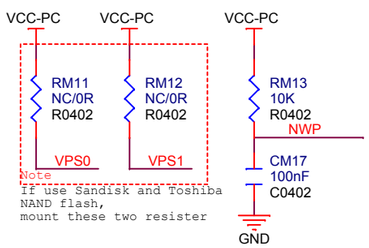

Note
If use Sandisk and Toshiba NAND flash, mount these two resister

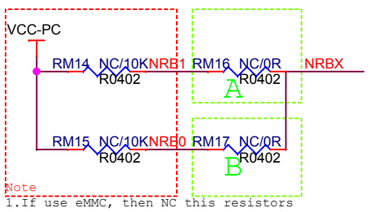

Note
1.If use eMMC, then NC this resistors
2.NRB1 and NRB0 signals are internally pulled up in the SOC, RM14 and RM15 can cost down.

(1) 1NAND [1 CE or 2 CE]:A=0R,B=NC
(2) 1NAND [4 CE]:A=NC,B=0R
(3) 2NAND [1 CE] or 2NAND [2 CE]:A=NC,B=0R
(4) VPS refer to the available table

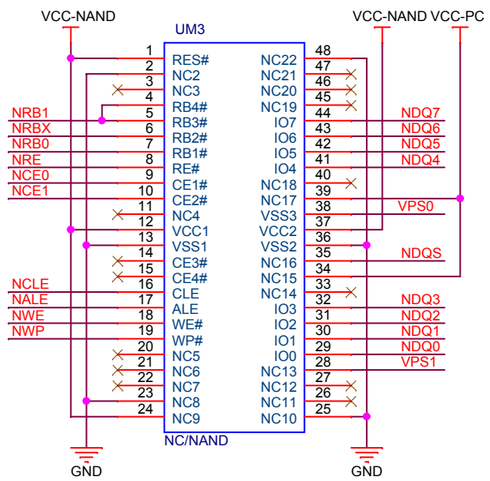

BGA NAND Option

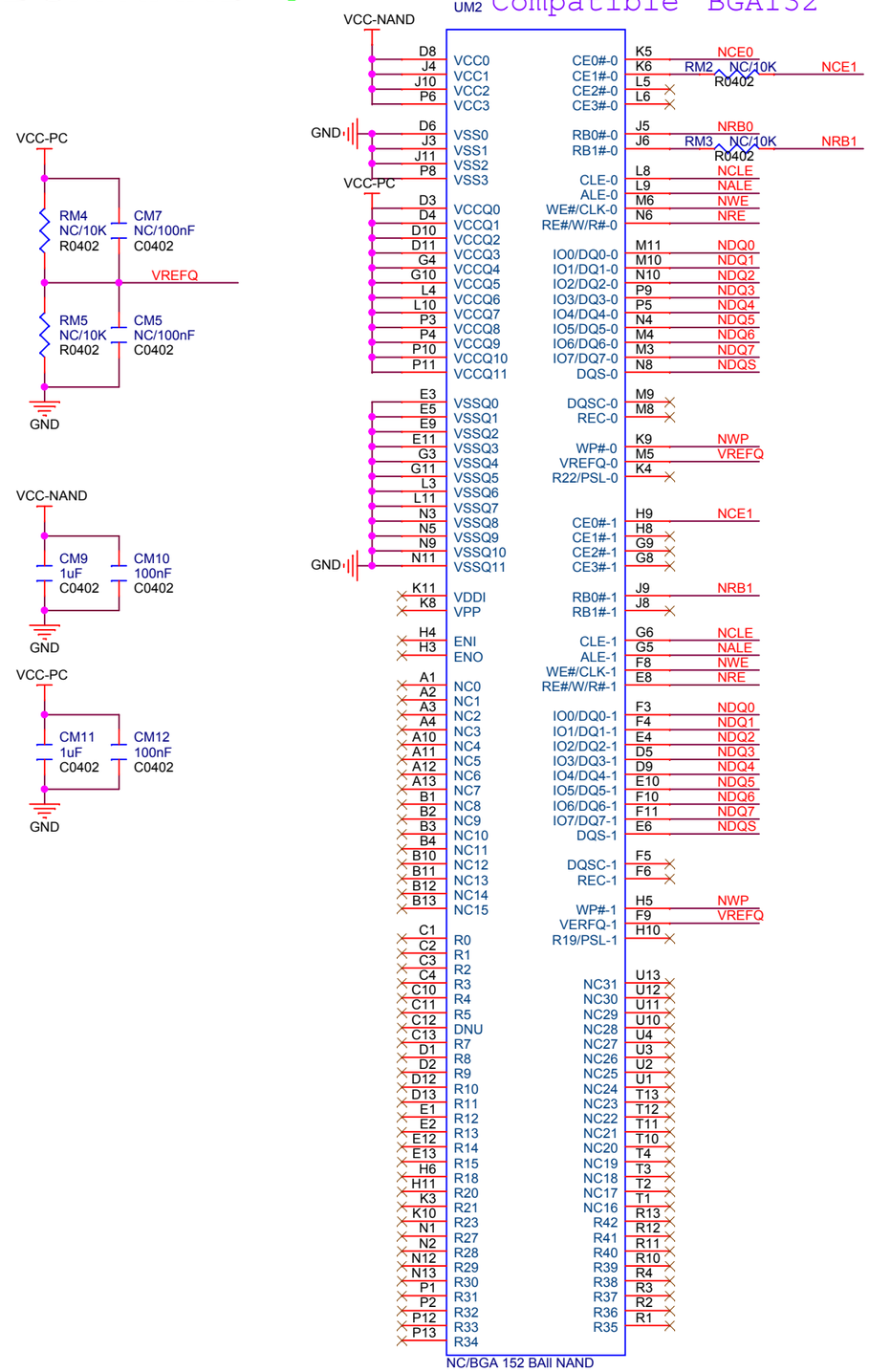

AllWinner Technology Co.,Ltd		
Design Name: A523-EVB-AXP717C-LPDDR4-4X		
Size: A3	Page Name: 13 EMMC/NAND	Rev
Date: Tuesday, November 15, 2022	Sheet 13 of 27	

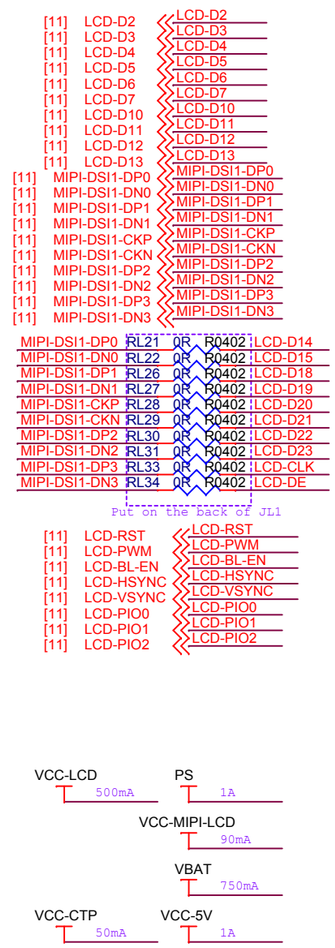

MIPI-DSI1

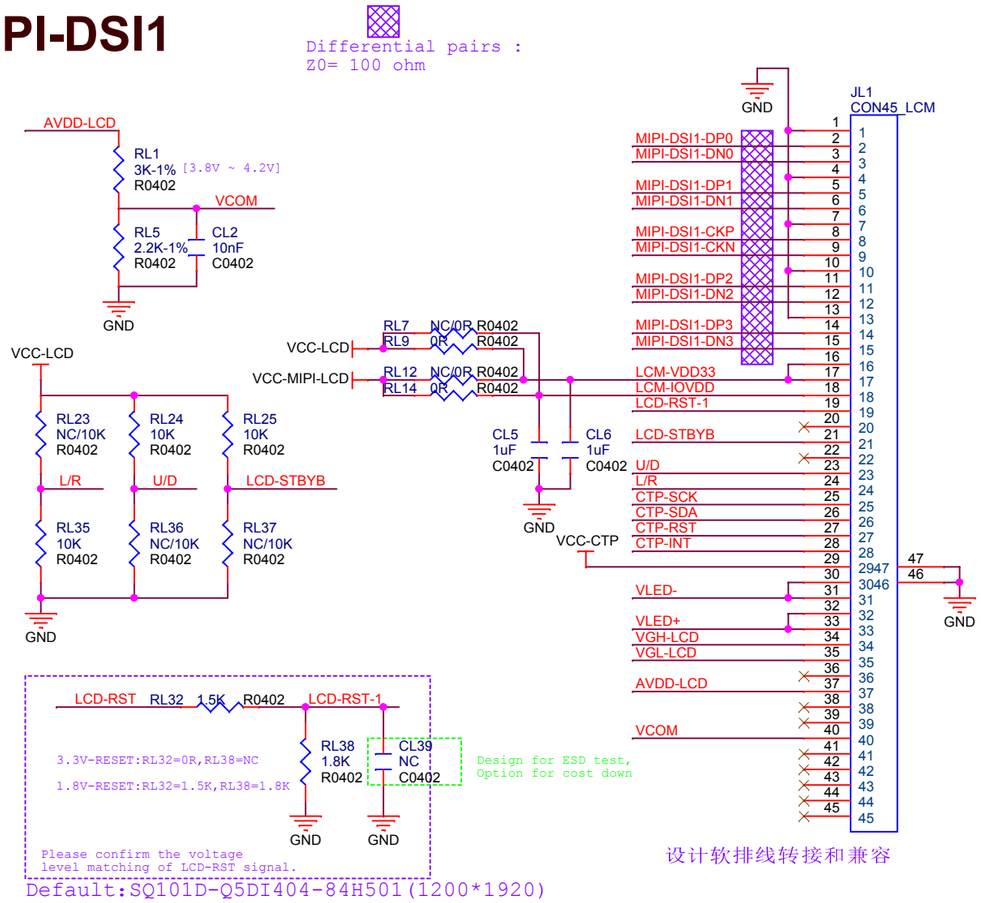

Default:SQ101D-Q5DI404-84H501(1200*1920)

RGB LCD

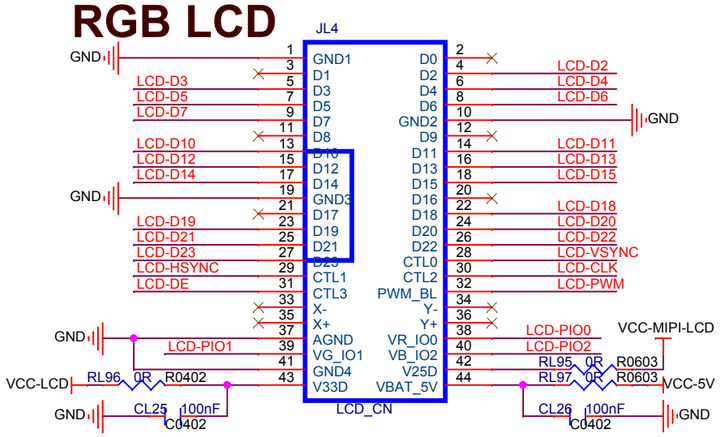

BACKLIGHT

Default
SQ101D-Q5DI404-84H501(1200*1920)

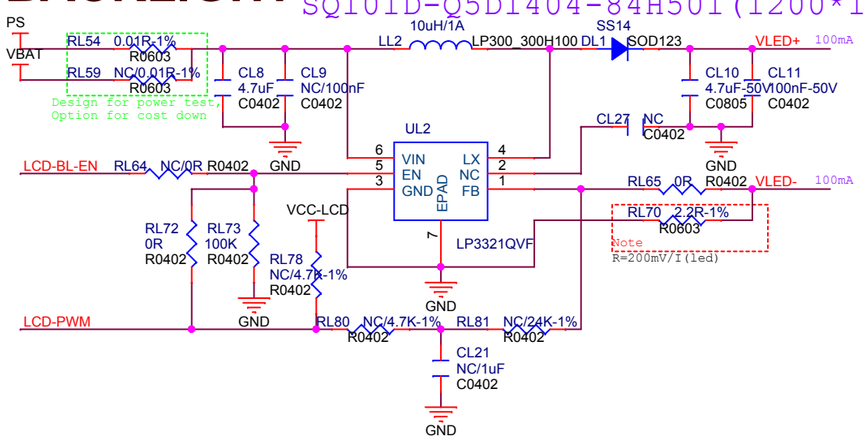

LCD POWER 预 留

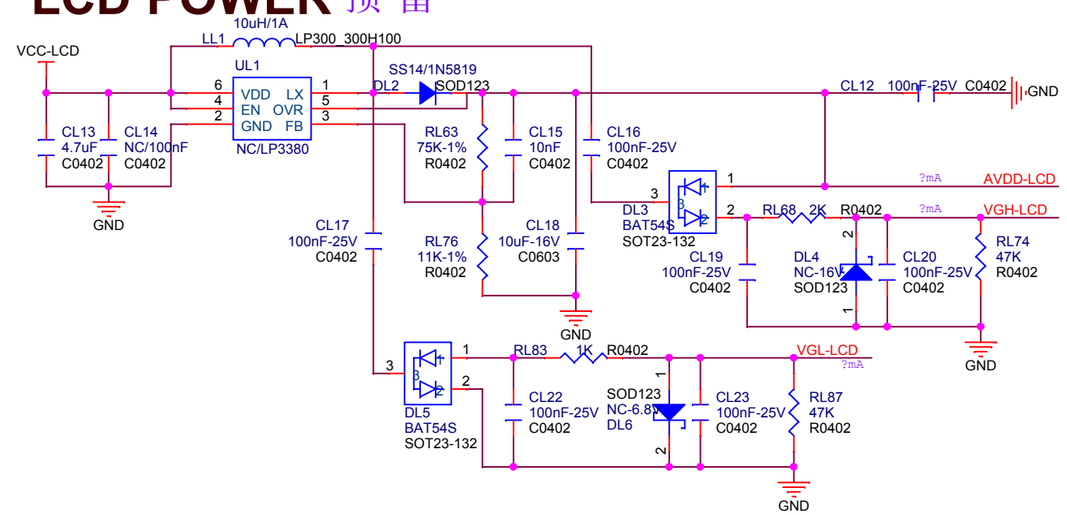

AllWinner Technology Co.,Ltd		
Design Name: A523-EVB-AXP717C-LPDDR4-4X		
Size: A3	Page Name: 14 MIPI LCM	Rev
Date: Tuesday, November 15, 2022	Sheet 14 of 27	

EDP LCM

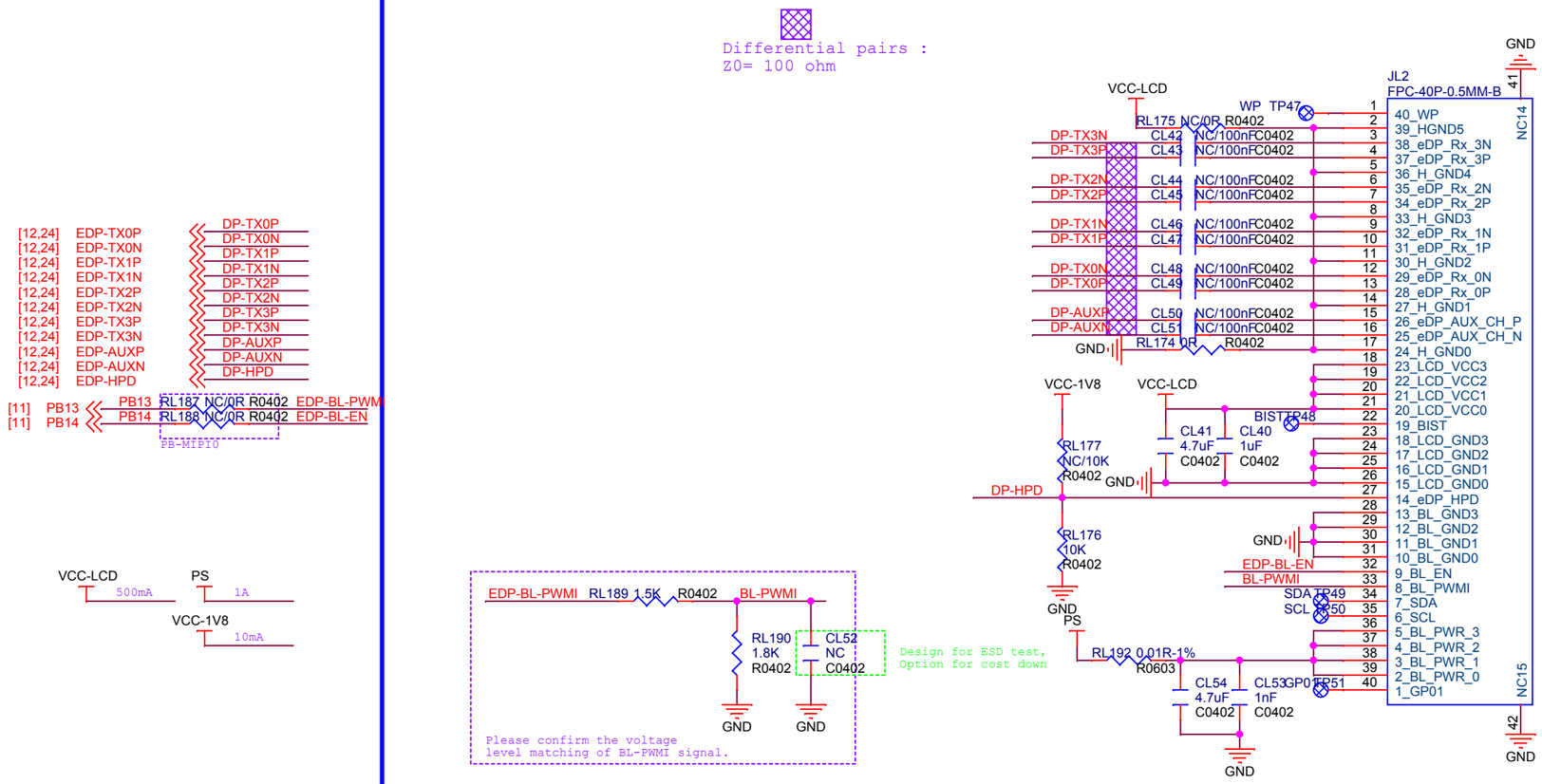

AllWinner Technology Co.,Ltd		
Design Name: A523-EVB-AXP717C-LPDDR4-4X		
Size: A3	Page Name: 15 EDP LCM	Rev
Date: Tuesday, November 15, 2022	Sheet 15 of 27	

CTP

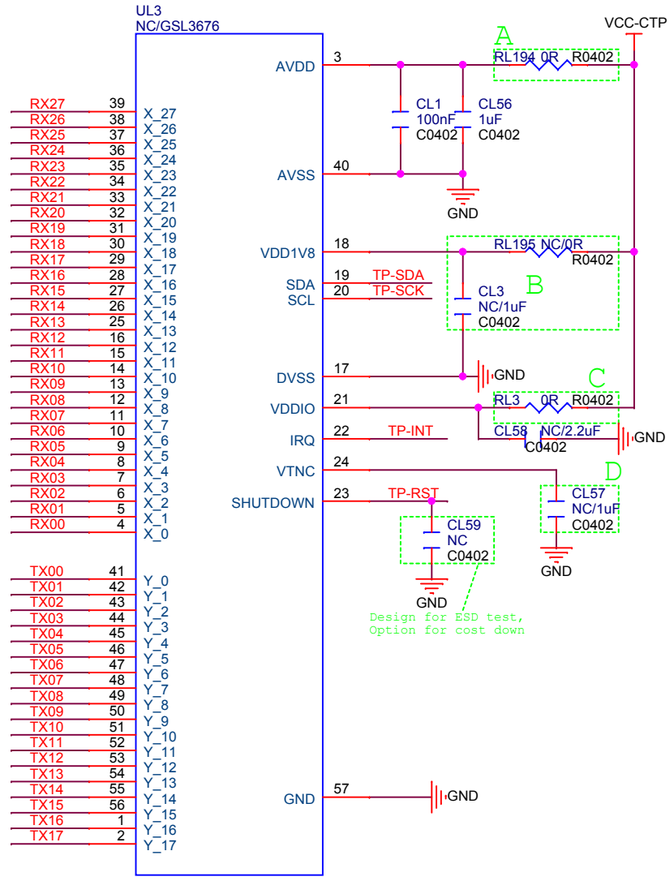

Default: GSL3676

Circuit	GSL3676	BL3676
A	0R	NC
B	NC	Mount
C	0R	NC
D	NC	1uF

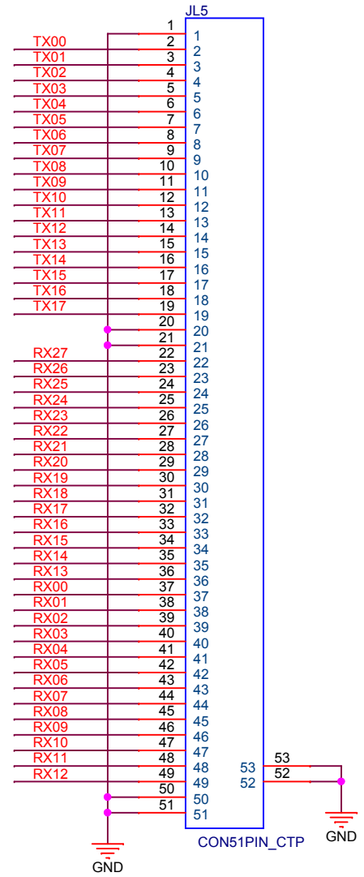

[11,14] TWI0-SCK — TP-SCK
[11,14] TWI0-SDA — TP-SDA
[11,14] CTP-INT — TP-INT
[11,14] CTP-RST — TP-RST

VCC-IO
RL193 2K R0402 TWI0-SCK
RL2 2K R0402 TWI0-SDA

VCC-IO
20mA

VCC-CTP
50mA

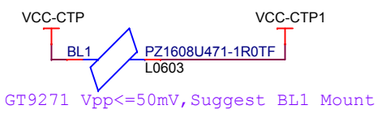

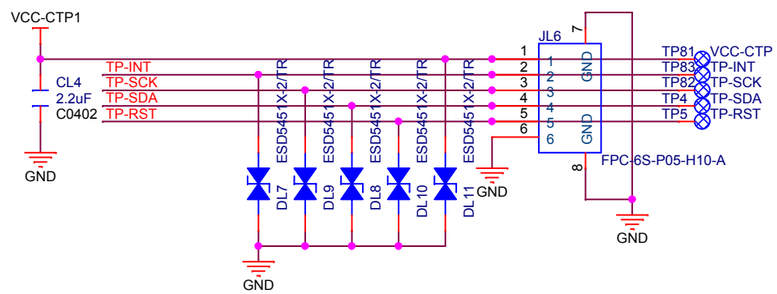

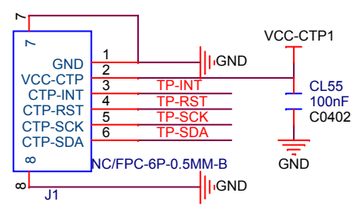

AllWinner Technology Co.,Ltd

Design Name: A523-EVB-AXP717C-LPDDR4-4X

Size: A3 | Page Name: 16 CTP | Rev

Date: Tuesday, November 15, 2022 | Sheet 16 of 27

CAMERA

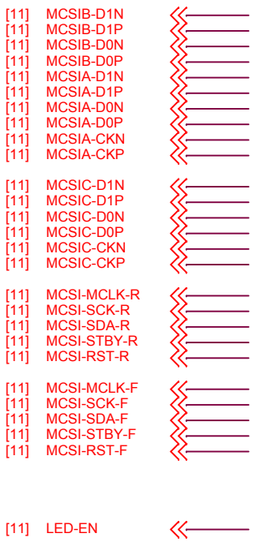

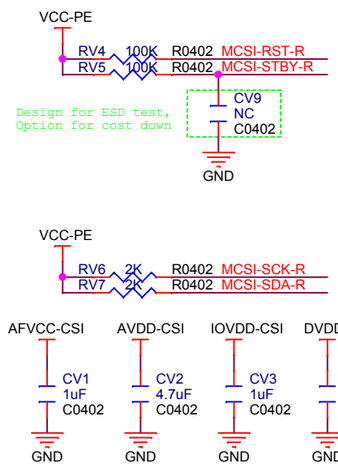

NOTE:

1.The working voltage and current of power need determine according to the peripheral specification.

2.AFVCC-CSI has timing requirements, don't share the same power with DOVDD-CSI.

3.The front and rear cameras need to consider the compatibility of DVDD-CSI voltage.

MCSIB-D1[P/N]
MCSIB-D0[P/N]
MCSIA-D1[P/N]
MCSIA-D0[P/N]
MCSIA-CK[P/N]
Differential pairs
Z0= 100 ohm

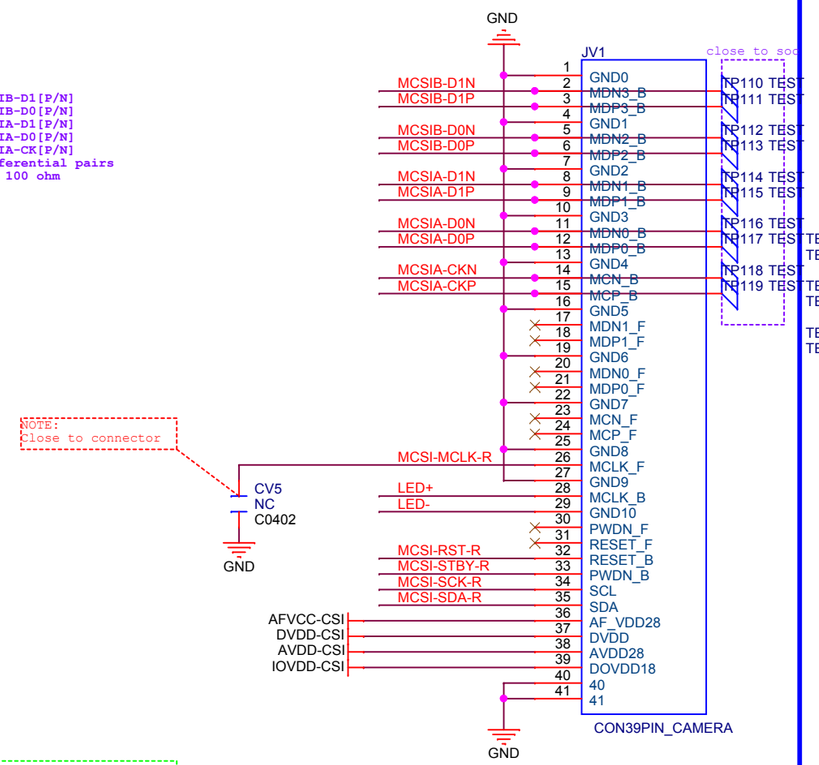

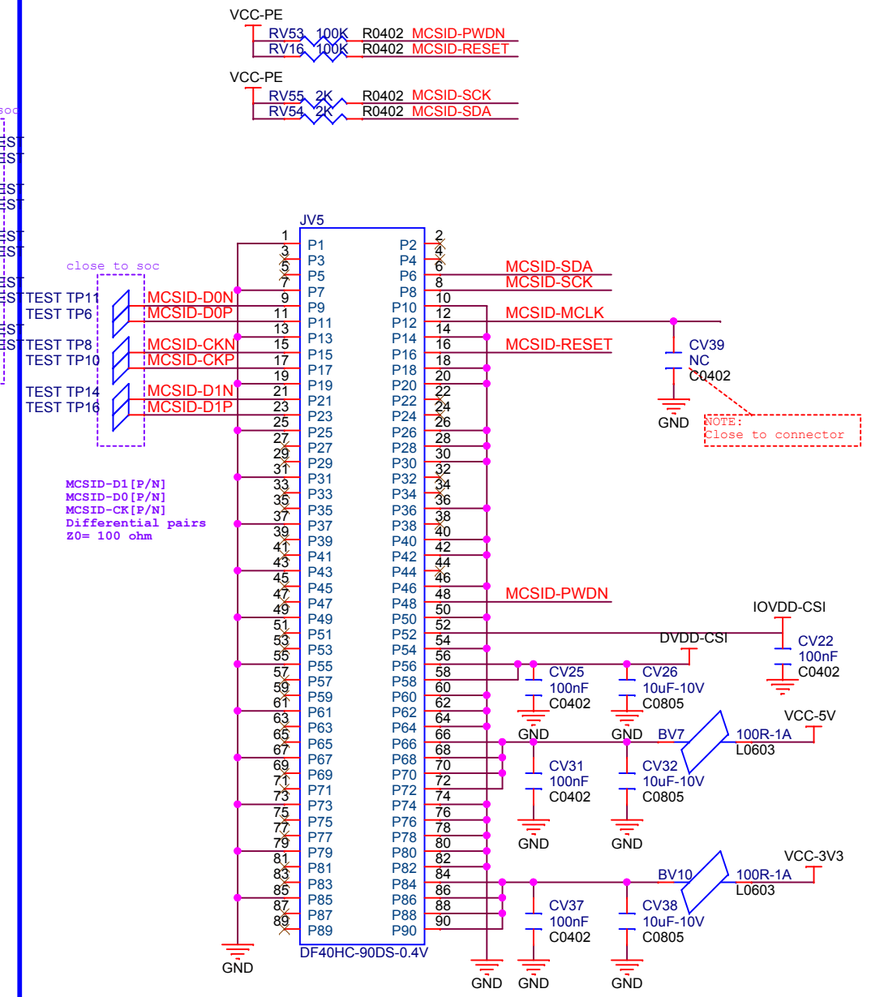

FLASH_LED

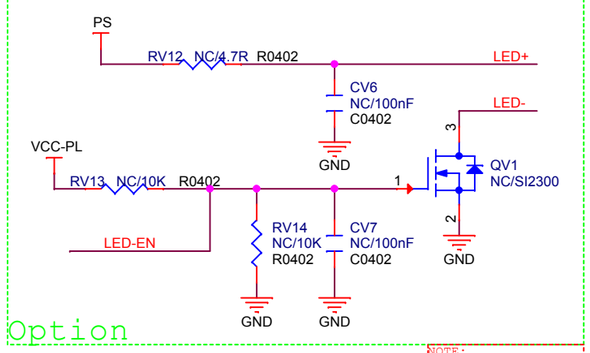

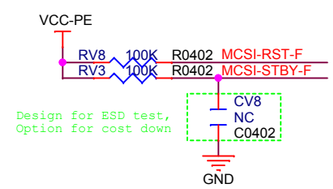

MCSIC-D1[P/N]
MCSIC-D0[P/N]
MCSIC-CK[P/N]
Differential pairs
Z0= 100 ohm

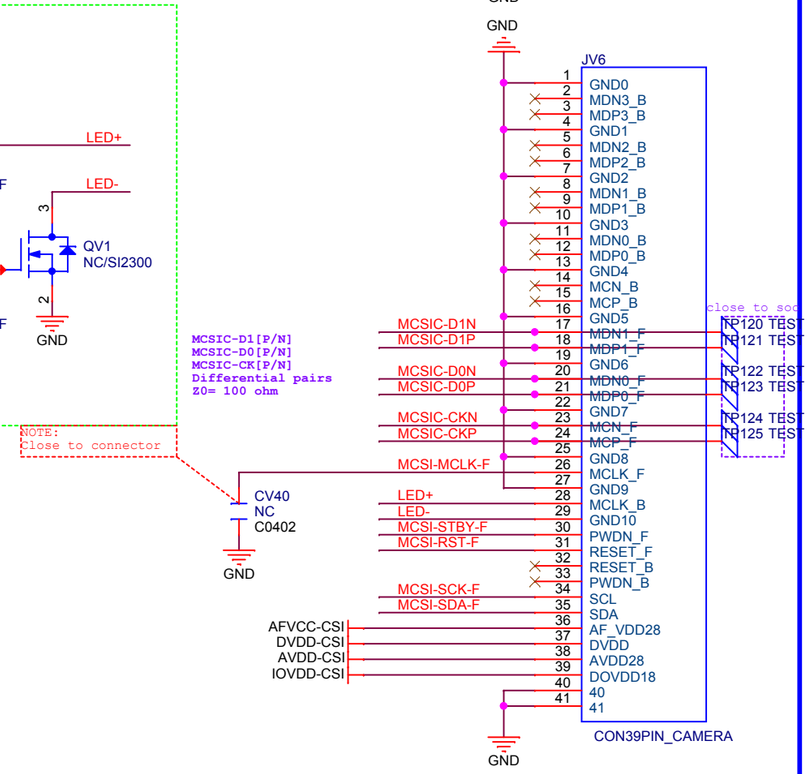

AllWinner Technology Co.,Ltd		
Design Name: A523-EVB-AXP717C-LPDDR4-4X		
Size: A3	Page Name: 17 CAMERA	Rev
Date: Tuesday, November 15, 2022	Sheet 17 of 27	

HEADPHONE

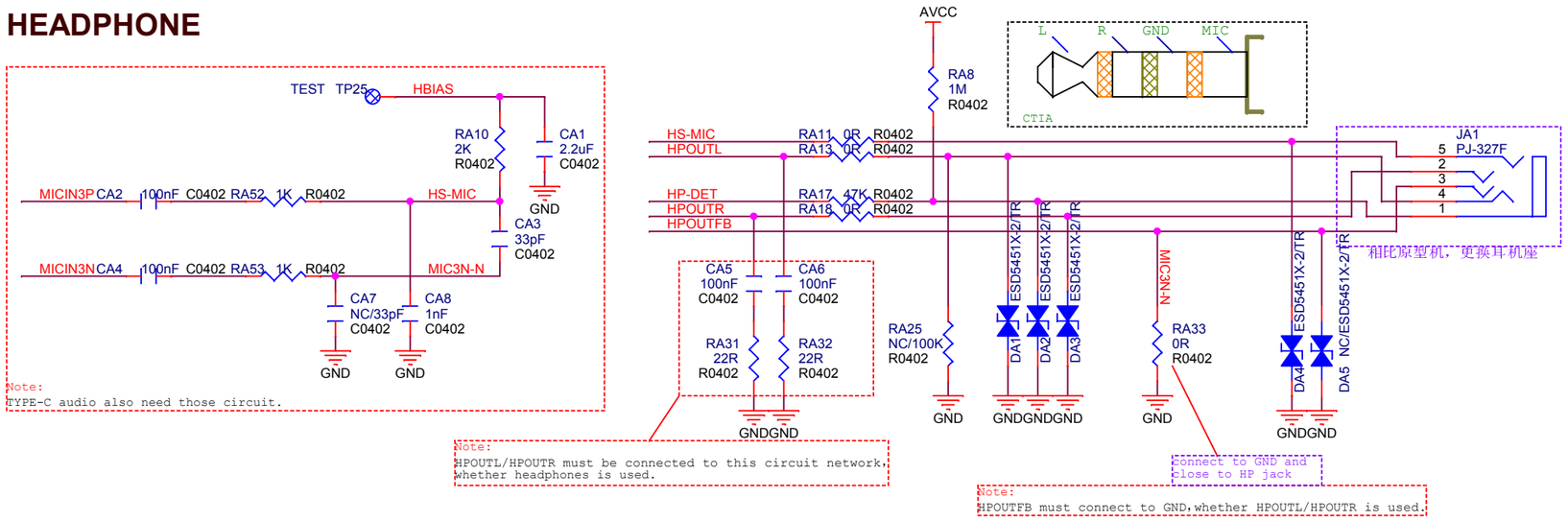

[12] MICIN3P — MICIN3P
[12] MICIN3N — MICIN3N
[12,24] HS-MIC — HS-MIC
[12] HBIAS — HBIAS
[12,24] HPOUTL — HPOUTL
[12,24] HPOUTFB — HPOUTFB
[12,24] HPOUTR — HPOUTR
[12] HP-DET — HP-DET
[12,19] MBIAS — MBIAS
[12,19] MICIN1P — MICIN1P
[12,19] MICIN1N — MICIN1N
[12,19] MICIN2P — MICIN2P
[12,19] MICIN2N — MICIN2N
[11,25] PA-SHDN — PA-SHDN
[19] SPKR+ — SPKR+
[19] SPKR- — SPKR-
[19] SPKL+ — SPKL+
[19] SPKL- — SPKL-
[12] LINEOUTLP — LINEOUTLP
[12] LINEOUTLN — LINEOUTLN
[12] LINEOUTRP — LINEOUTRP
[12] LINEOUTRN — LINEOUTRN
[11] OWA-OUT — OWA-OUT

VBAT 1A
VCC-5V 1A
AVCC 15mA

SPEAKER

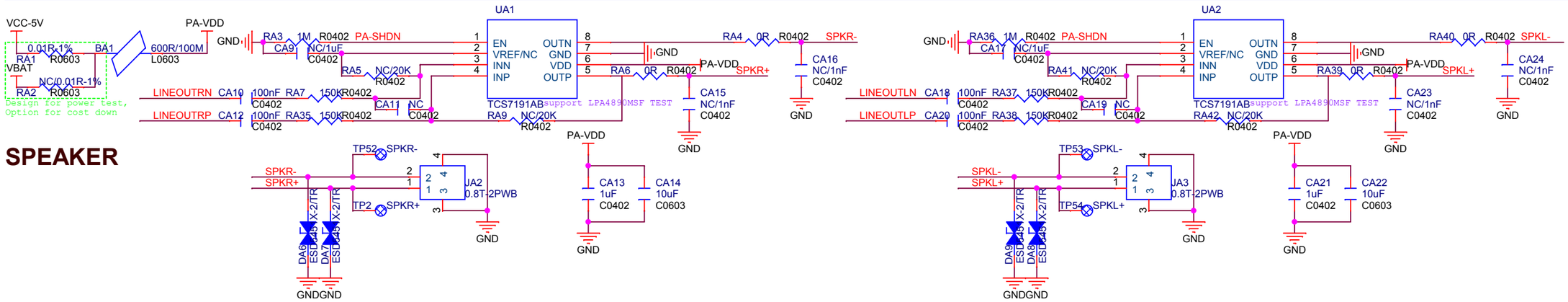

ECM MIC

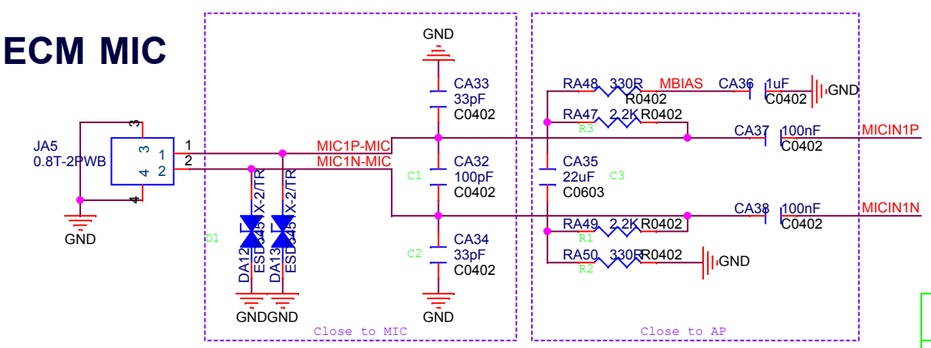

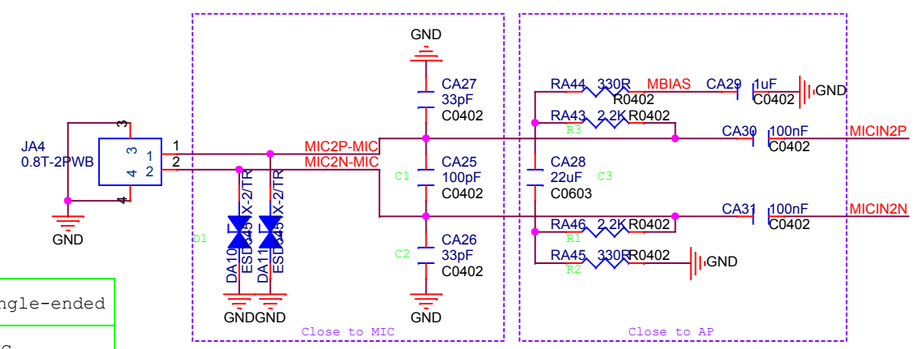

Component	Diferential	single-ended
R1 R2 C1 C3 D1	USE	NC
C2	33pF	0R
R3	2.2K	1K

OPTICAL

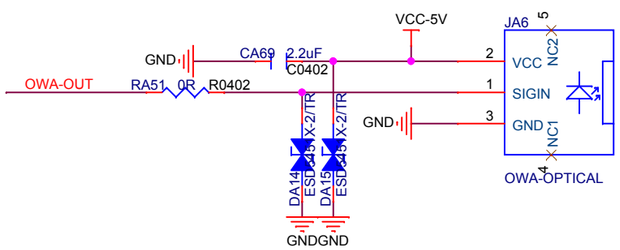

AllWinner Technology Co.,Ltd

Design Name: A523-EVB-AXP717C-LPDDR4-4X

Size: A3 | Page Name: 18 AUDIO | Rev

Date: Tuesday, November 15, 2022 | Sheet 18 of 27

Default:Use AC107

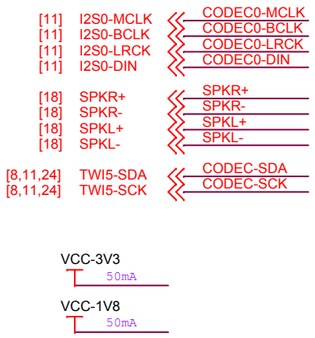

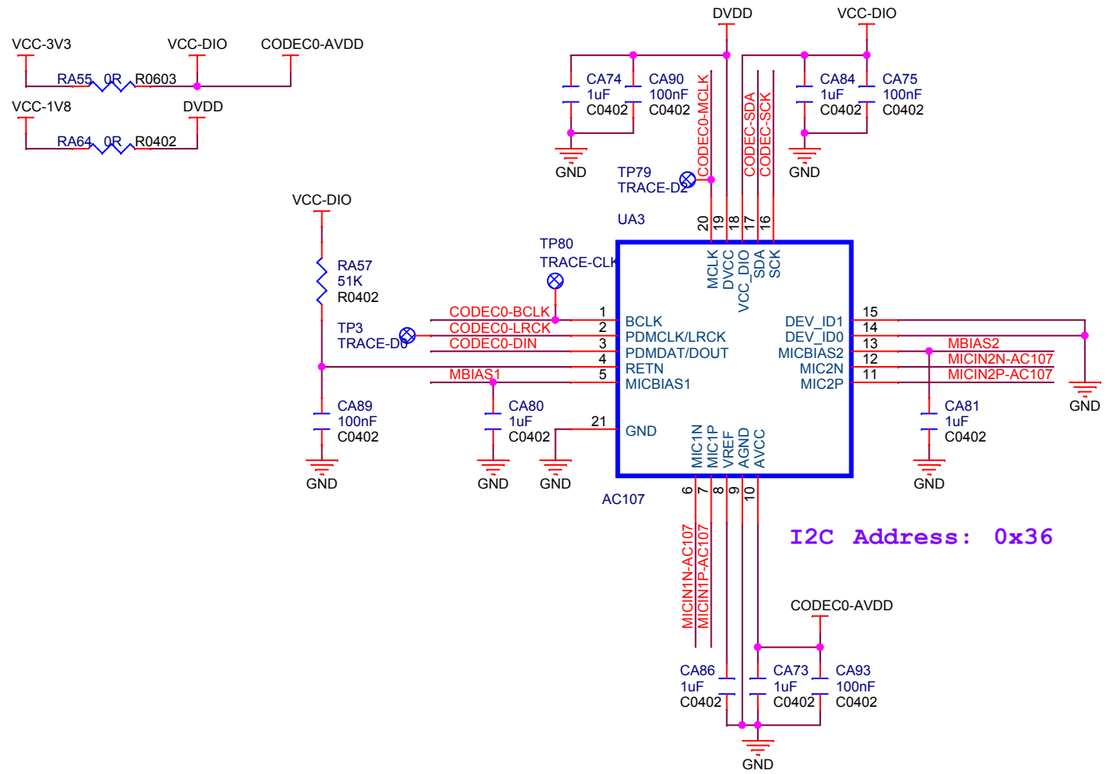

AEC

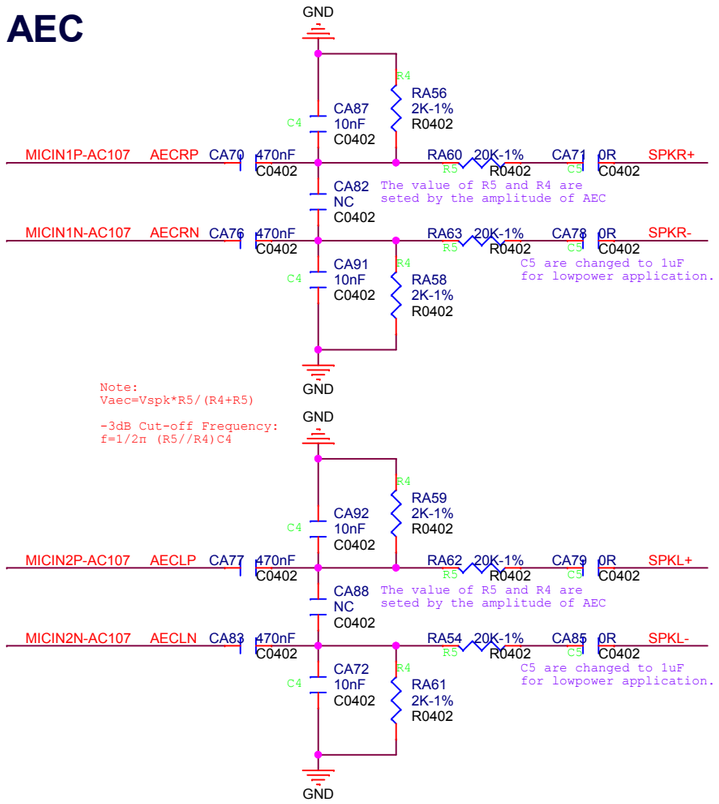

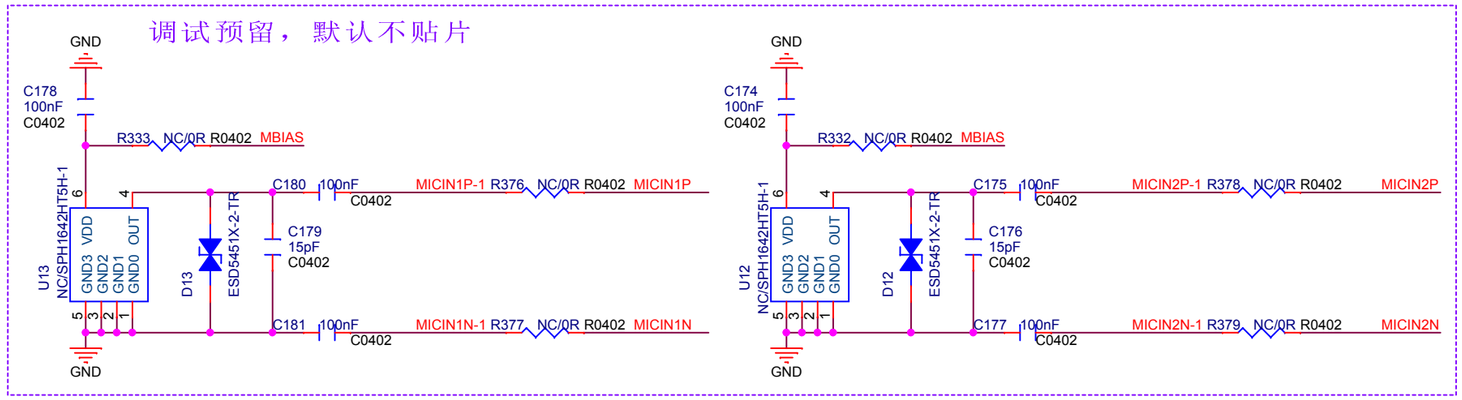

AllWinner Technology Co.,Ltd		
Design Name: A523-EVB-AXP717C-LPDDR4-4X		
Size: A3	Page Name: 19 AUDIO AC107	Rev
Date: Thursday, November 17, 2022	Sheet 19 of 27	

SD CARD

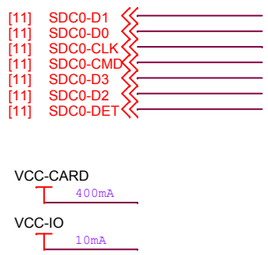

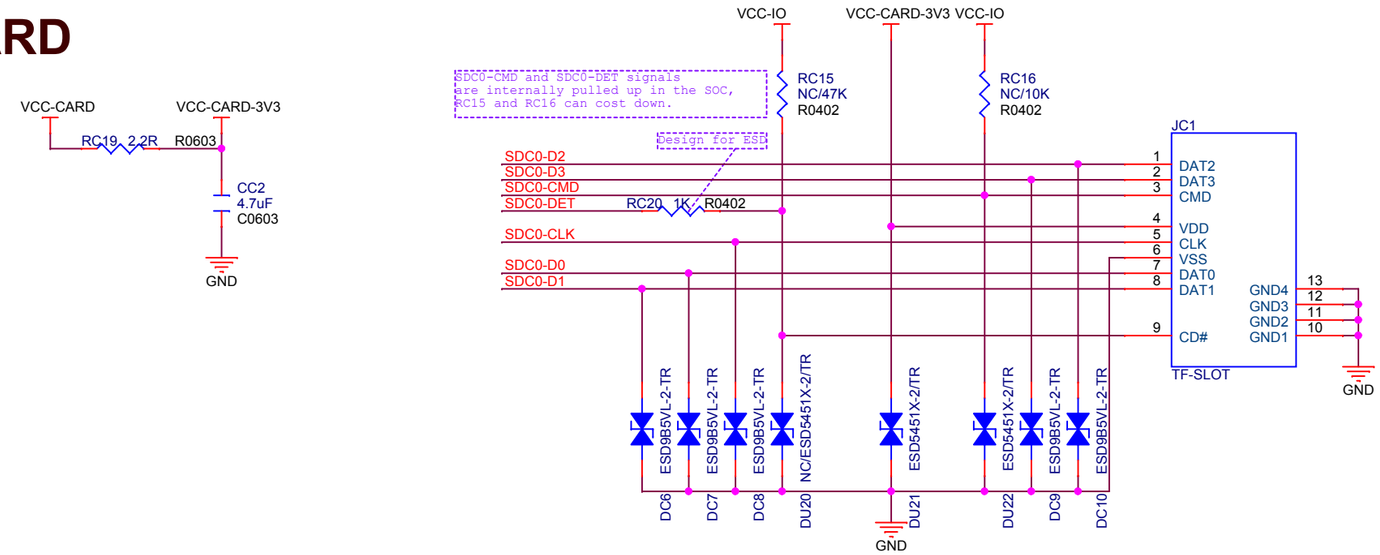

USB2.0 OTG

上拉电阻与 所配置io的电源必保 持 一 致，防止 漏电 问题!

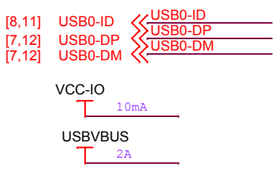

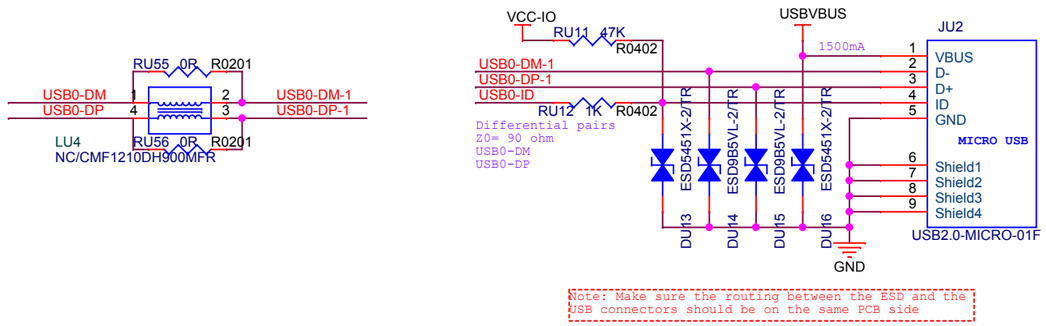

USB2.0 HOST

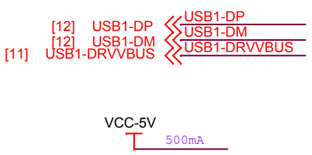

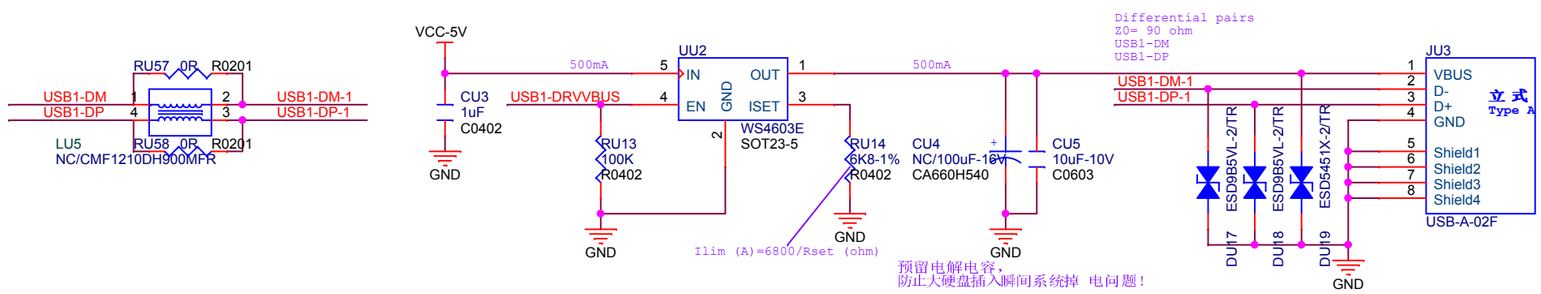

AllWinner Technology Co.,Ltd		
Design Name: A523-EVB-AXP717C-LPDDR4-4X		
Size: A3	Page Name: 20 T-CARD/USB2.0	Rev
Date: Tuesday, November 15, 2022	Sheet 20 of 27	

XR829 ON BOARD

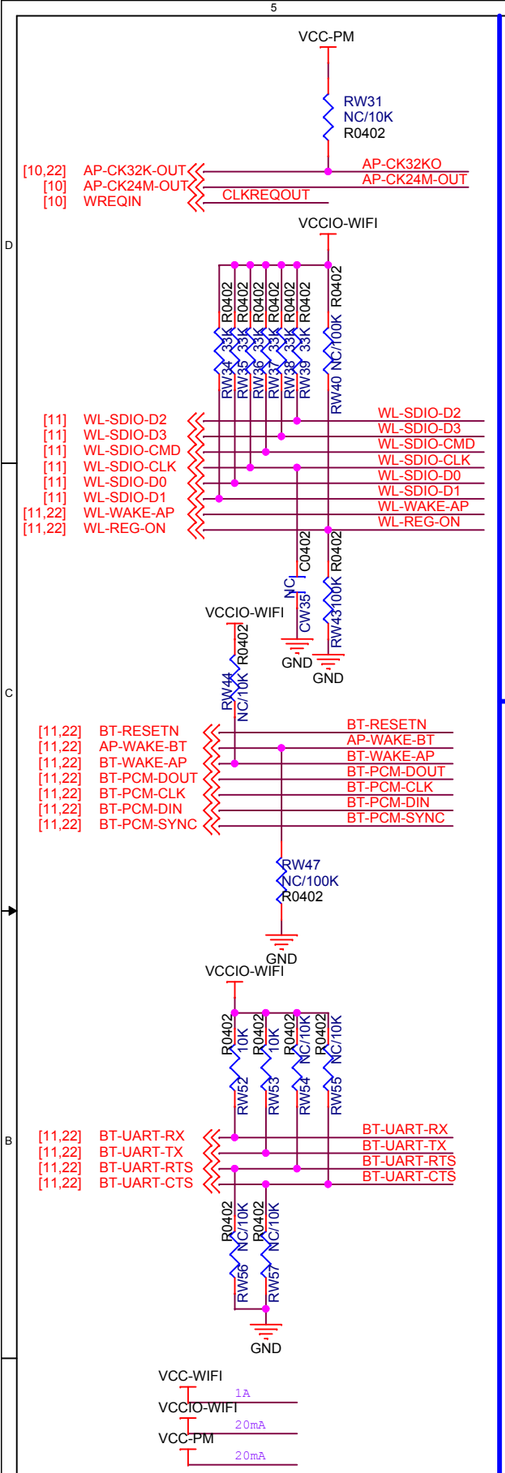

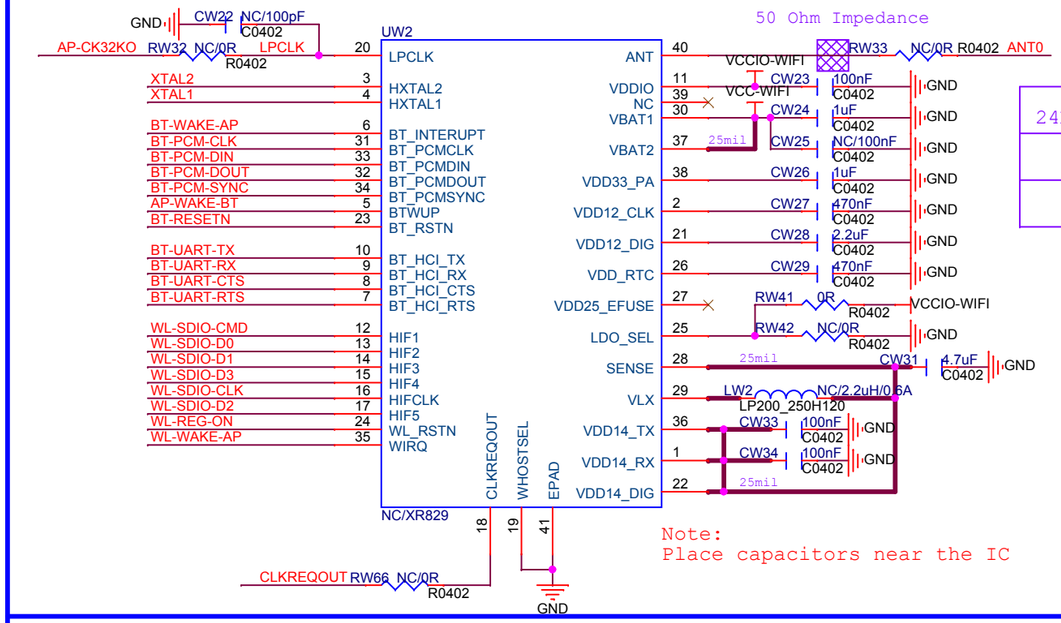

Note:
Place capacitors near the IC

XR829 24M Crystal source	C	D	E
Crystal	24M-16pF-10PPM	C1=20pF,C2=20pF	R1=0R,R2=NC
DCXO-RFCLK	NC	C1=0R,C2=NC	R1=NC,R2=0R

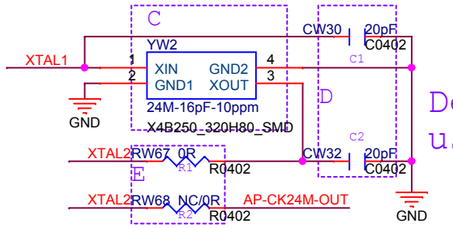

Default:
use 24M crystal

XR829 must be used in conjunction with this crystal :
E3SB24E004304E,CL=20pF

AW869X Default:AW869A

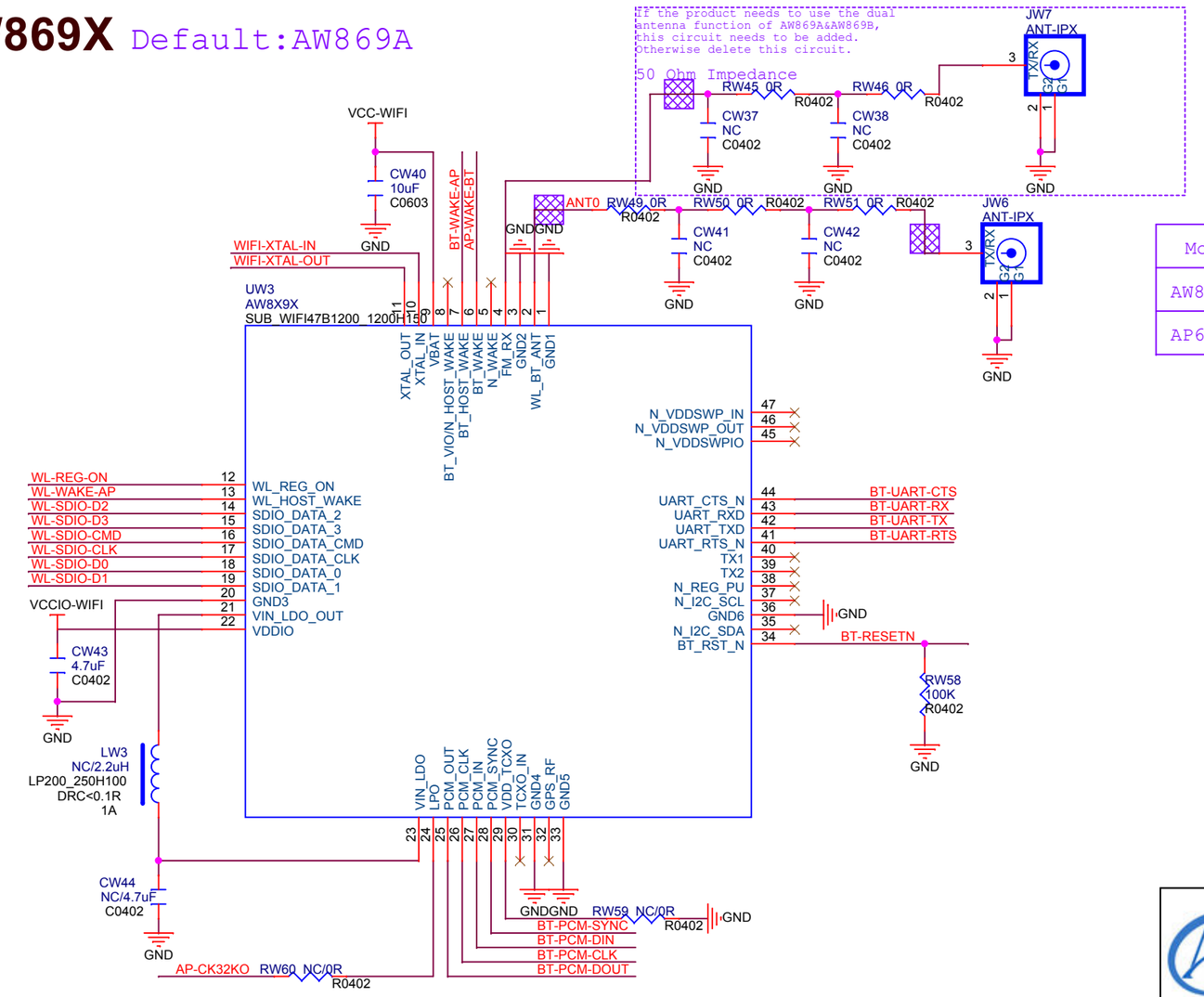

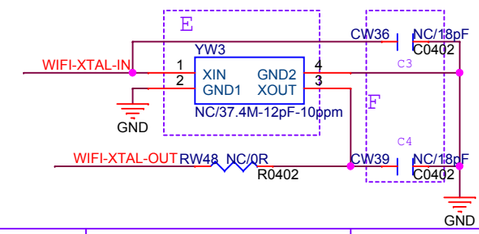

Model	E	F
AW869X	37.4M-12pF-10ppm	C3=C4=18pF
AP6281S	59.97M-9ppm-8pF	C3=C4=8pF

Model	Specifications	VCC-WIFI	VCCIO-WIFI
XR829	2.4G,BT4.2	2.7~5.5V @400mA	3.3/1.8V @10mA
AW869A	2.4G&5G,WiFi6,40MHz, BT5.2	3.3V@450mA	1.8V@xxxmA
AW869B	2.4G,WiFi6,40MHz, BT5.2	3.3V@350mA	1.8V@xxxmA
AW869C	2.4G&5G,WiFi6,80MHz, BT5.2	3.3V@xxxmA	1.8V@xxxmA
AP6281S	2.4G&5G,WiFi6E,80MHz, BT5.2	3.3V@1A	1.8V@xxxmA

AllWinner Technology Co.,Ltd

Design Name: A523-EVB-AXP717C-LPDDR4-4X

Size: A3 | Page Name: 21 WIFI/BT SDIO AW869A | Rev

Date: Tuesday, November 15, 2022 | Sheet 21 of 27

AP6275P

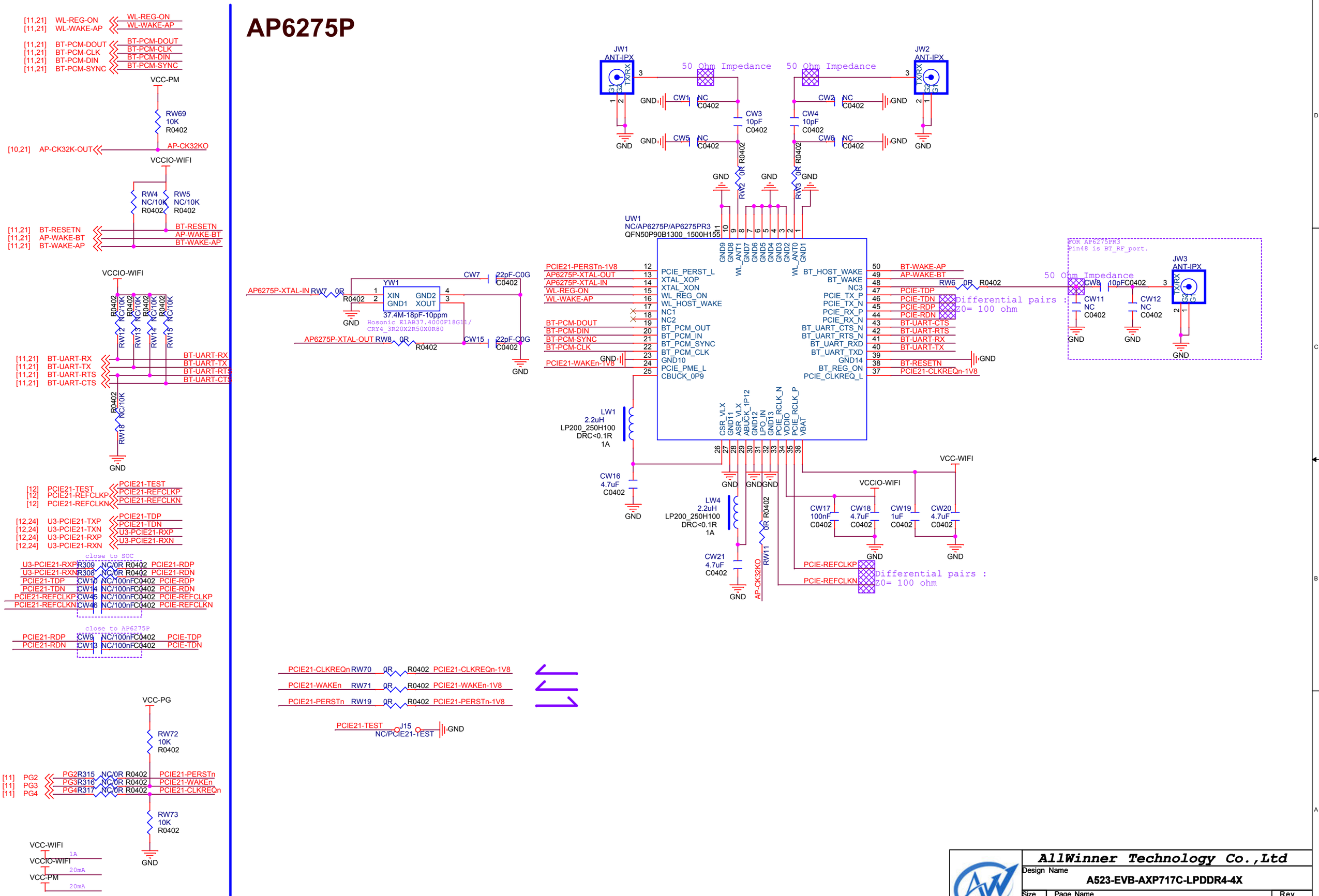

AllWinner Technology Co.,Ltd		
Design Name: A523-EVB-AXP717C-LPDDR4-4X		
Size: A3	Page Name: 22 WIFI/BT PCIE AP6275P	Rev
Date: Tuesday, November 15, 2022	Sheet 22 of 27	

RGMII

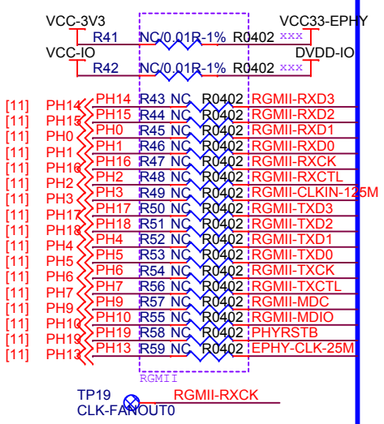

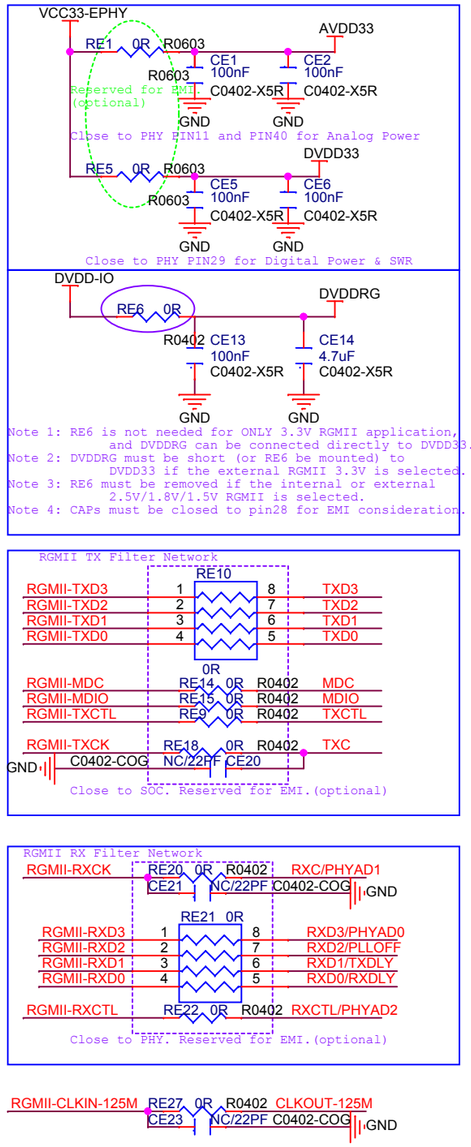

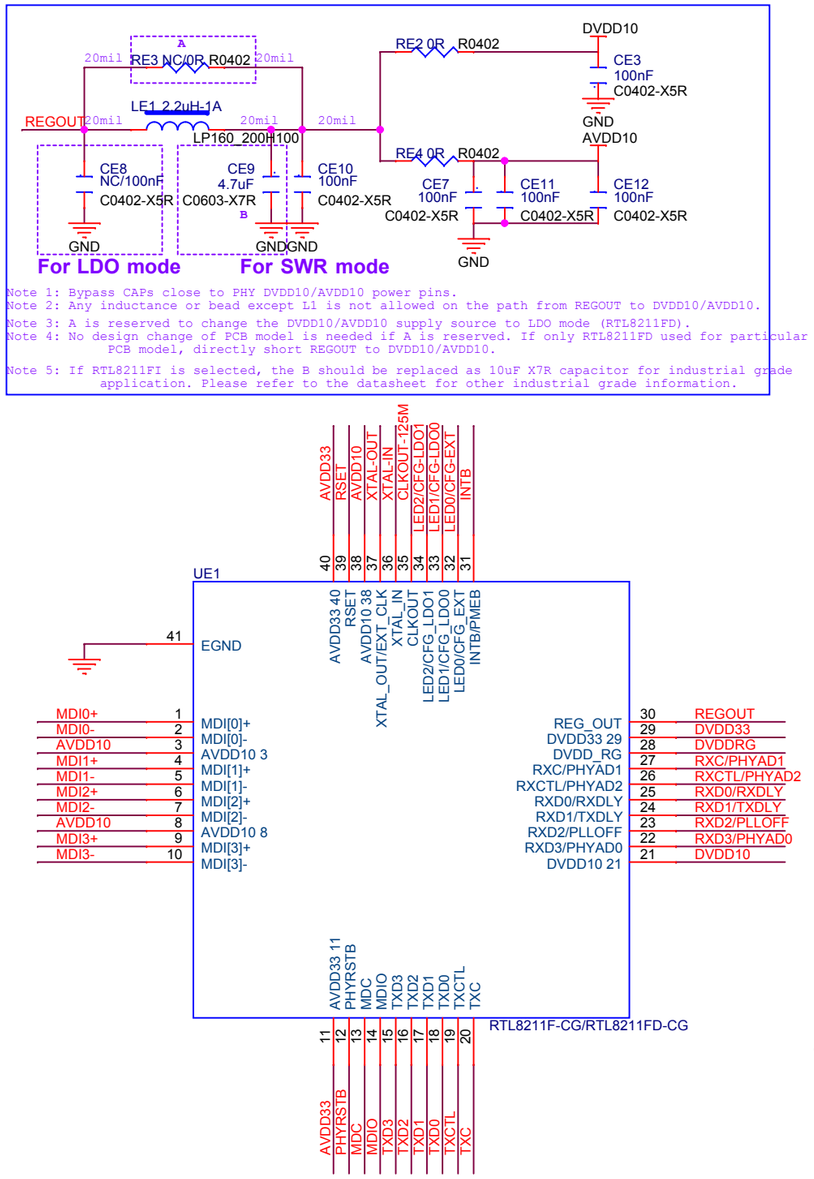

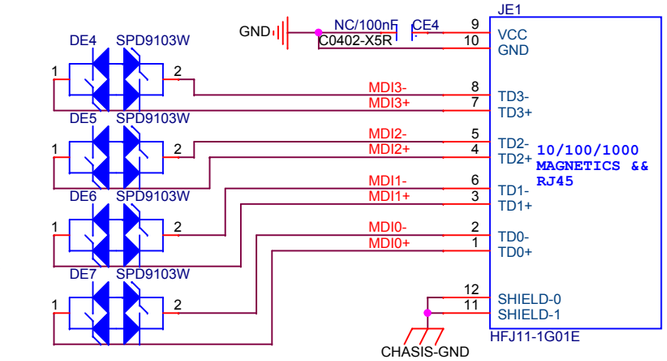

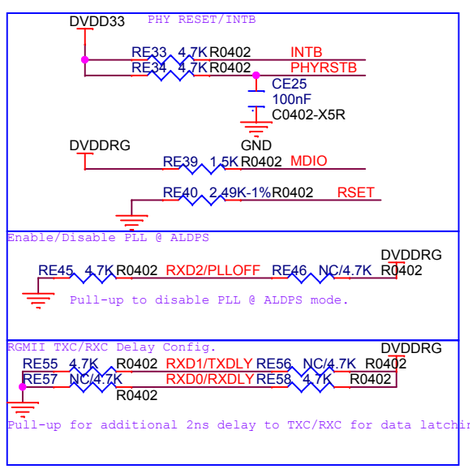

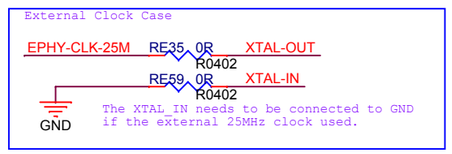

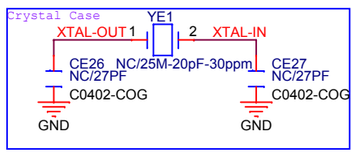

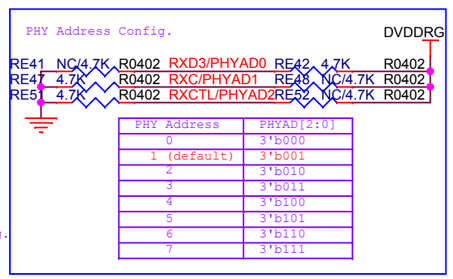

PHY Address	PHYAD[2:0]
0	3'b000
1 (default)	3'b001
2	3'b010
3	3'b011
4	3'b100
5	3'b101
6	3'b110
7	3'b111

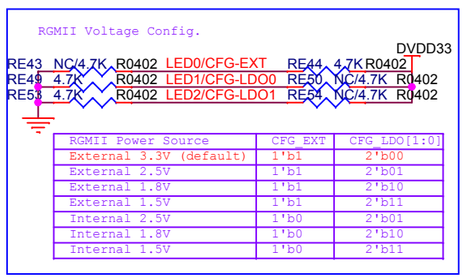

RGMII Power Source	CFG_EXT	CFG_LDO[1:0]
External 3.3V (default)	1'b1	2'b00
External 2.5V	1'b1	2'b01
External 1.8V	1'b1	2'b10
External 1.5V	1'b1	2'b11
Internal 2.5V	1'b0	2'b01
Internal 1.8V	1'b0	2'b10
Internal 1.5V	1'b0	2'b11

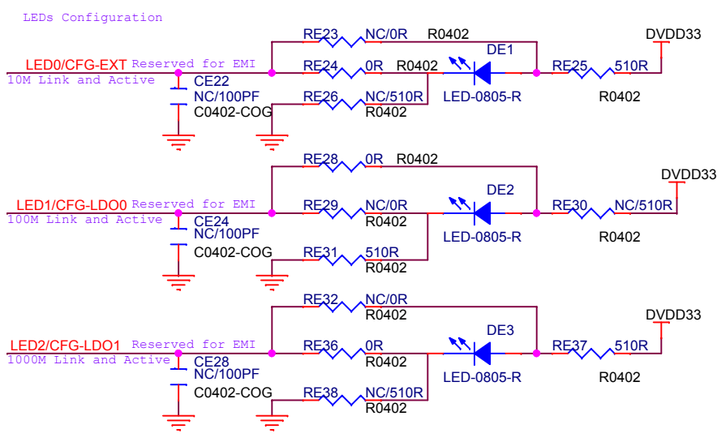

	LED Resistances Setting
CFG-EXT=1'b1	RE23(NC), RE24, RE25, RE26(NC)
CFG-EXT=1'b0	RE23, RE24(NC), RE25(NC), RE26
CFG-LDO0=1'b1	RE28(NC), RE29, RE30, R31(NC)
CFG-LDO0=1'b0	RE28, RE29(NC), RE30(NC), RE31
CFG-LDO1=1'b1	RE32(NC), RE36, RE37, RE38(NC)
CFG-LDO1=1'b0	RE32, RE36(NC), RE37(NC), RE38

AllWinner Technology Co.,Ltd

Design Name: A523-EVB-AXP717C-LPDDR4-4X

Size: A3 | Page Name: 23 RGMII | Rev

Date: Tuesday, November 15, 2022 | Sheet 23 of 27

TYPEC

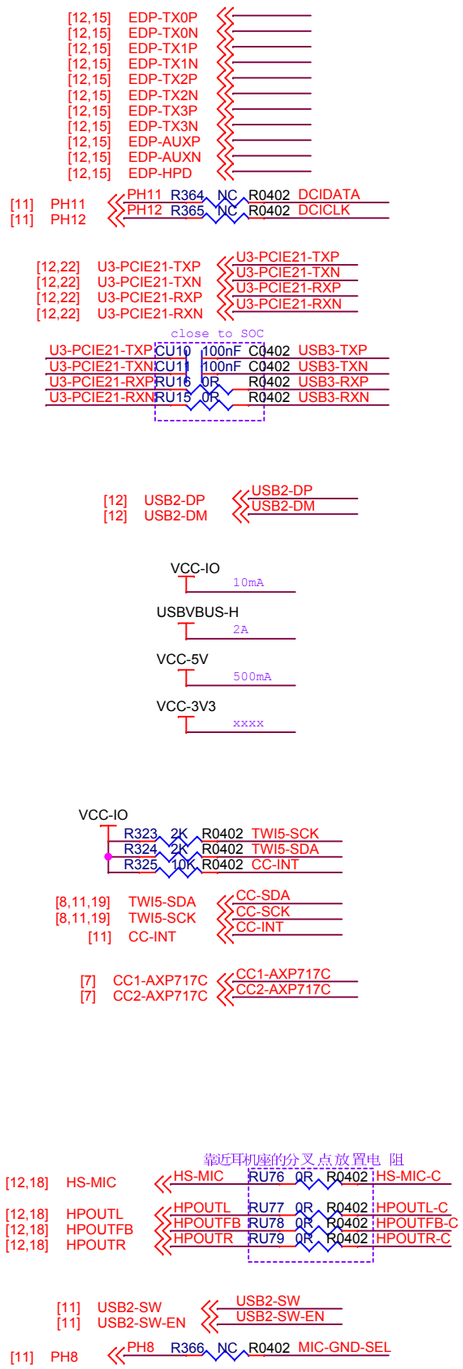

EDP1.3&USB3 SWITCH

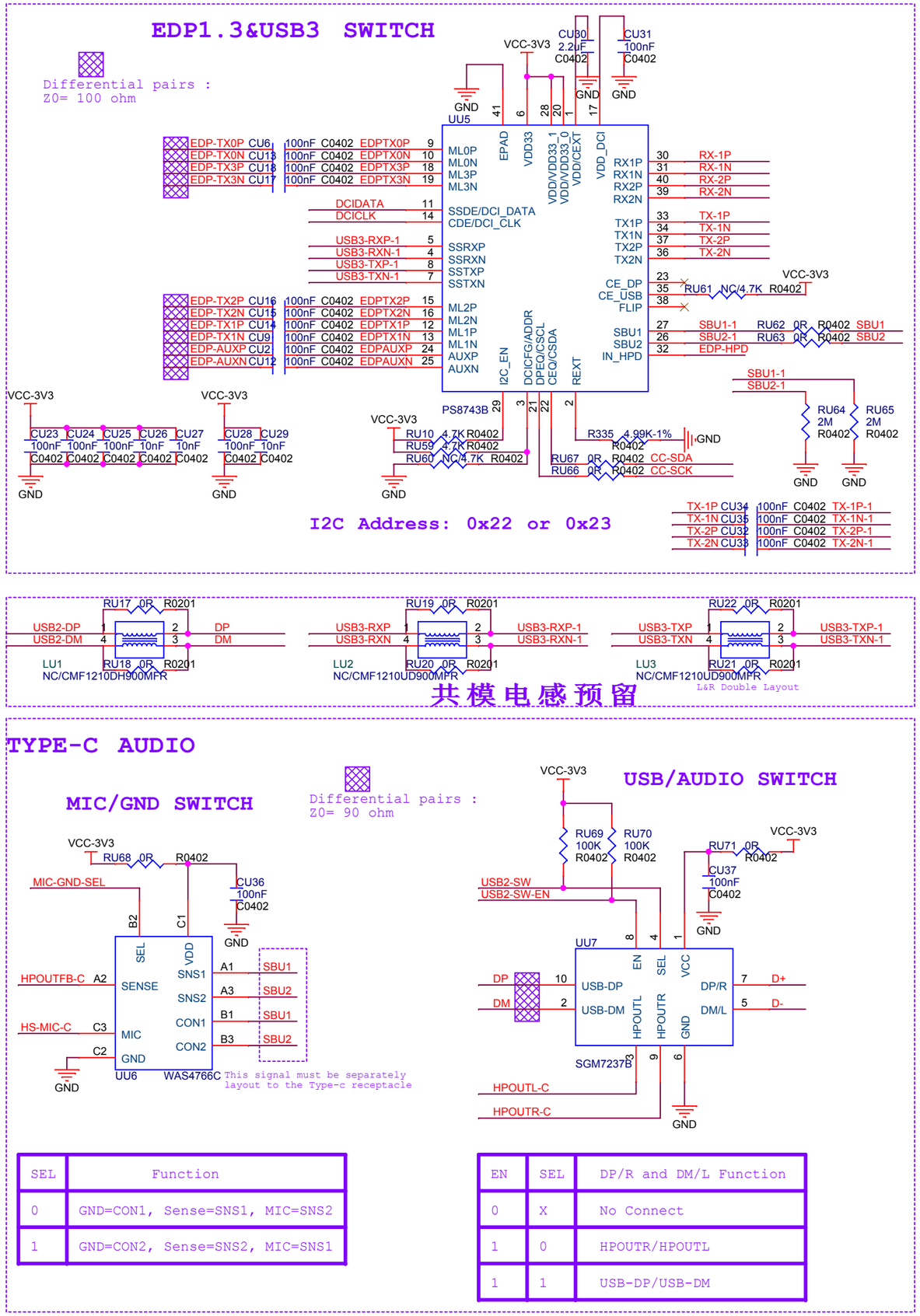

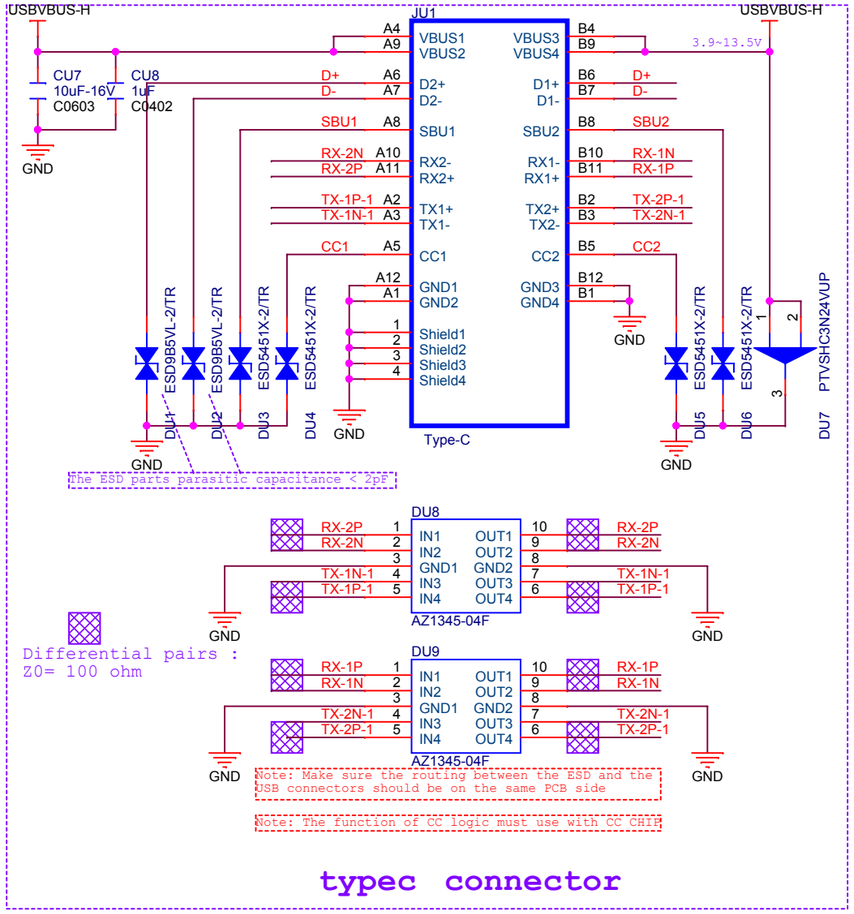

TYPE-C AUDIO

SEL	Function
0	GND=CON1, Sense=SNS1, MIC=SNS2
1	GND=CON2, Sense=SNS2, MIC=SNS1

EN	SEL	DP/R and DM/L Function
0	X	No Connect
1	0	HPOUTR/HPOUTL
1	1	USB-DP/USB-DM

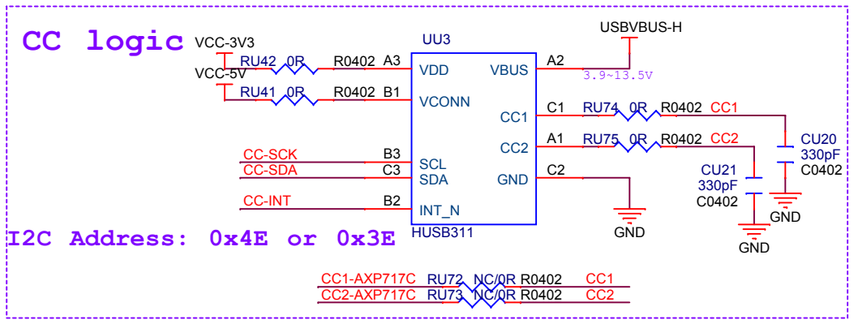

AllWinner Technology Co.,Ltd

Design Name: A523-EVB-AXP717C-LPDDR4-4X

Size: A3 | Page Name: 24 TYPEC-U3/DP/U2/AUDIO | Rev

Date: Tuesday, November 15, 2022 | Sheet 24 of 27

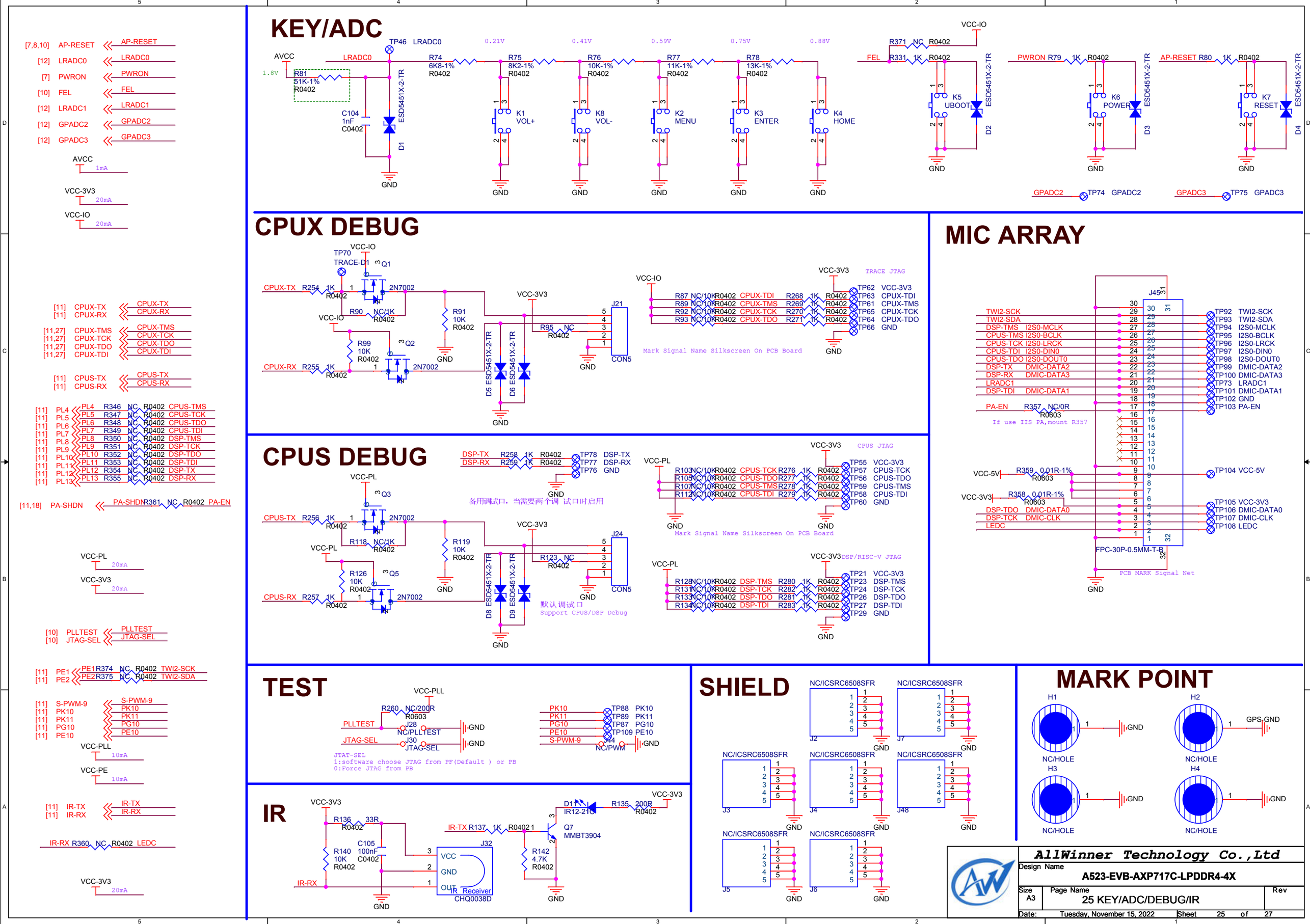
KEY/ADC
CPUX DEBUG
MIC ARRAY
CPUS DEBUG
TEST
SHIELD
MARK POINT
IR
AllWinner Technology Co.,Ltd
Design Name
A523-EVB-AXP717C-LPDDR4-4X
Size A3
Page Name
25 KEY/ADC/DEBUG/IR
Rev
Date: Tuesday, November 15, 2022
Sheet 25 of 27

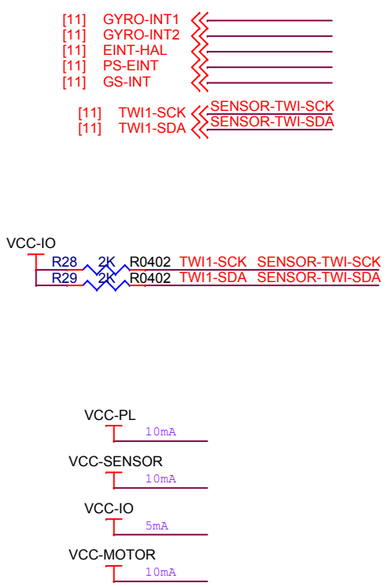

Gyroscope

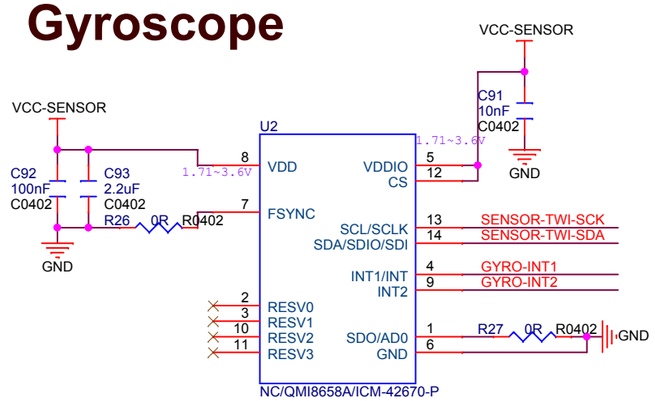

I2C Address: 0x68

Hall switch

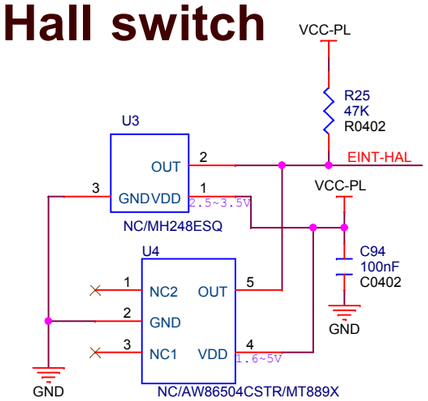

Magnetometer

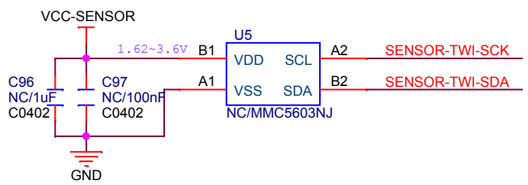

MMC5603NJ:1.62~3.6V I2C Address=0x30
AK09918C:1.65~1.95V I2C Address=0x0C

Note:AK09918C need use 1.8V POWER&I2C

ALS Sensor

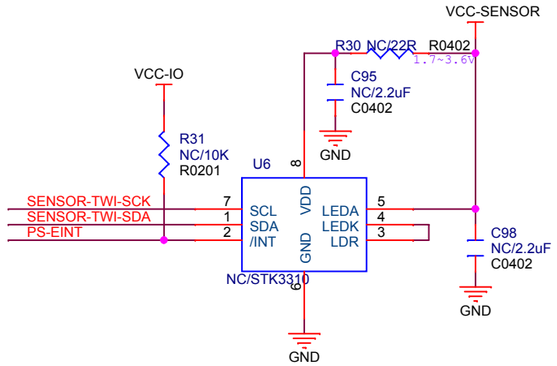

I2C Address: 0x48

3axis G-sensor

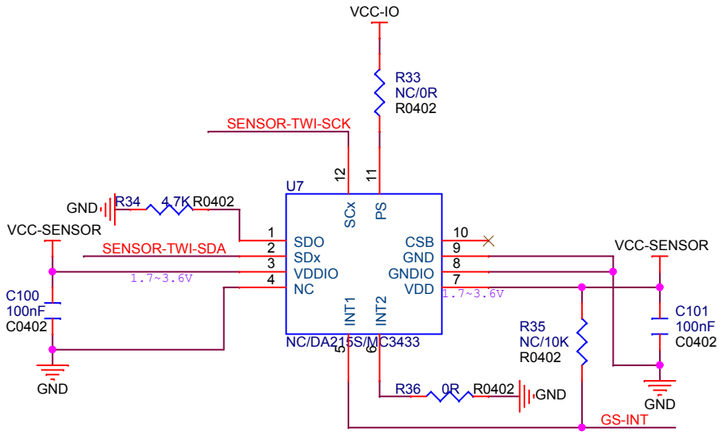

I2C Address: 0x19

Motor

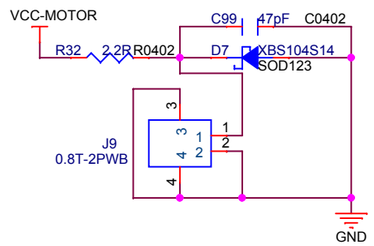

AllWinner Technology Co.,Ltd		
Design Name: A523-EVB-AXP717C-LPDDR4-4X		
Size: A3	Page Name: 26 Sensor	Rev
Date: Saturday, November 19, 2022	Sheet 26 of 27	

GPS

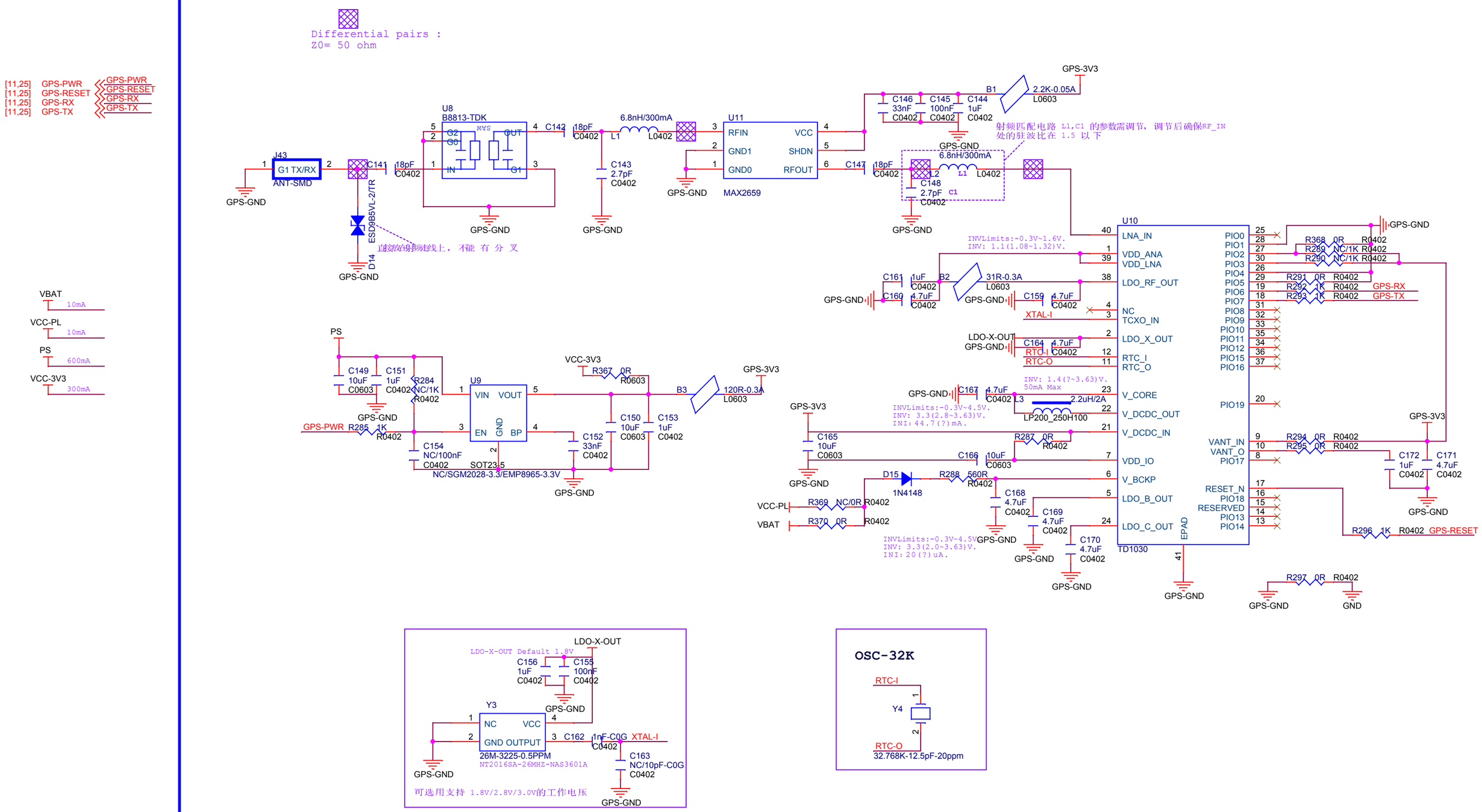

AllWinner Technology Co.,Ltd	
Design Name	A523-EVB-AXP717C-LPDDR4-4X
Size A3	Page Name 27 GPS
Rev	
Date: Tuesday, November 15, 2022	Sheet 27 of 27