VERSION HISTORY

Index:

Page1 01 VERSION HISTORY
Page2 02 BLOCK DIAGRAM
Page3 03 POWER TREE
Page4 04 POWER SEQUENCE
Page5 05 GPIO ASSIGNMENT
Page6 06 TWI&UART MAP
Page7 07 POWER-AXP717C+AXP323
Page8 08 POWER-ACIN
Page9 09 A523 DDR
Page10 10 A523 SYS
Page11 11 A523 GPIO
Page12 12 A523 Analog&High-speed
Page13 13 EMMC
Page14 14 MIPI LCM
Page15 15 CTP
Page16 16 CAMERA
Page17 17 AUDIO
Page18 18 AUDIO AC107
Page19 19 WIFI/BT AW869X/XR829
Page20 20 USB/T-CARD
Page21 21 KEY/DEBUG
Page22 22 Sensor

Page01 07 POWER-AXP717C+AXP323_2S lion
Page02 14 EDP LCM 4LANE
Page03 17 TYPEC-U3/DP/U2/AUDIO
Page04 19 WIFI/BT PCIE AP6275P
Page05 23 RGMII
Page06 24 MEMS DMIC/IR
Page07 25 Quick Charger_1S lion
Page08 26 Quick Charger_2S lion
Page09 27 GPS

Revision	Description	Date
Ver 1.0	Release version	2023-1-7
Ver 2.0	Add option page and fix mistakes	2023-12-6
Ver 2.1	Add DP OUT AND GPS Ciruit	2024-03-06
Ver 2.2	26 Quick Charger_2S lion	2024-05-13
Ver 2.3	Add VCC-MCSI note Modify RP320 note.	2024-06-11
Ver 2.4	Modify HUSB311 circuit.	2024-07-12

Description

Note

Option

BLOCK

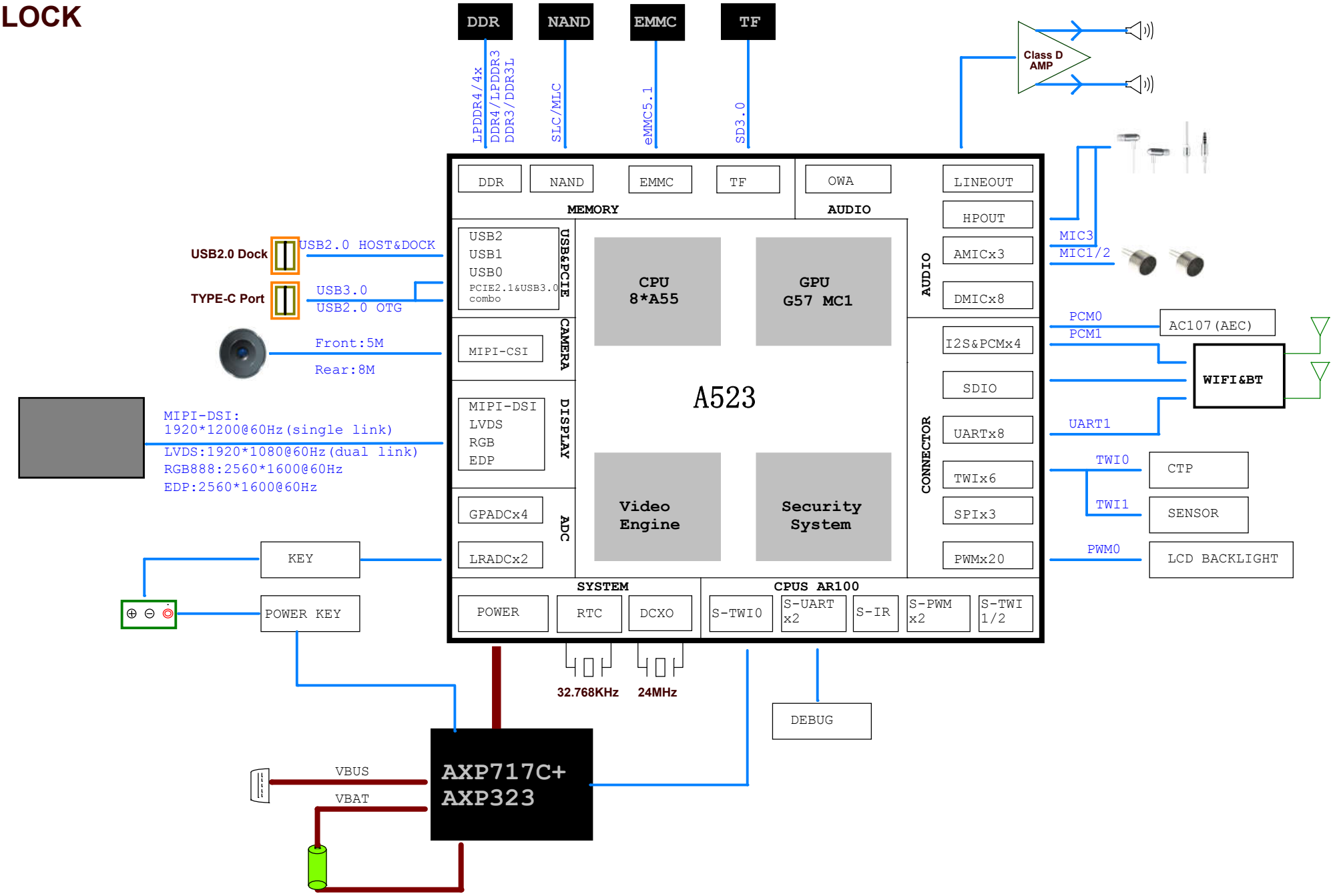

AllWinner Technology Co.,Ltd			
Design Name	A523-STD-AXP717C-AXP323-LPDDR4-4X		
Size A3	Page Name 02 BLOCK DIAGRAM		Rev
Date: Tuesday, June 11, 2024	Sheet 2 of 22		

POWER TREE

DEFAULT POWER ON

DEFAULT POWER OFF

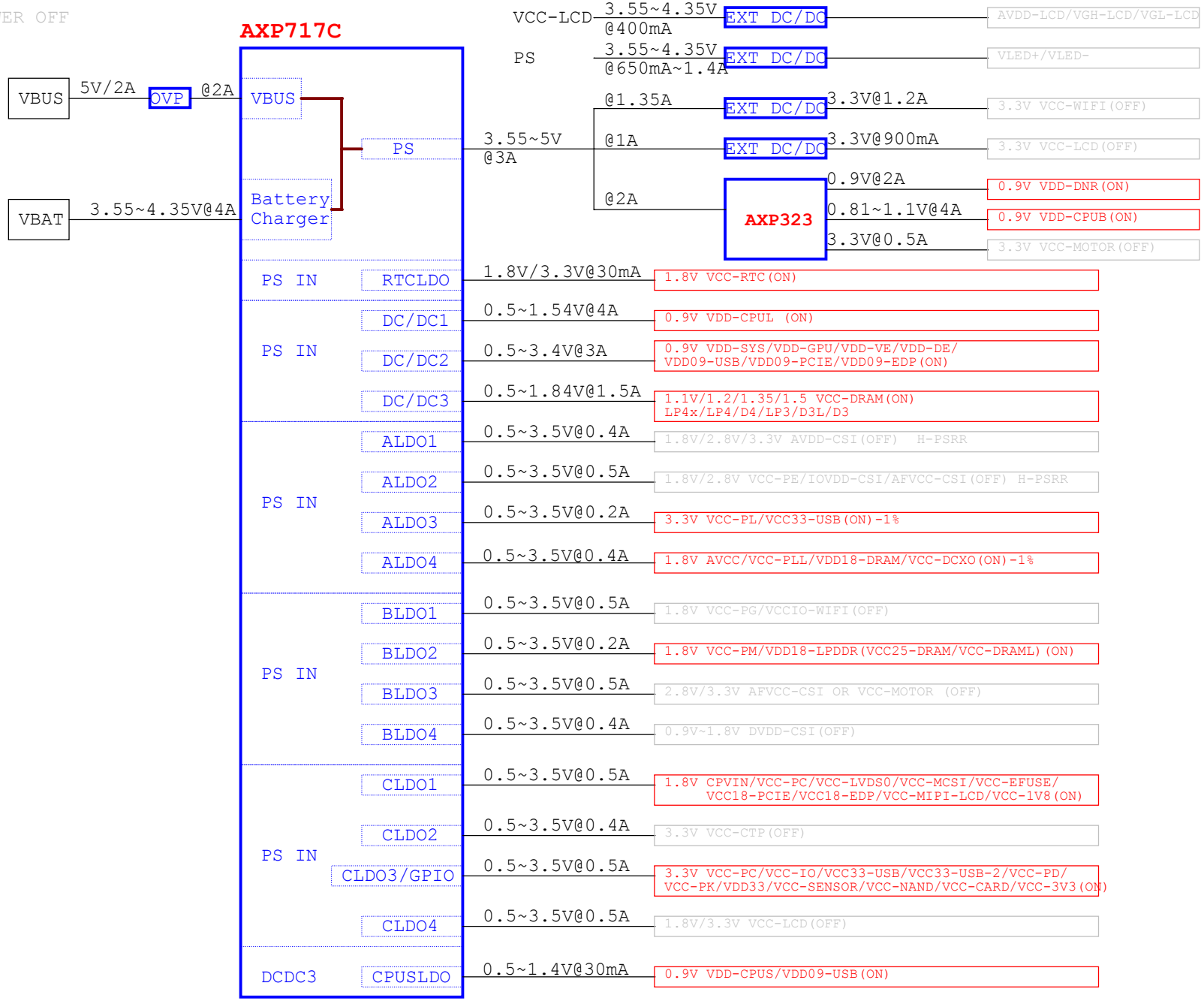

AllWinner Technology Co.,Ltd	
Design Name	A523-STD-AXP717C-AXP323-LPDDR4-4X
Size A3	Page Name 03 POWER TREE
Rev	
Date: Tuesday, June 11, 2024	Sheet 3 of 22

POWER SEQUENCE

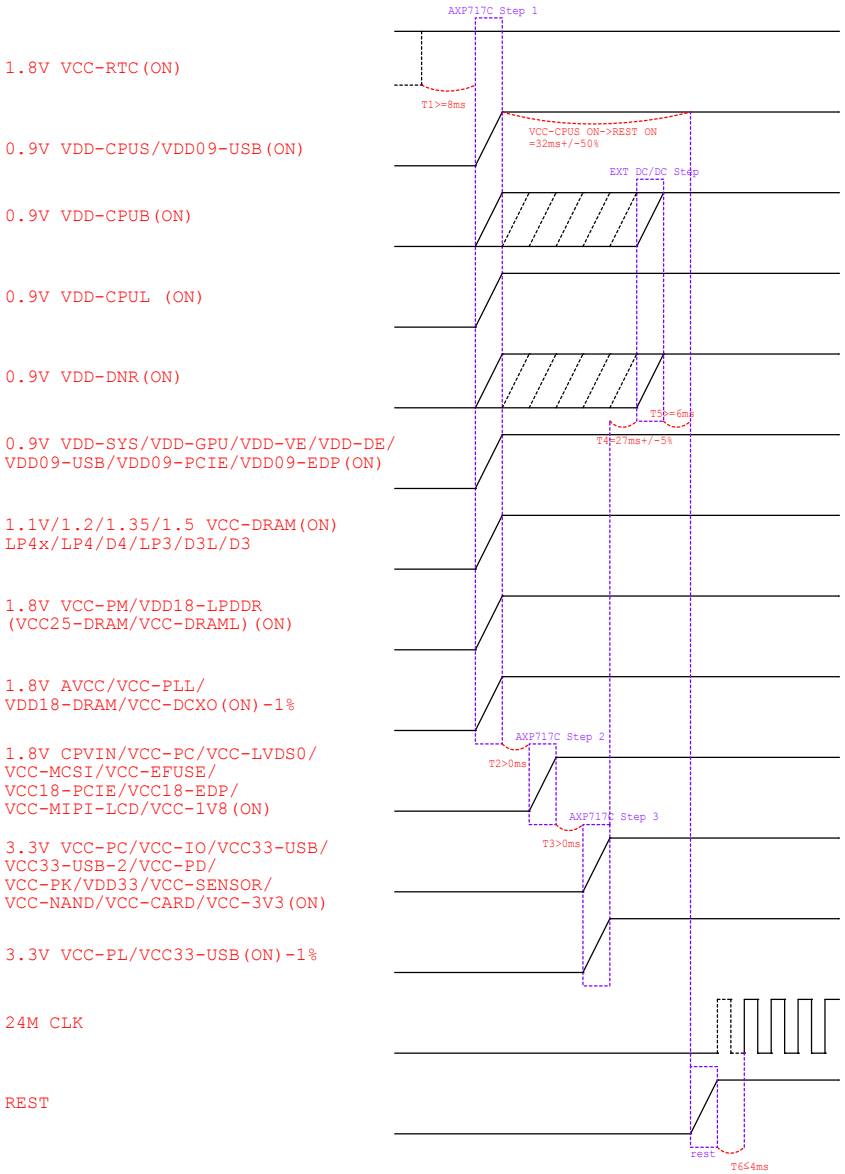

1.VCC-LVDS0 must be ramped before VCC-PD
2.VCC-MCSI must be ramped before VCC-PK
3.VCC-EFUSE must be ramped after VDD-SYS

SWITCH STATUS

	normal work	super standby	shut down	Android static main interface
1.8V VCC-RTC(ON)	ON	ON	ON	ON
0.9V VDD-CPUL (ON)	ON	OFF	OFF	ON
0.9V VDD-SYS/VDD-GPU/VDD-VE/VDD-DE/ VDD09-USB/VDD09-PCIE/VDD09-EDP(ON)	ON	OFF	OFF	ON
1.1V/1.2/1.35/1.5 VCC-DRAM(ON) LP4x/LP4/D4/LP3/D3L/D3	ON	ON	OFF	ON
1.8V/2.8V/3.3V AVDD-CSI(OFF) H-PSRR	ON/OFF	OFF	OFF	OFF
1.8V/2.8V VCC-PE/IOVDD-CSI/AFVCC-CSI(OFF) H-PSRR	ON/OFF	OFF	OFF	OFF
3.3V VCC-PL/VCC33-USB(ON)-1%	ON	ON	OFF	ON
1.8V AVCC/VCC-PLL/VDD18-DRAM/VCC-DCXO(ON)-1%	ON	OFF	OFF	ON
1.8V VCC-PG/VCCIO-WIFI(OFF)	ON/OFF	OFF	OFF	OFF
1.8V VCC-PM/VDD18-LPDDR(VCC25-DRAM/VCC-DRAML)(ON)	ON	ON	OFF	ON
2.8V/3.3V AFVCC-CSI OR VCC-MOTOR (OFF)	ON/OFF	OFF	OFF	OFF
0.9V~1.8V DVDD-CSI(OFF)	ON/OFF	OFF	OFF	OFF
1.8V CPVIN/VCC-PC/VCC-LVDS0/VCC-MCSI/VCC-EFUSE/ VCC18-PCIE/VCC18-EDP/VCC-MIPI-LCD/VCC-1V8(ON)	ON	OFF	OFF	ON
3.3V VCC-CTP(OFF)	ON/OFF	OFF	OFF	ON
3.3V VCC-PC/VCC-IO/VCC33-USB/VCC33-USB-2/VCC-PD/ VCC-PK/VDD33/VCC-SENSOR/VCC-NAND/VCC-CARD/VCC-3V3(ON)	ON	OFF	OFF	ON
1.8V/3.3V VCC-LCD(OFF)	ON/OFF	OFF	OFF	ON
0.9V VDD-CPUS/VDD09-USB(ON)	ON	ON	OFF	ON
AVDD-LCD/VGH-LCD/VGL-LCD	ON/OFF	OFF	OFF	ON
VLED+/VLED-	ON/OFF	OFF	OFF	ON
3.3V VCC-WIFI(OFF)	ON/OFF	OFF	OFF	OFF
3.3V VCC-LCD(OFF)	ON/OFF	OFF	OFF	ON
0.9V VDD-DNR(ON)	ON	OFF	OFF	ON
0.9V VDD-CPUB(ON)	ON	OFF	OFF	ON

GPIO ASSIGNMENT

PIN	Define	CFG	Function
PB0	CPUX-TMS	4	DEBUG
PB1	CPUX-TCK	4	
PB2	CPUX-TDO	4	
PB3	CPUX-TDI	4	
PB4	I2S0-MCLK	3	I2S
PB5	I2S0-BCLK	3	
PB6	I2S0-LRCK	3	
PB7			
PB8	I2S0-DIN	3	
PB9	CPUX-TX	2	DEBUG
PB10	CPUX-RX	2	
PB11			
PB12			
PB13			
PB14			

PIN	Define	CFG	Function
PC0	SDC2-DS	3	eMMC
PC1	SDC2-RST	3	
PC2			
PC3			
PC4			
PC5	SDC2-CLK	3	
PC6	SDC2-CMD	3	
PC7			
PC8	SDC2-D3	3	
PC9	SDC2-D4	3	
PC10	SDC2-D0	3	
PC11	SDC2-D5	3	
PC12			
PC13	SDC2-D1	3	
PC14	SDC2-D6	3	
PC15	SDC2-D2	3	
PC16	SDC2-D7	3	

PIN	Define	CFG	Function
PF0	SDC0-D1	2	CARD
PF1	SDC0-D0	2	
PF2	SDC0-CLK	2	
PF3	SDC0-CMD	2	
PF4	SDC0-D3	2	
PF5	SDC0-D2	2	
PF6	SDC0-DET	0	

PIN	Define	CFG	Function
PD0			LCD
PD1			
PD2			
PD3			
PD4			
PD5			
PD6			
PD7			
PD8			
PD9			
PD10	MIPI-DSI1-DP0	4	
PD11	MIPI-DSI1-DN0	4	
PD12	MIPI-DSI1-DP1	4	
PD13	MIPI-DSI1-DN1	4	
PD14	MIPI-DSI1-CKP	4	
PD15	MIPI-DSI1-CKN	4	
PD16	MIPI-DSI1-DP2	4	
PD17	MIPI-DSI1-DN2	4	
PD18	MIPI-DSI1-DP3	4	
PD19	MIPI-DSI1-DN3	4	
PD20			
PD21			
PD22	LCD-RST	1	
PD23	LCD-PWM	3	

PIN	Define	CFG	Function
PG0	WL-SDIO-CLK	2	WIFI/BT
PG1	WL-SDIO-CMD	2	
PG2	WL-SDIO-D0	2	
PG3	WL-SDIO-D1	2	
PG4	WL-SDIO-D2	2	
PG5	WL-SDIO-D3	2	
PG6	BT-UART-RX	2	
PG7	BT-UART-TX	2	
PG8	BT-UART-CTS	2	
PG9	BT-UART-RTS	2	
PG10			
PG11	BT-PCM-CLK	3	
PG12	BT-PCM-SYNC	3	
PG13	BT-PCM-DIN	3	
PG14	BT-PCM-DOUT	3	

PIN	Define	CFG	Function
PM0	WL-WAKE-AP	0	WIFI/BT
PM1	WL-REG-ON	1	
PM2	BT-RESETN	1	
PM3	AP-WAKE-BT	1	
PM4	BT-WAKE-AP	0	
PM5	WL-DIS-N	1	

PIN	Define	CFG	Function
PH0	TWI0-SCK	2	TWI
PH1	TWI0-SDA	2	
PH2	TWI1-SCK	2	
PH3	TWI1-SDA	2	
PH4	PS-EINT	14	GPIO
PH5	OVP-ACOK	0	
PH6	PA-SHDN	1	
PH7	GMA340-SEL	1	
PH8	GMA340-OE	1	
PH9	CTP-INT	14	
PH10	CTP-RST	1	
PH11	GS-INT	14	
PH12	TWI3-SCK	3	TWI
PH13	TWI3-SDA	3	
PH14	3V3-1V8-EN	1	GPIO
PH15			
PH16			
PH17	DDR-PARA-SEL-GPIO	0	
PH18	LCD-BL-EN	1	
PH19			

PIN	Define	CFG	Function
PL0	PMU-SCK	2	CPUS
PL1	PMU-SDA	2	
PL2	USB-VBUSDET	0	
PL3	ACIN-DET	0	
PL4	USB0-EN	1	
PL5	GYRO-INT1	14	
PL6	GYRO-INT2	14	
PL7	VCC-WIFI-PWREN	1	
PL8	USB1-DRVVBUS	1	
PL9	EINT-HAL	14	
PL10	KD-EINT	14	
PL11	LED-EN	1	
PL12	USB-DRVVBUS	1	
PL13	CC-INT	14	

PIN	Define	CFG	Function
PK0	MCSIA-D0N	2	MIPI-CSI
PK1	MCSIA-D0P	2	
PK2	MCSIA-D1N	2	
PK3	MCSIA-D1P	2	
PK4	MCSIA-CKN	2	
PK5	MCSIA-CKP	2	
PK6	MCSIB-D0N	2	
PK7	MCSIB-D0P	2	
PK8	MCSIB-D1N	2	
PK9	MCSIB-D1P	2	
PK10			
PK11			
PK12	MCSIC-D0N	2	
PK13	MCSIC-D0P	2	
PK14	MCSIC-D1N	2	
PK15	MCSIC-D1P	2	
PK16	MCSIC-CKN	2	
PK17	MCSIC-CKP	2	
PK18			
PK19			
PK20			
PK21			
PK22			
PK23			

PIN	Define	CFG	Function
PE0			CAMERA
PE1			
PE2			
PE3			
PE4			
PE5			
PE6	MCSIB-STBY-F	1	
PE7	MCSIB-RST-F	1	
PE8	MCSIA-STBY-R	1	
PE9	MCSIA-RST-R	1	
PE10			
PE11			
PE12			
PE13	MCSI-SCK	2	
PE14	MCSI-SDA	2	
PE15	MCSI-MCLK	2	

TWI MAP

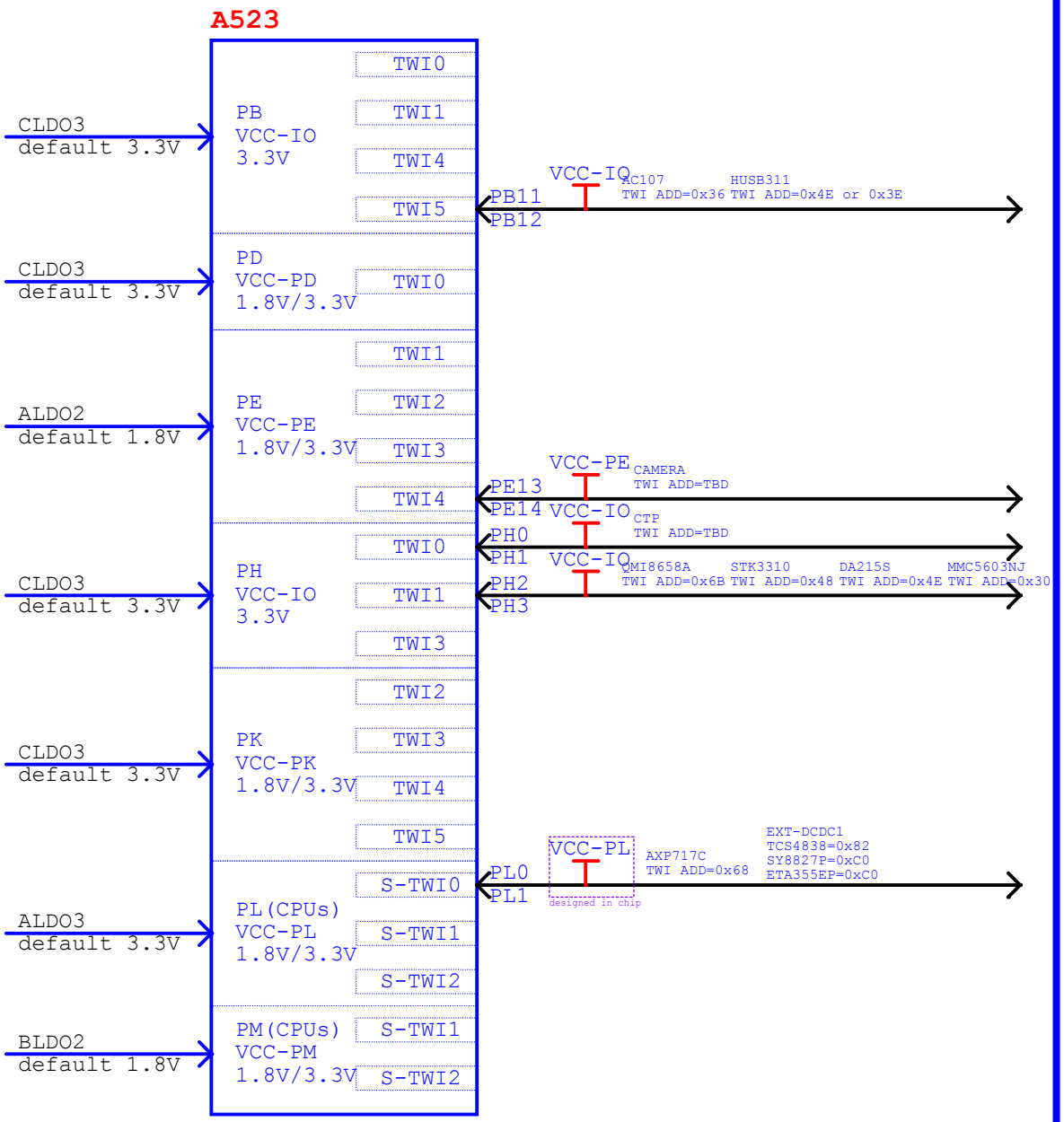

UART MAP

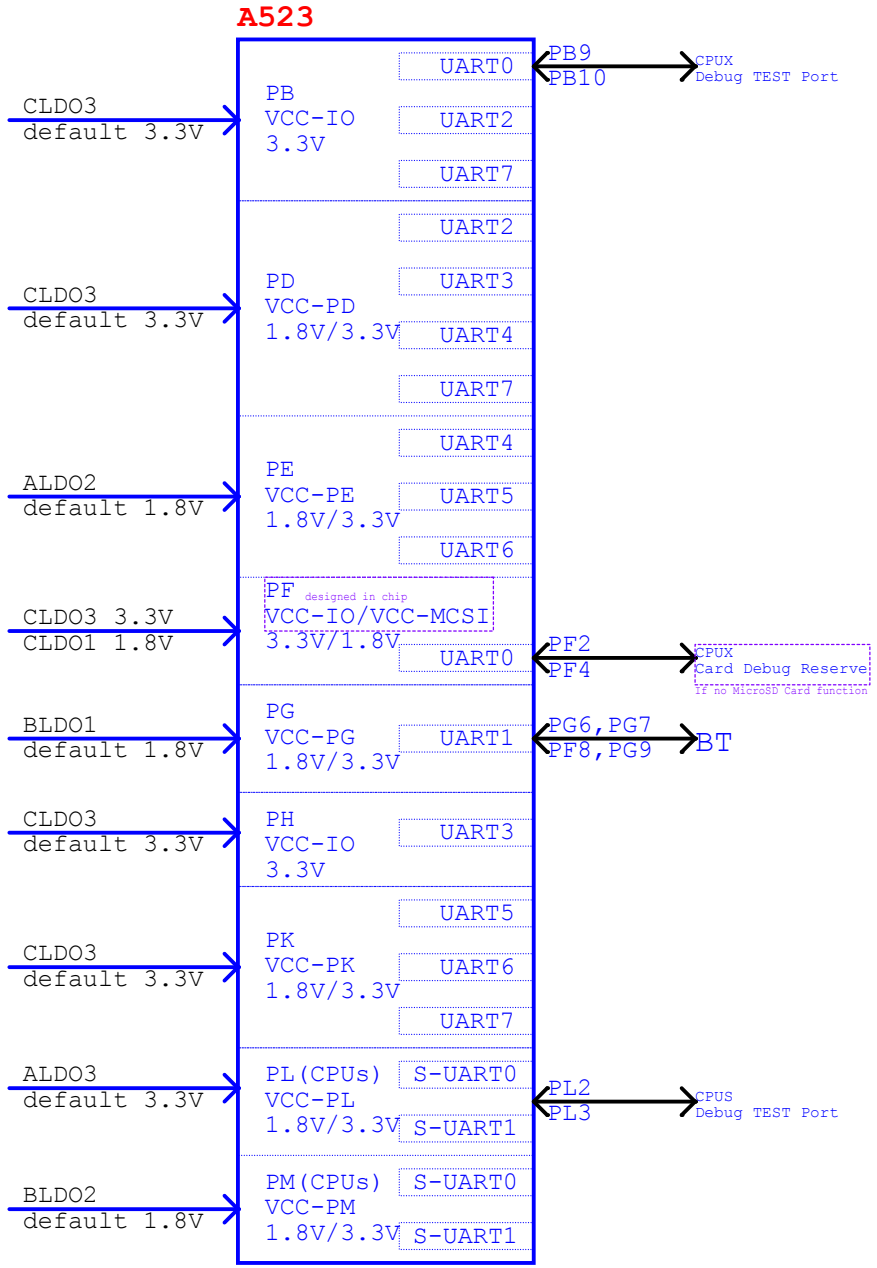

AllWinner Technology Co.,Ltd			
Design Name	A523-STD-AXP717C-AXP323-LPDDR4-4X		
Size A3	Page Name 06 TWI&UART MAP		Rev
Date: Tuesday, June 11, 2024	Sheet 6 of 22		

BAT

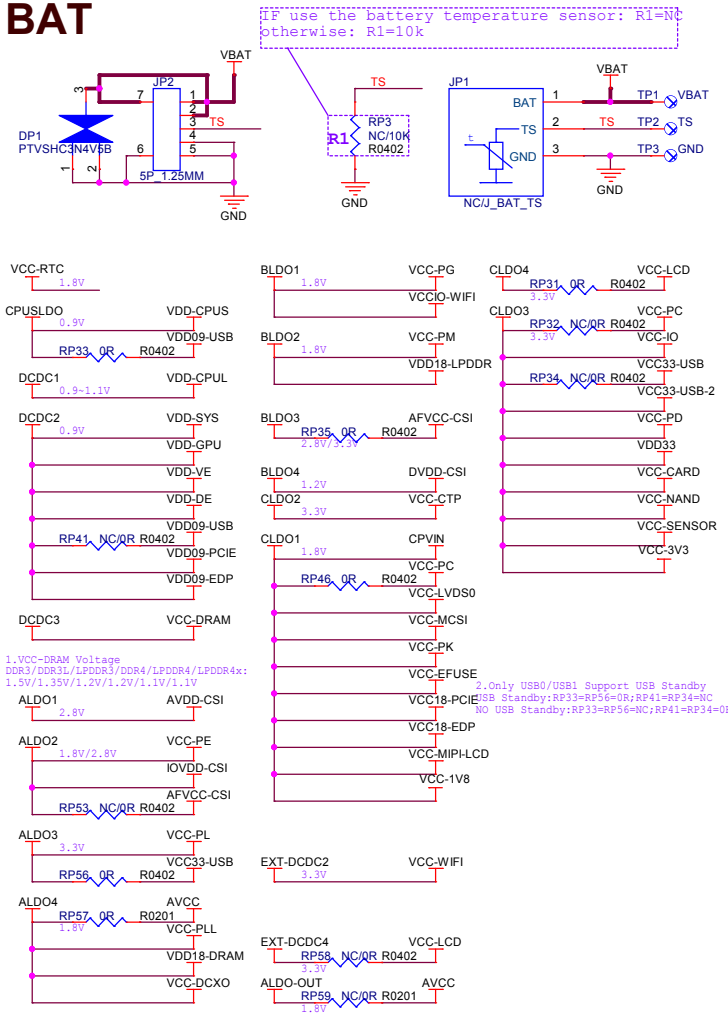

PMIC

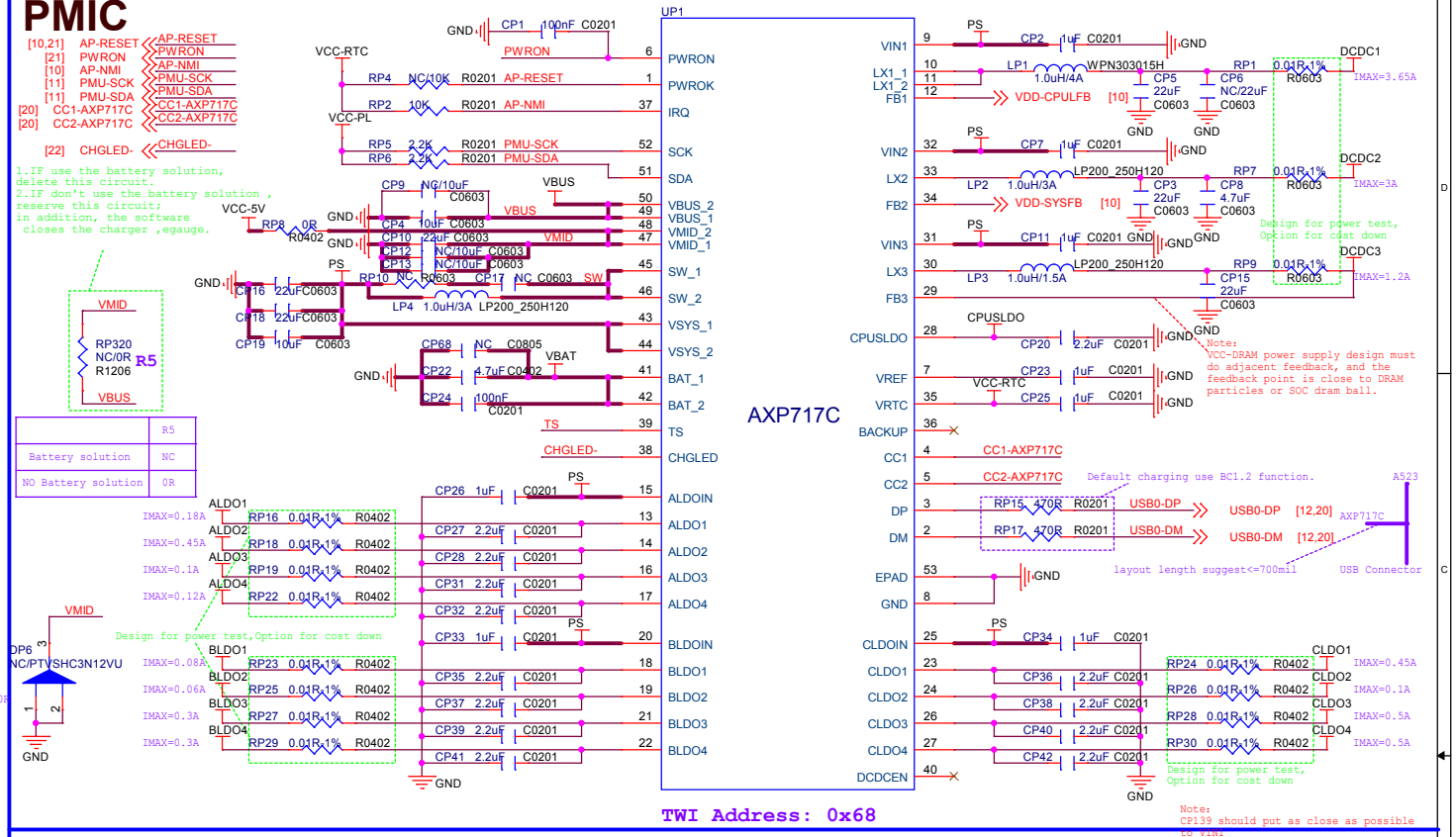

AXP323

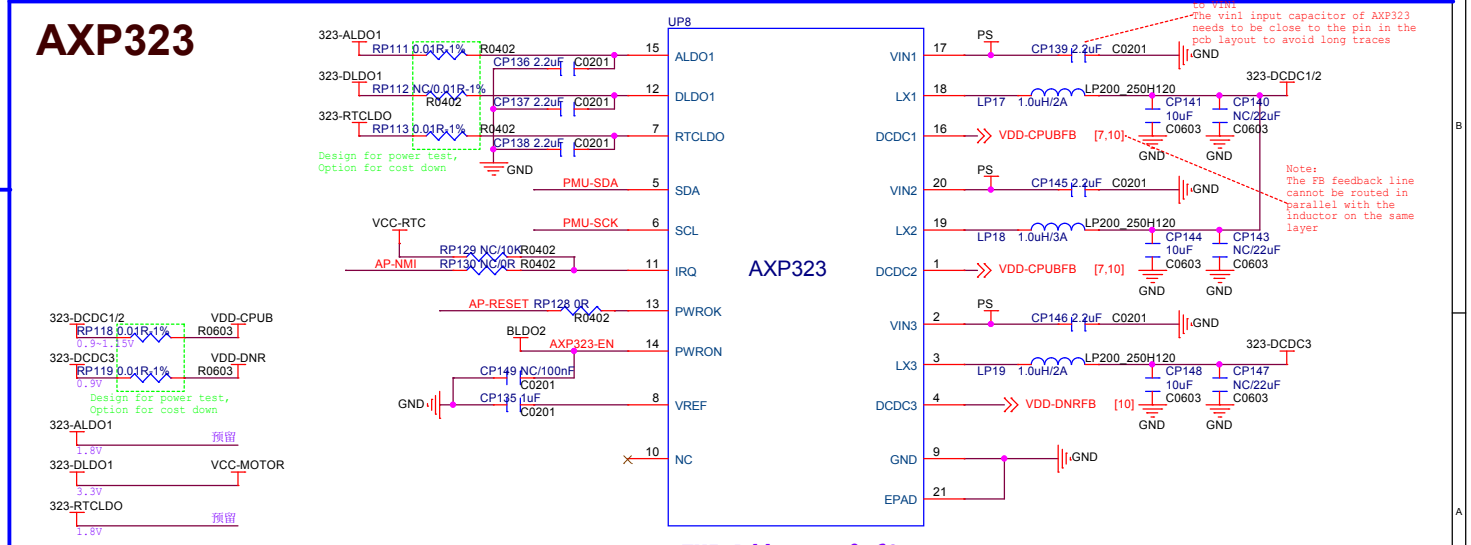

EXT DCDC

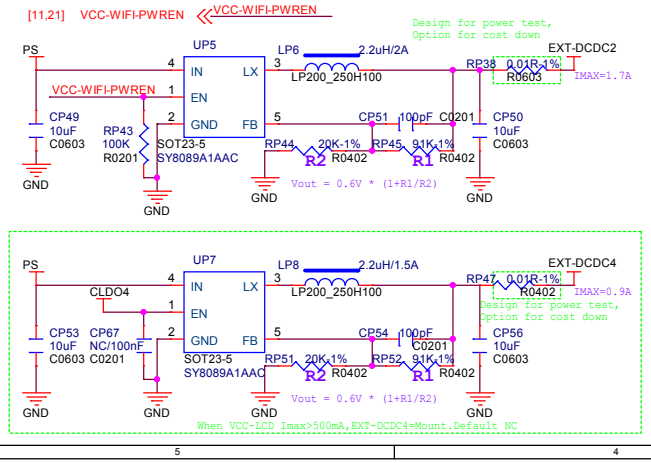

AllWinner Technology Co.,Ltd
Design Name: A523-STD-AXP717C-AXP323-LPDDR4-4X
Size: A3
Page Name: 07 POWER-AXP717C+AXP323
Rev
Date: Tuesday, June 18, 2024
Sheet 7 of 22

BAT

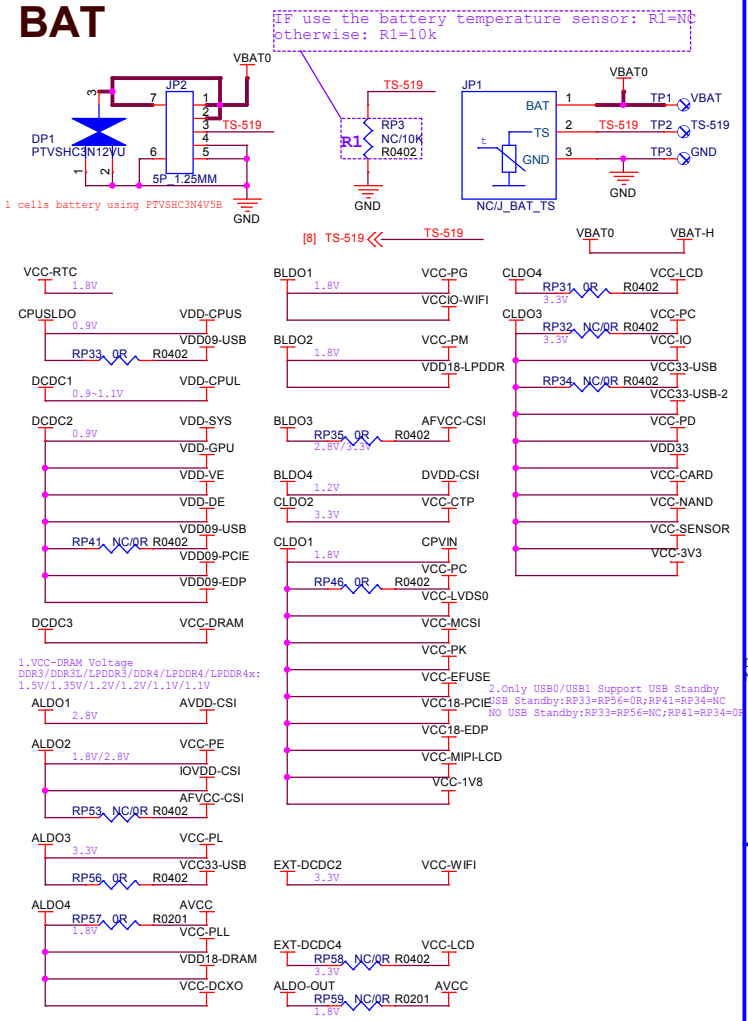

PMIC

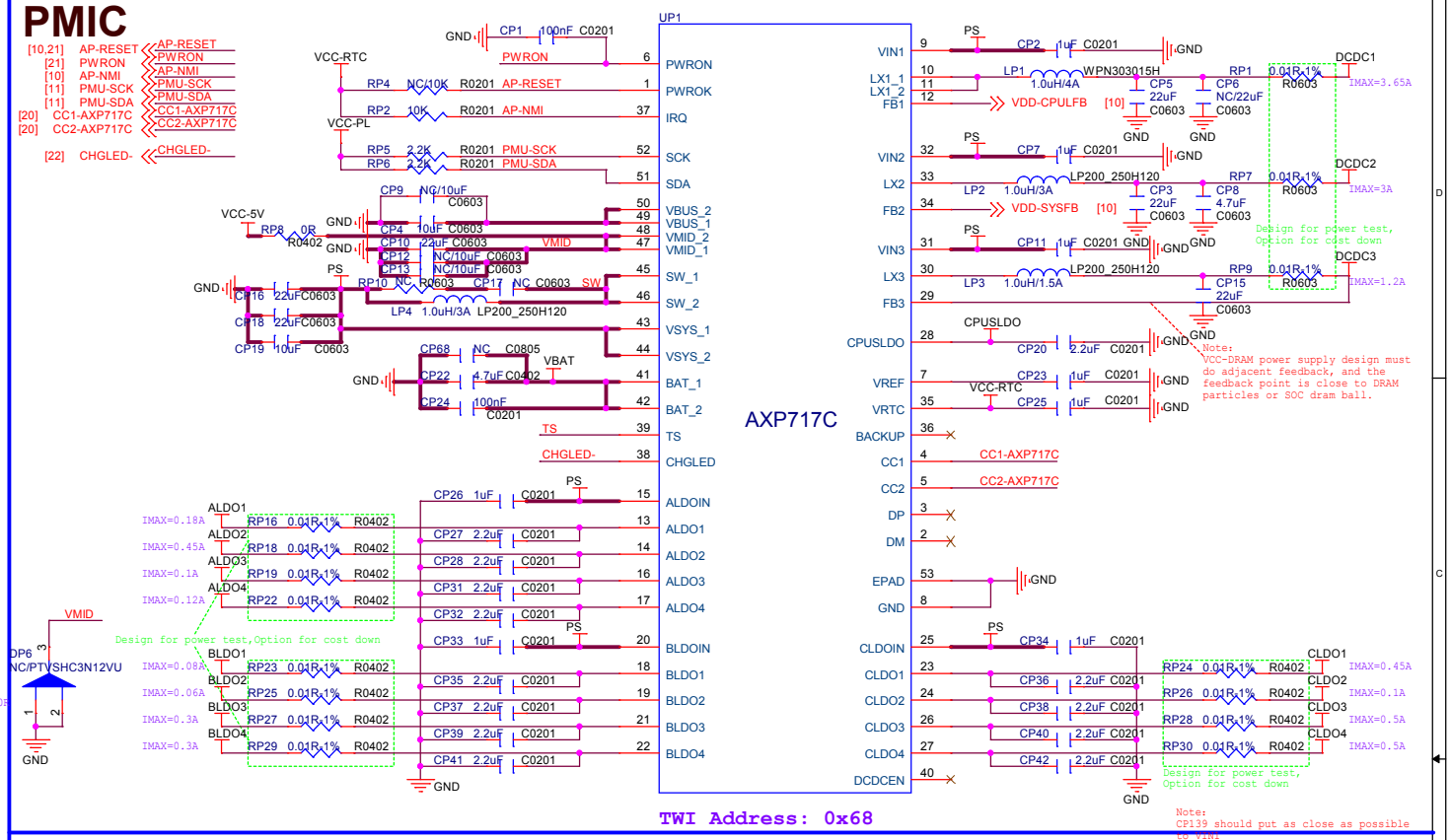

AXP323

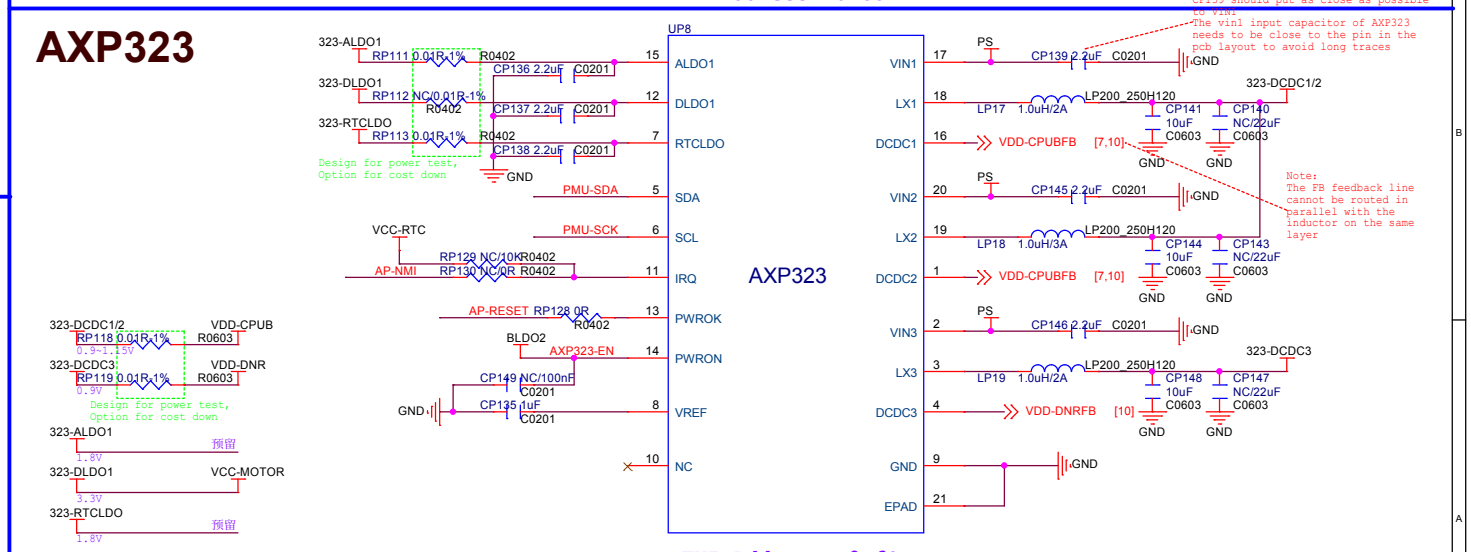

EXT DCDC

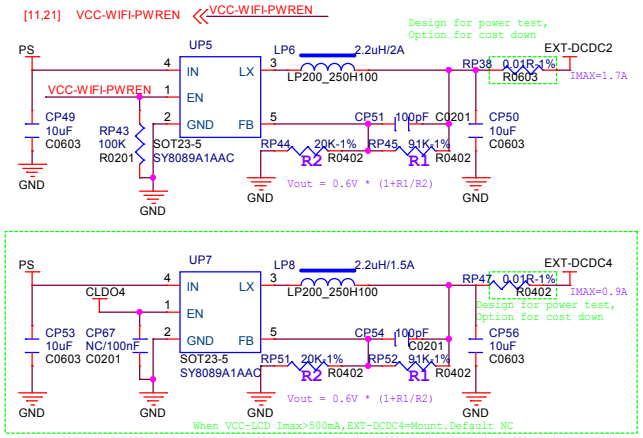

AllWinner Technology Co.,Ltd	
Design Name	A523-STD-AXP717C-AXP323-LPDDR4-4X
Size A3	Page Name 07 POWER-AXP717C+AXP323
Rev	
Date: Tuesday, June 18, 2024	Sheet 7 of 27

ACIN

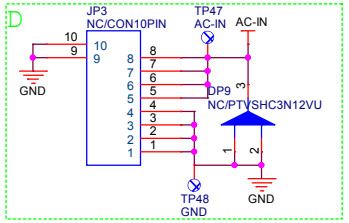

Default:
NOT ACIN and Solution 1,Support OVP

Circuit	ACIN	NOT ACIN,Support OVP
A	USE	NC
B	USE	NC
C	NC	USE
D	USE	NC

[11] USB-DRVVBUS — USB-DRVVBUS
[11,21] USB-VBUSDET — USB-VBUSDET
[11,21] ACIN-DET — ACIN-DET
[11,21] USB0-EN — USB0-EN
[11] OVP-INT — OVP-INT

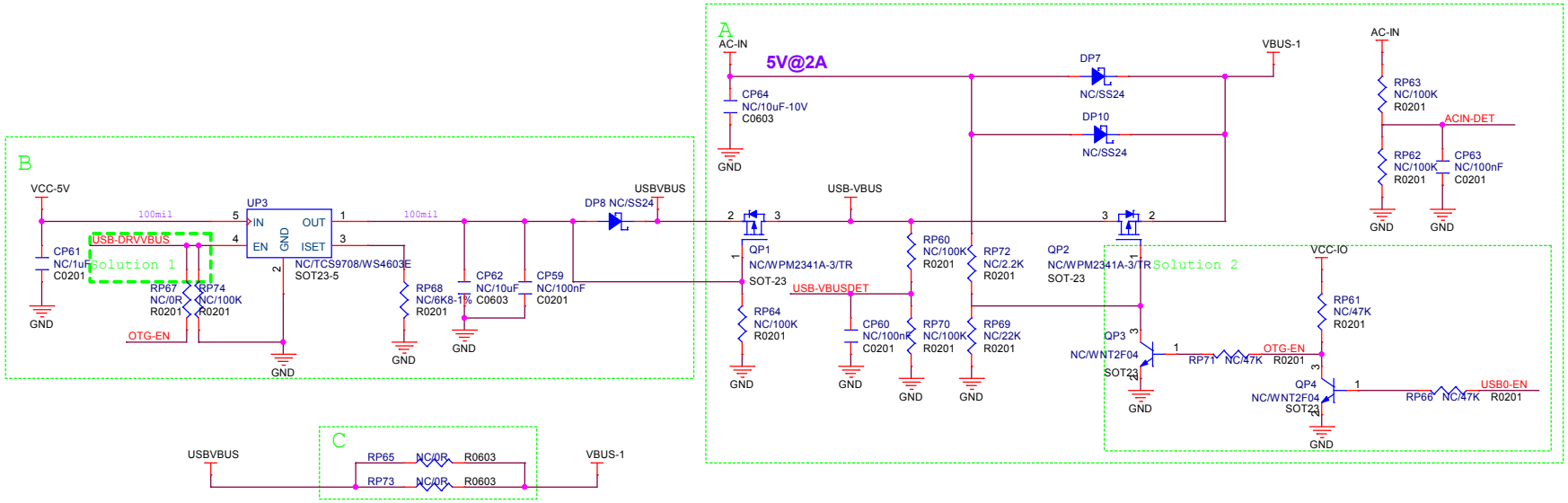

OVP

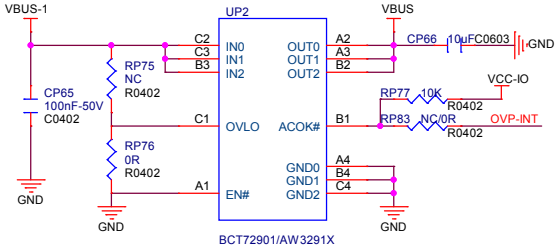

AllWinner Technology Co.,Ltd		
Design Name	A523-STD-AXP717C-AXP323-LPDDR4-4X	
Size A3	Page Name 08 POWER-ACIN	Rev
Date: Tuesday, June 11, 2024	Sheet 8 of 22	

LPDDR4-4X

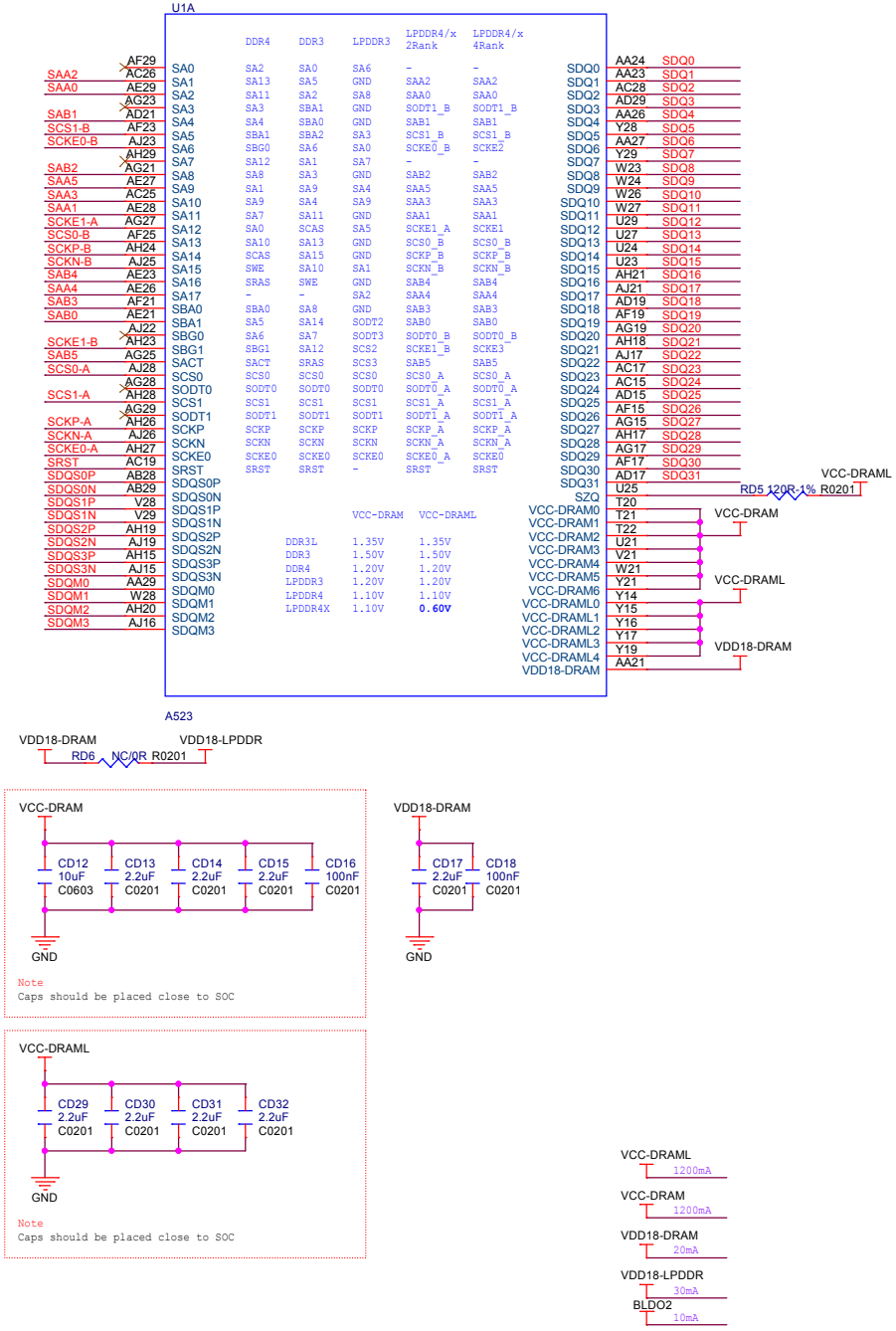

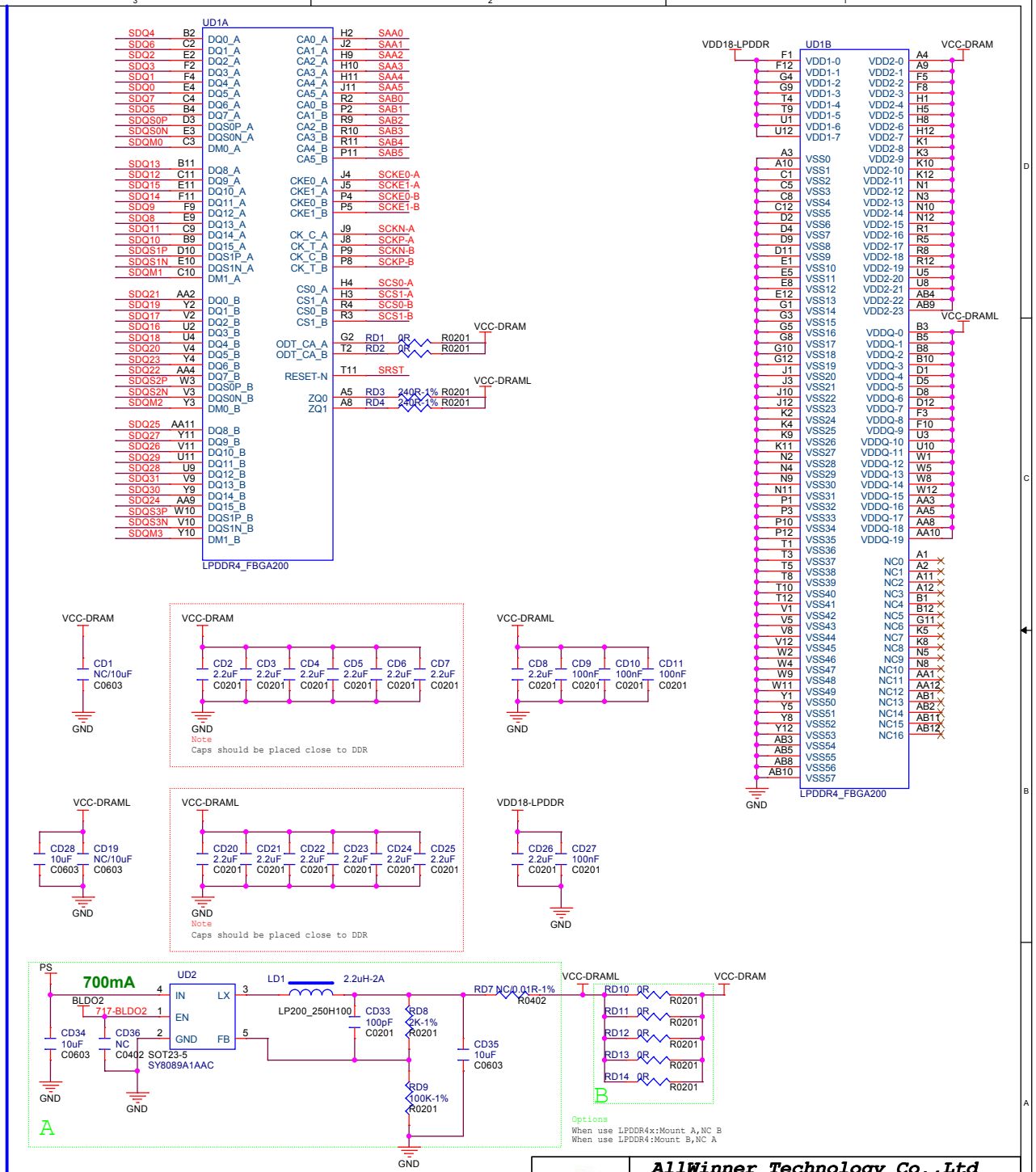

AllWinner Technology Co.,Ltd			
Design Name	A523-STD-AXP717C-AXP323-LPDDR4-4X		
Size A3	Page Name 09 A523 DDR		Rev
Date: Tuesday, June 11, 2024	Sheet 9 of 22		

SYS

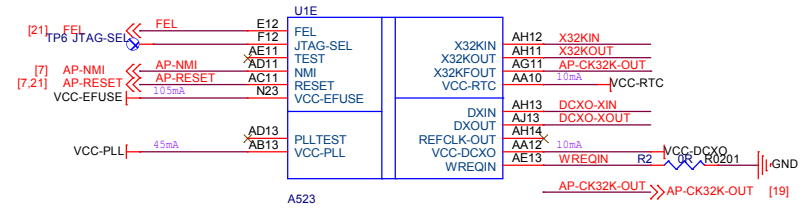

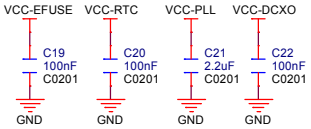

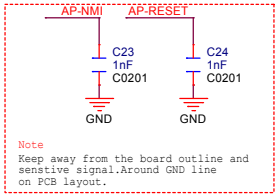

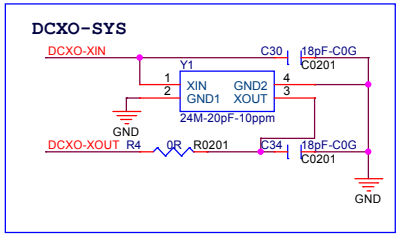

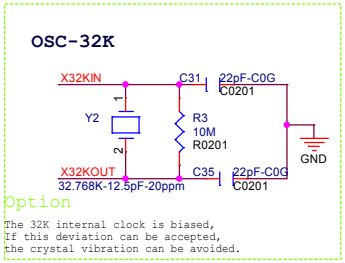

CORE POWER

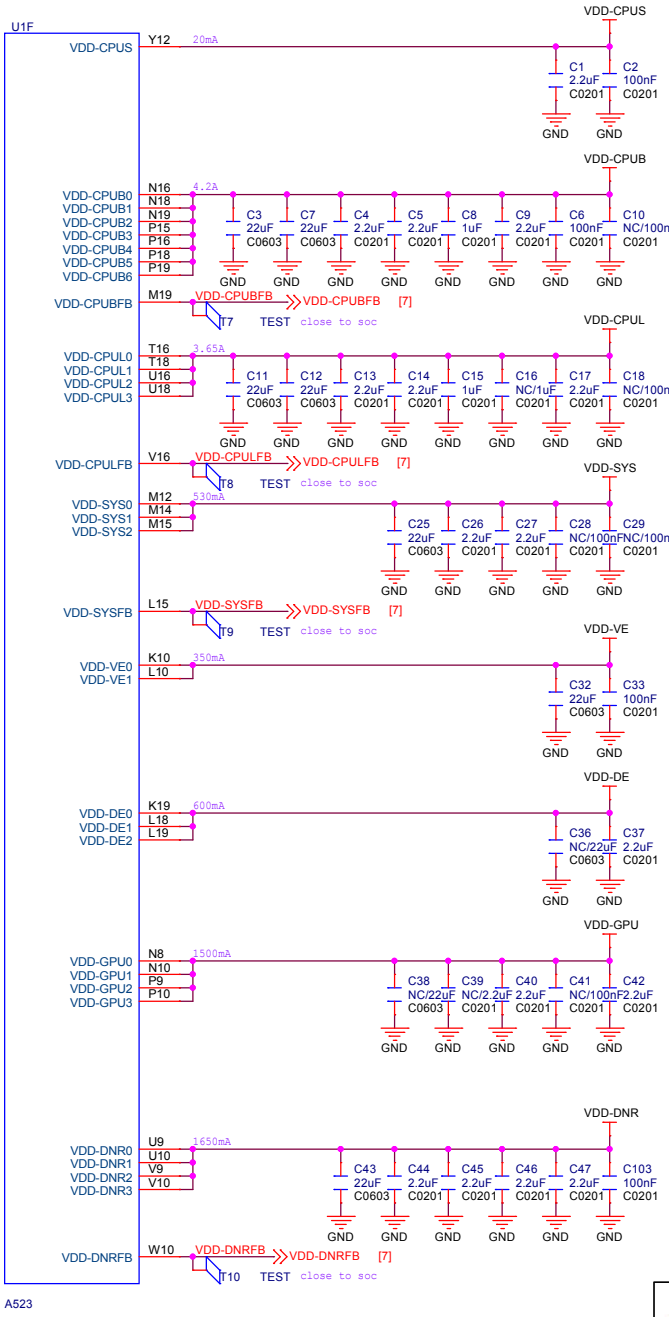

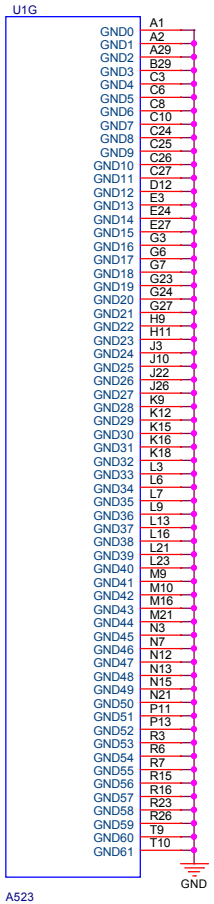

AllWinner Technology Co.,Ltd			
Design Name	A523-STD-AXP717C-AXP323-LPDDR4-4X		
Size A3	Page Name 10 A523 SYS		Rev
Date: Tuesday, June 11, 2024	Sheet 10 of 22		

GPIO

U1B

Signal	Pin	Net
PB0/UART2-TX/SPI2-CS0/JTAG-MS/LCD0-D0/PWM0-6/PB-EINT0	J24	CPUX-TMS
PB1/UART2-RX/SPI2-CLK/JTAG-CK/LCD0-D1/PWM0-7/PB-EINT1	J25	CPUX-TCK
PB2/UART2-RTS/SPI2-MOSI/JTAG-DO/LCD0-D8/PB-EINT2	H27	CPUX-TDO
PB3/UART2-CTS/SPI2-MISO/JTAG-DI/LCD0-D9/PB-EINT3	H28	CPUX-TDI
PB4/TWI1-SCK/I2S0-MCLK/TRACE-DATA2/PWM0-8/PB-EINT4	J27	I2S0-MCLK
PB5/TWI1-SDA/I2S0-BCLK/TRACE-CLK/PWM0-9/PB-EINT5	J28	I2S0-BCLK
PB6/I2S0-LRCK/TRACE-DATA0/PWM0-10/PB-EINT6	J29	I2S0-LRCK
PB7/OWA-IN/I2S0-DOUT0/I2S0-DIN1/LCD0-D16/PWM0-11/PB-EINT7	K27	
PB8/OWA-OUT/I2S0-DIN0/I2S0-DOUT1/LCD0-D17/PWM0-0/PB-EINT8	K28	I2S0-DIN
PB9/UART0-TX/TWI0-SCK/TRACE-DATA1/I2S0-DIN2/I2S0-DOUT2/PB-EINT9	L24	CPUX-TX
PB10/UART0-RX/TWI0-SDA/PWM0-1/I2S0-DIN3/I2S0-DOUT3/PB-EINT10	L25	CPUX-RX
PB11/TWI5-SCK/UART7-RTS/SPI1-CS0/PWM0-2/PB-EINT11	L26	
PB12/TWI5-SDA/UART7-CTS/SPI1-CLK/PWM0-3/PB-EINT12	L27	TWI5-SCK
PB13/TWI4-SCK/UART7-TX/SPI1-MOSI/PWM0-4/PB-EINT13	L28	TWI5-SDA
PB14/TWI4-SDA/UART7-RX/SPI1-MISO/PWM0-5/PB-EINT14	L29	

eDP IO: PB7 [15], PB13 [11], PB14 [11]

Signal	Pin	Net
PC0/NAND-WE/SDC2-DS/PC-EINT0	R24	eMMC-DS
PC1/NAND-ALE/SDC2-RST/PC-EINT1	T27	eMMC-RST
PC2/NAND-CLE/SPI0-MOSI/SPIF-MOSI/PC-EINT2	N26	
PC3/NAND-CE1/SPI0-CS0/SPIF-CS0/PC-EINT3	N25	
PC4/NAND-CE0/SPI0-MISO/SPIF-MISO/PC-EINT4	N24	
PC5/NAND-RE/SDC2-CLK/PC-EINT5	T28	eMMC-CLK (RM1 33R R0201)
PC6/NAND-RB0/SDC2-CMD/PC-EINT6	R29	eMMC-CMD
PC7/NAND-RB1/SPI0-CS1/SPIF-DQS/PC-EINT7	R25	
PC8/NAND-DQ7/SDC2-D3/SPIF-D7/PC-EINT8	R28	eMMC-D3
PC9/NAND-DQ6/SDC2-D4/SPIF-D6/PC-EINT9	R27	eMMC-D4
PC10/NAND-DQ5/SDC2-D0/SPIF-D5/PC-EINT10	P28	eMMC-D0
PC11/NAND-DQ4/SDC2-D5/SPIF-D4/PC-EINT11	P27	eMMC-D5
PC12/NAND-DQS/SPI0-CLK/SPIF-CLK/PC-EINT12	N29	
PC13/NAND-DQ3/SDC2-D1/PC-EINT13	N28	eMMC-D1
PC14/NAND-DQ2/SDC2-D6/PC-EINT14	N27	eMMC-D6
PC15/NAND-DQ1/SDC2-D2/SPI0-WP/SPIF-WP/PC-EINT15	M28	eMMC-D2
PC16/NAND-DQ0/SDC2-D7/SPI0-HOLD/SPIF-HOLD/PC-EINT16	M27	eMMC-D7
VCC-PC	N22	VCC-PC (60mA)

[13] eMMC-DS, eMMC-RST, eMMC-CLK, eMMC-CMD, eMMC-D[7..0]

Signal	Pin	Net
PD0/LCD0-D2/LVDS0-D0P/DSI0-D0P/PWM0-0/PD-EINT0	A24	
PD1/LCD0-D3/LVDS0-D0N/DSI0-D0N/PWM0-1/PD-EINT1	B24	
PD2/LCD0-D4/LVDS0-D1P/DSI0-D1P/PWM0-2/PD-EINT2	A25	
PD3/LCD0-D5/LVDS0-D1N/DSI0-D1N/PWM0-3/PD-EINT3	B25	
PD4/LCD0-D6/LVDS0-D2P/DSI0-CKP/PWM0-4/PD-EINT4	A26	
PD5/LCD0-D7/LVDS0-D2N/DSI0-CKN/PWM0-5/PD-EINT5	B26	
PD6/LCD0-D10/LVDS0-CKP/DSI0-D2P/PWM0-6/PD-EINT6	A27	
PD7/LCD0-D11/LVDS0-CKN/DSI0-D2N/PWM0-7/PD-EINT7	B27	
PD8/LCD0-D12/LVDS0-D3P/DSI0-D3P/PWM0-8/PD-EINT8	A28	
PD9/LCD0-D13/LVDS0-D3N/DSI0-D3N/PWM0-9/PD-EINT9	B28	
PD10/LCD0-D14/LVDS1-D0P/DSI1-D0P/PWM0-10/SPI1-CS0/DBI-CSX/PD-EINT10	C28	
PD11/LCD0-D15/LVDS1-D0N/DSI1-D0N/PWM0-11/SPI1-CLK/DBI-SCLK/PD-EINT11	C29	
PD12/LCD0-D18/LVDS1-D1P/DSI1-D1P/PWM0-12/SPI1-MOSI/DBI-SDO/PD-EINT12	D28	
PD13/LCD0-D19/LVDS1-D1N/DSI1-D1N/PWM0-13/SPI1-MISO/DBI-SDI/DBI-TE/DBI-DCX/PD-EINT13	D29	
PD14/LCD0-D20/LVDS1-D2P/DSI1-CKP/PWM0-14/UART3-TX/PD-EINT14	E28	
PD15/LCD0-D21/LVDS1-D2N/DSI1-CKN/PWM0-15/UART3-RX/PD-EINT15	E29	
PD16/LCD0-D22/LVDS1-CKP/DSI1-D2P/PWM1-0/UART3-RTS/PD-EINT16	E26	
PD17/LCD0-D23/LVDS1-CKN/DSI1-D2N/PWM1-1/UART3-CTS/PD-EINT17	E25	
PD18/LCD0-CLK/LVDS1-D3P/DSI1-D3P/PWM1-2/UART4-TX/PD-EINT18	F29	
PD19/LCD0-DE/LVDS1-D3N/DSI1-D3N/PWM1-3/UART4-RX/PD-EINT19	F28	
PD20/LCD0-HSYNC/PWM0-2/UART2-TX/UART7-RTS/UART4-RTS/PD-EINT20	G28	
PD21/LCD0-VSYNC/PWM0-3/UART2-RX/UART7-CTS/UART4-CTS/PD-EINT21	G29	
PD22/PWM0-1/SPI1-HOLD/DBI-DCX/DBI-WRX/UART2-RTS/UART7-TX/TWI0-SCK/PD-EINT22	G25	
PD23/PWM0-0/SPI1-WP/DBI-TE/UART2-CTS/UART7-RX/TWI0-SDA/PD-EINT23	G26	
VCC-PD	J23	VCC-PD (150mA)
VCC-LVDS0	K21	VCC-LVDS0 (60mA)

Note PD: The line sequence of LVDS and MIPI-DSI is inconsistent, as shown in the following table.

GPIO	LVDS Function	MIPI-DSI Function
PD0	LVDS0-D0P	DSI-D0P
PD1	LVDS0-D0N	DSI-D0N
PD2	LVDS0-D1P	DSI-D1P
PD3	LVDS0-D1N	DSI-D1N
PD4	LVDS0-D2P	**DSI-CKP**
PD5	LVDS0-D2N	**DSI-CKN**
PD6	**LVDS0-CKP**	DSI-D2P
PD7	**LVDS0-CKN**	DSI-D2N
PD8	LVDS0-D3P	DSI-D3P
PD9	LVDS0-D3N	DSI-D3N

[14] MIPI-DSI1-DP0, MIPI-DSI1-DN0, MIPI-DSI1-DP1, MIPI-DSI1-DN1, MIPI-DSI1-CKP, MIPI-DSI1-CKN, MIPI-DSI1-DP2, MIPI-DSI1-DN2, MIPI-DSI1-DP3, MIPI-DSI1-DN3

[14] LCD-RST, [14] LCD-PWM

Signal	Pin	Net
PE0/MCSI0-MCLK/PE-EINT0	J1	
PE1/TWI2-SCK/UART4-TX/PE-EINT1	J2	GPS-TX [24,26]
PE2/TWI2-SDA/UART4-RX/PE-EINT2	K2	GPS-RX [24,26]
PE3/TWI3-SCK/UART4-RTS/PE-EINT3	K1	GPS-PWR [24,26]
PE4/TWI3-SDA/UART4-CTS/PE-EINT4	L1	GPS-RESET [24,26]
PE5/MCSI1-MCLK/PLL-LOCK-DBG/I2S2-MCLK/LEDC/PE-EINT5	L2	
PE6/I2S2-BCLK/LCD0-TRIG/NCSI-D8/PE-EINT6	M1	MCSI-STBY-F [16]
PE7/I2S2-LRCK/LCD1-TRIG/NCSI-D9/PE-EINT7	M2	MCSI-RST-F [16]
PE8/I2S2-DOUT0/NCSI-D10/PE-EINT8	J4	MCSI-STBY-R [16]
PE9/I2S2-DIN0/NCSI-D11/PE-EINT9	J5	MCSI-RST-R [16]
PE10/MCSI3-MCLK/PWM0-3/NCSI-D12/PE-EINT10	N1	
PE11/TWI1-SCK/UART5-RTS/SPI2-CS0/UART6-TX/NCSI-D13/PE-EINT11	N2	
PE12/TWI1-SDA/UART5-CTS/SPI2-CLK/UART6-RX/NCSI-D14/PE-EINT12	L4	
PE13/TWI4-SCK/UART5-TX/SPI2-MOSI/UART6-RTS/CSI0-XVS-FSYNC/PE-EINT13	L5	MCSI-SCK [16]
PE14/TWI4-SDA/UART5-RX/SPI2-MISO/UART6-CTS/CSI1-XVS-FSYNC/PE-EINT14	N4	MCSI-SDA [16]
PE15/MCSI2-MCLK/PWM0-2/NCSI-D15/PE-EINT15	N5	MCSI-MCLK [16] (RV1 33R R0201)
VCC-PE	J6	VCC-PE (60mA)

Signal	Pin	Net
PF0/SDC0-D1/JTAG-MS/TRACE-DATA2/I2S3-DIN0/I2S3-DOUT1/PF-EINT0	C13	SDC0-D1 [20]
PF1/SDC0-D0/JTAG-DI/TRACE-DATA1/I2S3-DOUT0/I2S3-DIN1/PF-EINT1	B13	SDC0-D0 [20]
PF2/SDC0-CLK/UART0-TX/I2S3-DIN2/I2S3-DOUT2/PF-EINT2	B12	SDC0-CLK [20] (RC1 33R R0201)
PF3/SDC0-CMD/JTAG-DO/TRACE-DATA0/I2S3-LRCK/PF-EINT3	A12	SDC0-CMD [20]
PF4/SDC0-D3/UART0-RX/I2S3-DIN3/I2S3-DOUT3/PF-EINT4	C11	SDC0-D3 [20]
PF5/SDC0-D2/JTAG-CK/TRACE-CLK/I2S3-BCLK/PF-EINT5	B11	SDC0-D2 [20]
PF6/I2S3-MCLK/PF-EINT6	C12	SDC0-DET [20]

Signal	Pin	Net
PG0/SDC1-CLK/PG-EINT0	R1	RW1 33R R0201
PG1/SDC1-CMD/PG-EINT1	R2	WL-SDIO-CLK [19]
PG2/SDC1-D0/PCIE0-PERSTN/PG-EINT2	P3	WL-SDIO-CMD [19]
PG3/SDC1-D1/PCIE0-WAKEN/PG-EINT3	P2	WL-SDIO-D0 [19]
PG4/SDC1-D2/PCIE0-CLKREQN/PG-EINT4	T3	WL-SDIO-D1 [19]
PG5/SDC1-D3/PG-EINT5	T2	WL-SDIO-D2 [19]
PG6/UART1-TX/PG-EINT6	R5	WL-SDIO-D3 [19]
PG7/UART1-RX/PG-EINT7	U3	BT-UART-RX [19]
PG8/UART1-RTS/PG-EINT8	R4	BT-UART-TX [19]
PG9/UART1-CTS/PG-EINT9	U4	BT-UART-CTS [19]
PG10/I2S1-MCLK/PG-EINT10	U1	BT-UART-RTS [19]
PG11/I2S1-BCLK/PG-EINT11	U2	
PG12/I2S1-LRCK/PG-EINT12	V2	BT-PCM-CLK [19]
PG13/I2S1-DOUT0/I2S1-DIN1/PG-EINT13	V3	BT-PCM-SYNC [19]
PG14/I2S1-DIN0/I2S1-DOUT1/PG-EINT14	U5	BT-PCM-DIN [19]
VCC-PG	N6	BT-PCM-DOUT [19] (70mA)

Serial port data signal needs to be reversed.

Signal	Pin	Net
PH0/TWI0-SCK/RGMII0-RXD1/RMII0-RXD1/PH-EINT0	F10	CTP-SCK
PH1/TWI0-SDA/RGMII0-RXD0/RMII0-RXD0/PH-EINT1	E10	CTP-SDA
PH2/TWI1-SCK/I2S2-DIN3/RGMII0-RXCTL/RMII0-CRS-DV/I2S2-DOUT3/PH-EINT2	D10	SENSOR-TWI-SCK
PH3/TWI1-SDA/IR-TX/I2S2-DIN2/RGMII0-CLKIN/RMII0-RXER/I2S2-DOUT2/PH-EINT3	B10	SENSOR-TWI-SDA
PH4/UART3-TX/SPI1-CS0/RGMII0-TXD1/RMII0-TXD1/PH-EINT4	A10	TWI0-SCK [14,15]
PH5/UART3-RX/SPI1-CLK/LEDC/RGMII0-TXD0/RMII0-TXD0/PH-EINT5	B9	TWI0-SDA [14,15]
PH6/UART3-RTS/SPI1-MOSI/OWA-IN/RGMII0-TXCK/RMII0-TXCK/PH-EINT6	C9	TWI1-SCK [22]
PH7/UART3-CTS/SPI1-MISO/OWA-OUT/RGMII0-TXCTL/RMII0-TXEN/PH-EINT7	F8	TWI1-SDA [22]
PH8/DMIC-CLK/SPI2-CS0/I2S2-MCLK/I2S2-DIN2/PH-EINT8	E8	PS-EINT [22]
PH9/DMIC-DATA0/SPI2-CLK/I2S2-BCLK/RGMII0-MDC/PH-EINT9	D8	OVP-INT [8]
PH10/DMIC-DATA1/SPI2-MOSI/I2S2-LRCK/RGMII0-MDIO/PH-EINT10	B8	PA-SHDN [17]
PH11/DMIC-DATA2/SPI2-MISO/I2S2-DOUT0/I2S2-DIN1/PCIE0-PERSTN/PH-EINT11	A8	GMA340-SEL [20]
PH12/DMIC-DATA3/TWI3-SCK/I2S2-DIN0/I2S2-DOUT1/PCIE0-WAKEN/PH-EINT12	C7	GMA340-OE [20]
PH13/TWI3-SDA/I2S3-MCLK/RGMII0-EPHY-25M/PH-EINT13	B7	CTP-INT [14,15]
PH14/I2S3-BCLK/RGMII0-RXD3/RMII0-NULL/PH-EINT14	A6	CTP-RST [14,15]
PH15/I2S3-LRCK/RGMII0-RXD2/RMII0-NULL/PH-EINT15	B6	GS-INT [22]
PH16/I2S3-DOUT0/I2S3-DIN1/RGMII0-RXCK/RMII0-NULL/CLK-FANOUT0/PH-EINT16	A5	SDC0-PWN [20]
PH17/I2S3-DOUT1/I2S3-DIN0/RGMII0-TXD3/RMII0-NULL/PH-EINT17	B5	DDR-PARA-SEL-GPIO1 [12]
PH18/IR-TX/I2S3-DOUT2/I2S3-DIN2/RGMII0-TXD2/RMII0-NULL/PH-EINT18	D6	DDR-PARA-SEL-GPIO0 [12]
PH19/IR-RX/I2S3-DOUT3/I2S3-DIN3/LEDC/PCIE0-CLKREQN/PH-EINT19	E6	LCD-BL-EN [14]
VCC-IO	J12	VCC-IO (30mA)

Audio Switch/RGMII IO: PH0 [14,15], PH1 [14,15], PH2 [14,15], PH3 [14,15], PH4 [14,15], PH5 [14,15], PH6 [14,15], PH7 [14,15], PH8 [14,15], PH9 [14,15], PH10 [14,15], PH11 [14,15], PH12 [14,15], PH13 [14,15], PH14 [14,15], PH15 [14,15], PH16 [14,15], PH17 [14,15], PH18 [14,15], PH19 [14,15]

Signal	Pin	Net
PK0/MCSIA-D0N/PK-EINT0	A4	MCSIA-D0N [16]
PK1/MCSIA-D0P/PK-EINT1	B4	MCSIA-D0P [16]
PK2/MCSIA-D1N/PK-EINT2	A3	MCSIA-D1N [16]
PK3/MCSIA-D1P/PK-EINT3	B3	MCSIA-D1P [16]
PK4/MCSIA-CKN/TWI2-SCK/PK-EINT4	B2	MCSIA-CKN [16]
PK5/MCSIA-CKP/TWI2-SDA/PK-EINT5	B1	MCSIA-CKP [16]
PK6/MCSIB-D0N/PK-EINT6	C5	MCSIB-D0N [16]
PK7/MCSIB-D0P/PK-EINT7	C4	MCSIB-D0P [16]
PK8/MCSIB-D1N/PK-EINT8	E5	MCSIB-D1N [16]
PK9/MCSIB-D1P/PK-EINT9	E4	MCSIB-D1P [16]
PK10/MCSIB-CKN/TWI3-SCK/PK-EINT10	G5	
PK11/MCSIB-CKP/TWI3-SDA/PK-EINT11	G4	
PK12/MCSIC-D0N/UART7-TX/TWI4-SCK/NCSI-PCLK/PK-EINT12	C2	
PK13/MCSIC-D0P/UART7-RX/TWI4-SDA/NCSI-MCLK/PK-EINT13	C1	MCSIC-D0N [16]
PK14/MCSIC-D1N/UART7-RTS/UART5-RTS/NCSI-HSYNC/PK-EINT14	D2	MCSIC-D0P [16]
PK15/MCSIC-D1P/UART7-CTS/UART5-CTS/NCSI-VSYNC/PK-EINT15	D1	MCSIC-D1N [16]
PK16/MCSIC-CKN/TWI5-SCK/UART5-TX/NCSI-D0/PK-EINT16	E2	MCSIC-D1P [16]
PK17/MCSIC-CKP/TWI5-SDA/UART5-RX/NCSI-D1/PK-EINT17	E1	MCSIC-CKN [16]
PK18/MCSID-D0N/MCSI0-MCLK/UART6-TX/NCSI-D2/PK-EINT18	F1	MCSIC-CKP [16]
PK19/MCSID-D0P/TWI2-SCK/UART6-RX/NCSI-D3/PK-EINT19	F2	
PK20/MCSID-D1N/TWI2-SDA/UART6-RTS/NCSI-D4/PK-EINT20	G2	
PK21/MCSID-D1P/MCSI1-MCLK/UART6-CTS/NCSI-D5/PK-EINT21	G1	
PK22/MCSID-CKN/TWI3-SCK/PWM0-6/NCSI-D6/PK-EINT22	H2	
PK23/MCSID-CKP/TWI3-SDA/PWM0-7/NCSI-D7/PK-EINT23	H1	
VCC-PK	J7	VCC-PK (90mA)
VCC-MCSI	H10	VCC-MCSI (25mA)

The internal VCC18-PF of SOC is powered by VCC-MCSI, so for products with TF card, VCC-MCSI must maintain power supply.

Signal	Pin	Net
PL0/S-TWI0-SCK/S-PL-EINT0	AJ7	
PL1/S-TWI0-SDA/S-PL-EINT1	AH7	PMU-SCK [7]
PL2/S-UART0-TX/S-UART1-TX/MCU-PWM0-0/S-PL-EINT2	AJ8	PMU-SDA [7]
PL3/S-UART0-RX/S-UART1-RX/MCU-PWM0-1/S-PL-EINT3	AH8	CPUS-TX USB-VBUSDET [8,21]
PL4/S-JTAG-MS/MCU-PWM0-2/I2S0-BCLK/S-PL-EINT4	AH9	CPUS-RX ACIN-DET [8,21]
PL5/S-JTAG-CK/MCU-PWM0-3/I2S0-LRCK/DMIC-DATA3/S-PL-EINT5	AJ9	CPUS-TMS USB0-EN [8,21]
PL6/S-JTAG-DO/MCU-PWM0-4/I2S0-DIN1/I2S0-DOUT0/DMIC-DATA2/S-PL-EINT6	AE9	CPUS-TCK GYRO-INT1 [21,22]
PL7/S-JTAG-DI/MCU-PWM0-5/I2S0-DOUT1/I2S0-DIN0/DMIC-DATA1/S-PL-EINT7	AF9	CPUS-TDO GYRO-INT2 [21,22]
PL8/S-TWI1-SCK/S-RJTAG-MS/I2S0-MCLK/DMIC-DATA0/S-PL-EINT8	AG10	CPUS-TDI VCC-WIFI-PWREN [7,21]
PL9/S-TWI1-SDA/S-RJTAG-CK/S-PWM0-1/DMIC-CLK/S-PL-EINT9	AG9	USB1-DRVVBUS [20]
PL10/S-PWM0-0/S-RJTAG-DO/DMIC-DATA0/S-SPI0-CS0/S-PL-EINT10	AC9	EINT-HAL [22]
PL11/S-IR-RX/S-RJTAG-DI/DMIC-DATA1/S-SPI0-CLK/S-PL-EINT11	AD9	KD-EINT [20]
PL12/S-TWI2-SCK/MCU-PWM0-6/S-UART0-TX/DMIC-DATA2/S-SPI0-MOSI/S-PL-EINT12	AF7	LED-EN [16]
PL13/S-TWI2-SDA/MCU-PWM0-7/S-UART0-RX/DMIC-DATA3/S-SPI0-MISO/S-PL-EINT13	AE7	USB-DRVVBUS [8]
VCC-PL	AA9	CC-INT [20] (50mA) VCC-PL

QUICK CHARGE: PL4 [14,15], PL5 [14,15], PL6 [14,15]

DMIC IO: PL9 [14,15], PL10 [14,15], PL11 [14,15], PL12 [14,15]

Signal	Pin	Net
PM0/S-UART0-TX/S-UART1-TX/MCU-PWM0-0/S-PM-EINT0	AJ4	
PM1/S-UART0-RX/S-UART1-RX/MCU-PWM0-1/S-PM-EINT1	AJ3	WL-WAKE-AP [19]
PM2/S-TWI1-SCK/S-RJTAG-MS/MCU-PWM0-4/S-PM-EINT2	AH5	WL-REG-ON [19]
PM3/S-TWI1-SDA/S-RJTAG-CK/MCU-PWM0-5/S-PM-EINT3	AH4	BT-RESETN [19]
PM4/MCU-PWM0-6/S-RJTAG-DO/S-TWI2-SCK/S-PM-EINT4	AJ5	AP-WAKE-BT [19]
PM5/S-IR-RX/S-RJTAG-DI/S-TWI2-SDA/MCU-PWM0-7/S-PM-EINT5	AH6	BT-WAKE-AP [19]
VCC-PM	AC7	VCC-PM (25mA)

A523

Net	Capacitor	Value	Package
VCC-PC	C48	100nF	C0201
VCC-PD	C49	10uF	C0603
VCC-PD	C50	100nF	C0201
VCC-LVDS0	C51	100nF	C0201
VCC-PE	C52	100nF	C0201
VCC-PG	C54	100nF	C0201
VCC-IO	C55	1uF	C0201
VCC-IO	C56	100nF	C0201
VCC-PK	C57	100nF	C0201
VCC-MCSI	C58	100nF	C0201
VCC-PL	C59	100nF	C0201
VCC-PM	C60	100nF	C0201

GND

GPIO use gide:
1.Note that the voltage of SOC GPIO must matches the external IO voltage.
2.The pull up voltage of the GPIO is selected to correspond to the power field voltage of GPIO.
3.Power current is PCB layout reference minimum.

AllWinner Technology Co.,Ltd	
Design Name	A523-STD-AXP717C-AXP323-LPDDR4-4X
Size A3	Page Name 11 A523 GPIO
Rev	
Date: Wednesday, June 12, 2024	Sheet 11 of 22

Audio&ADC

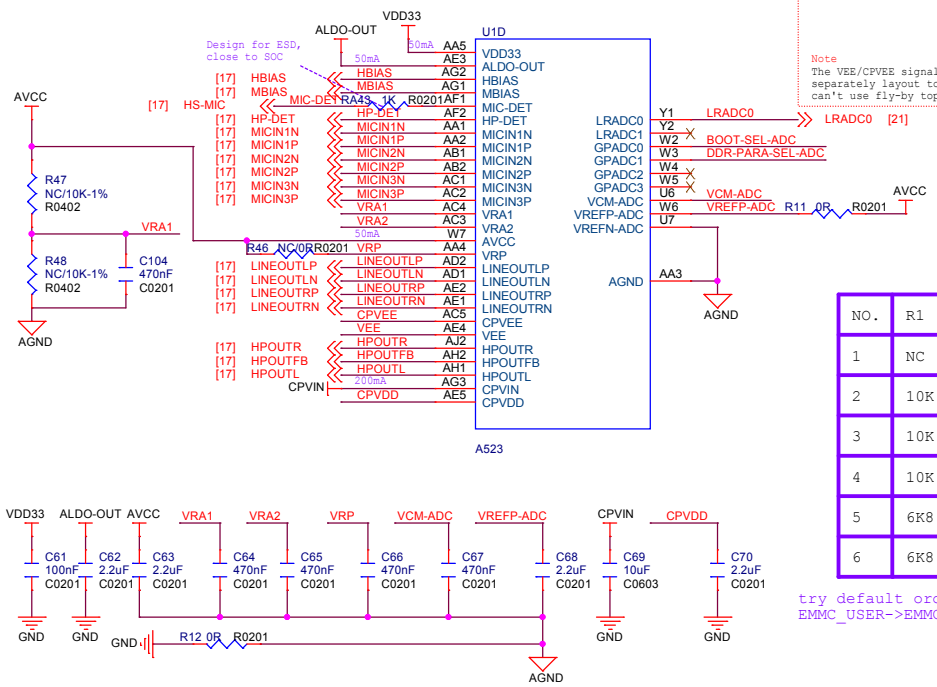

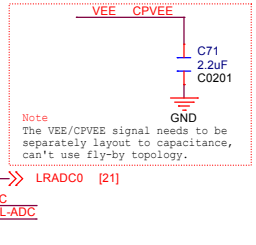

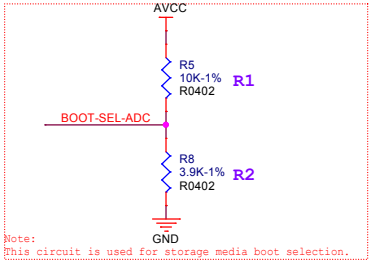

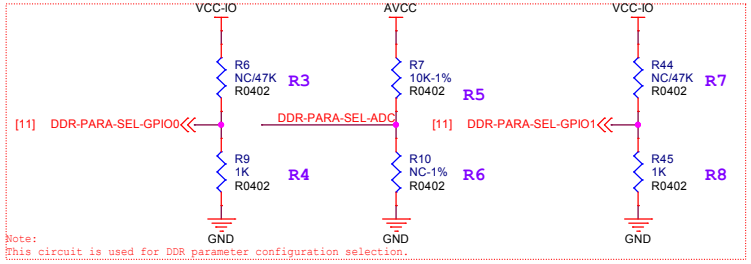

NO.	R1	R2	Boot Select type
1	NC	10K	SMHC0->MLC NAND->SLC NAND->try
2	10K	1K	SMHC0->SLC NAND->MLC NAND->try
3	10K	2K2	SMHC0->EMMC_USER->EMMC_BOOT->try
4	10K	3K9	SMHC0->EMMC_BOOT->EMMC_USER->try
5	6K8	4K7	SMHC0->SPI NOR->try
6	6K8	6K8	SMHC0->SPI NAND->try

try default order:(selected fail media will not try)
EMMC_USER->EMMC_BOOT->SLC NAND->MLC NAND->SPI NOR->SPI NAND

GPIO Level(Set by the R7 pull-up and R8 pull-down resistance of PH16 GPIO)	GPIO Level(Set by the R3 pull-up and R4 pull-down resistance of PH17 GPIO)	GPADC Voltage(Fixed pull-up R5 is 10K-1%,Set the voltage by adjusting pull-down resistor R6)	DDR PARA
0	0	163mV(1K-1%)	DDR PARA 0
0	0	382mV(2.7K-1%)	DDR PARA 1
0	0	608mV(5.1K-1%)	DDR PARA 2
0	0	811mV(8.2K-1%)	DDR PARA 3
0	0	1050mV(14K-1%)	DDR PARA 4
0	0	1315mV(27K-1%)	DDR PARA 5
0	0	1569mV(68K-1%)	DDR PARA 6
0	0	1800mV(NC)	DDR PARA 7
0	1	163mV(1K-1%)	DDR PARA 8
0	1	382mV(2.7K-1%)	DDR PARA 9
0	1	608mV(5.1K-1%)	DDR PARA 10
0	1	811mV(8.2K-1%)	DDR PARA 11
0	1	1050mV(14K-1%)	DDR PARA 12
0	1	1315mV(27K-1%)	DDR PARA 13
0	1	1569mV(68K-1%)	DDR PARA 14
0	1	1800mV(NC)	DDR PARA 15
1	0	163mV(1K-1%)	DDR PARA 16
1	0	382mV(2.7K-1%)	DDR PARA 17
1	0	608mV(5.1K-1%)	DDR PARA 18
1	0	811mV(8.2K-1%)	DDR PARA 19
1	0	1050mV(14K-1%)	DDR PARA 20
1	0	1315mV(27K-1%)	DDR PARA 21
1	0	1569mV(68K-1%)	DDR PARA 22
1	0	1800mV(NC)	DDR PARA 23
1	1	163mV(1K-1%)	DDR PARA 24
1	1	382mV(2.7K-1%)	DDR PARA 25
1	1	608mV(5.1K-1%)	DDR PARA 26
1	1	811mV(8.2K-1%)	DDR PARA 27
1	1	1050mV(14K-1%)	DDR PARA 28
1	1	1315mV(27K-1%)	DDR PARA 29
1	1	1569mV(68K-1%)	DDR PARA 30
1	1	1800mV(NC)	DDR PARA 31

USB&EDP&PCIE

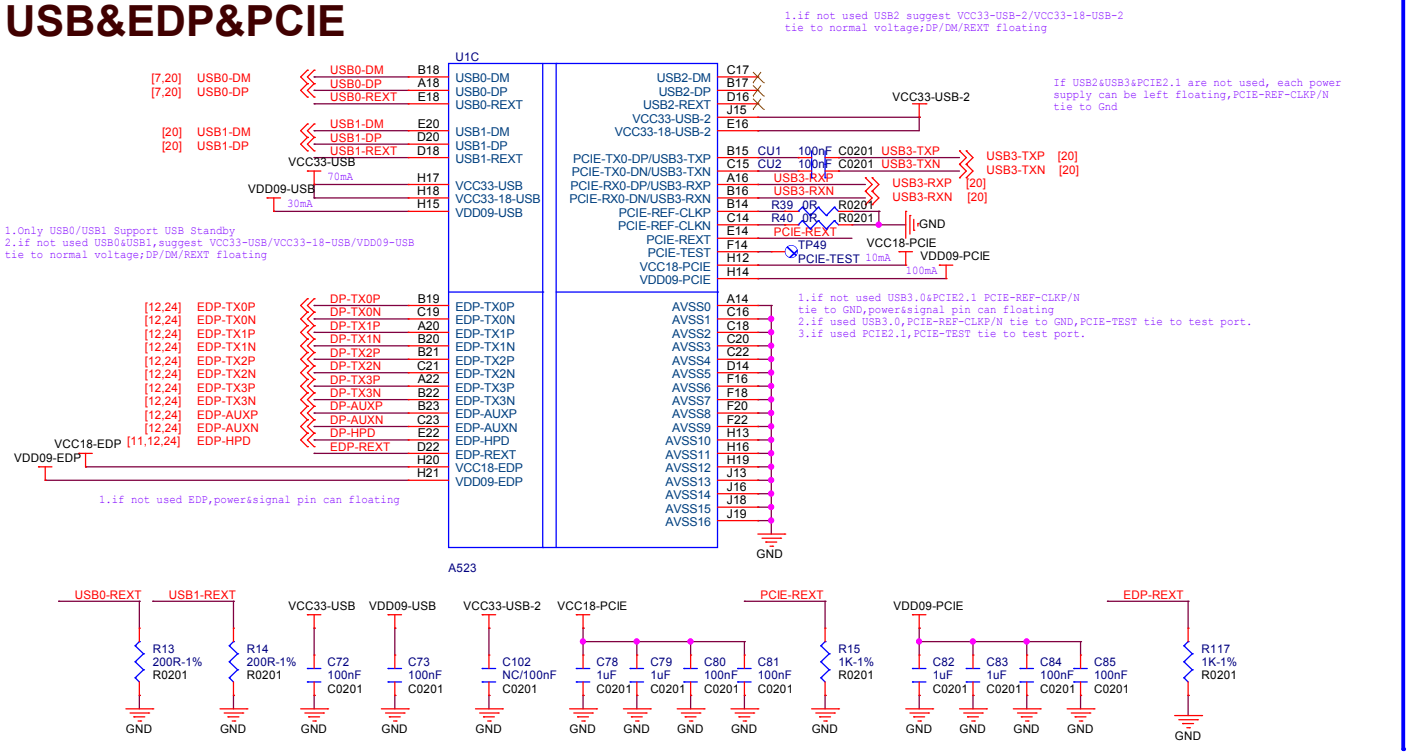

EMMC

Default:use EMMC

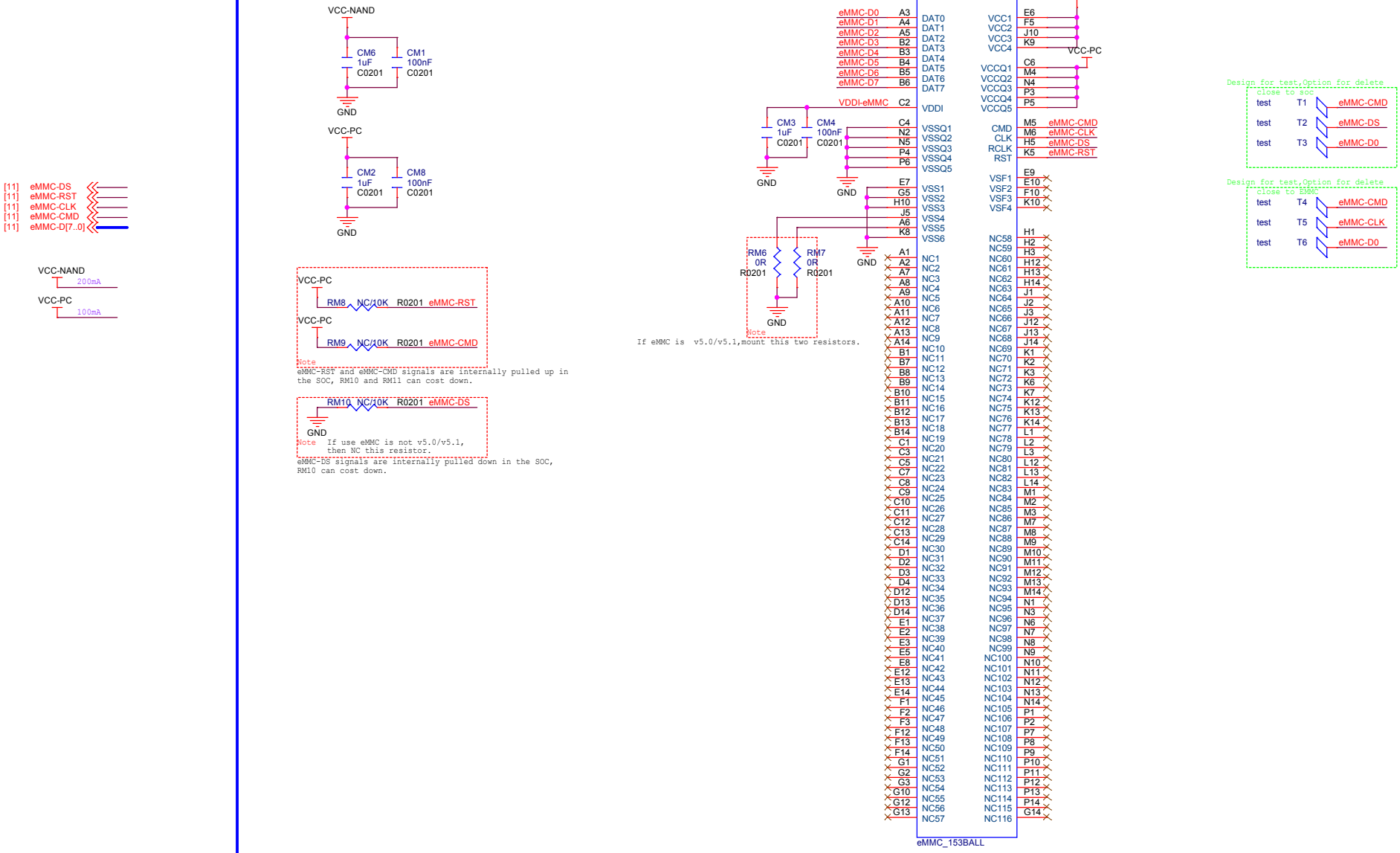

AllWinner Technology Co.,Ltd		
Design Name: A523-STD-AXP717C-AXP323-LPDDR4-4X		
Size: A3	Page Name: 13 EMMC	Rev
Date: Tuesday, June 11, 2024	Sheet 13 of 22	

LCD

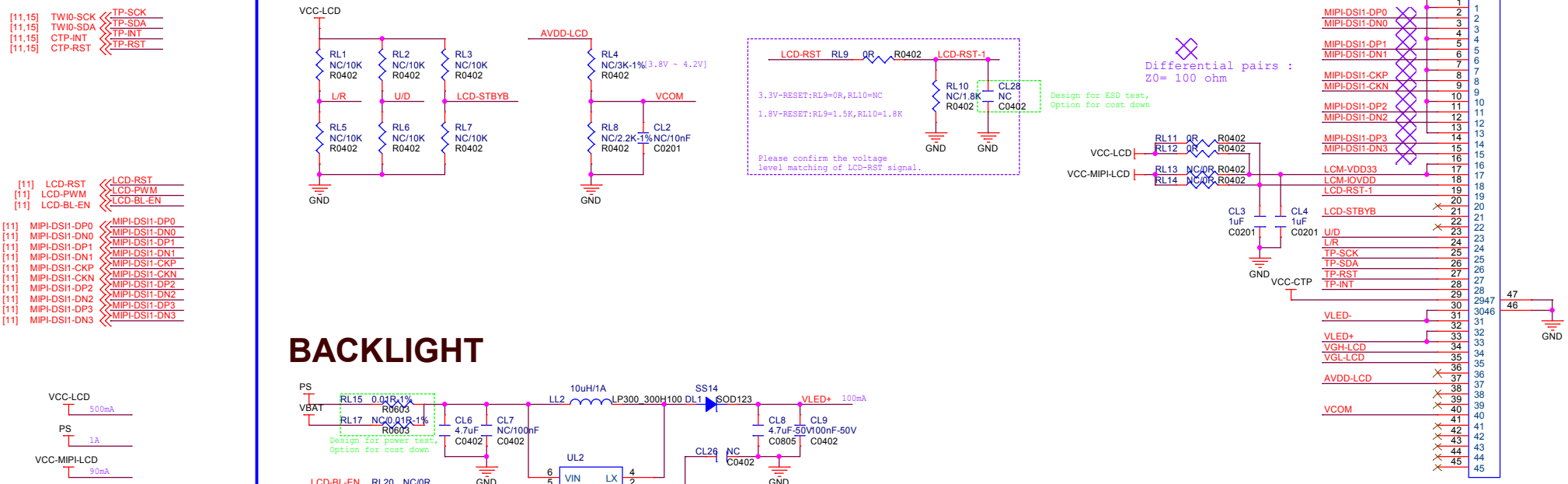

BACKLIGHT

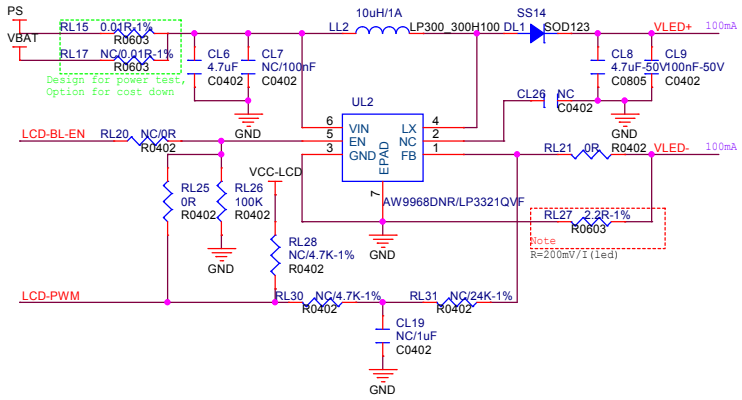

Default: SQ101D-Q5DI404-84H501(1200*1920)
Compatible 800*1280
设计软排线转接和兼容

LCD POWER For 800*1280

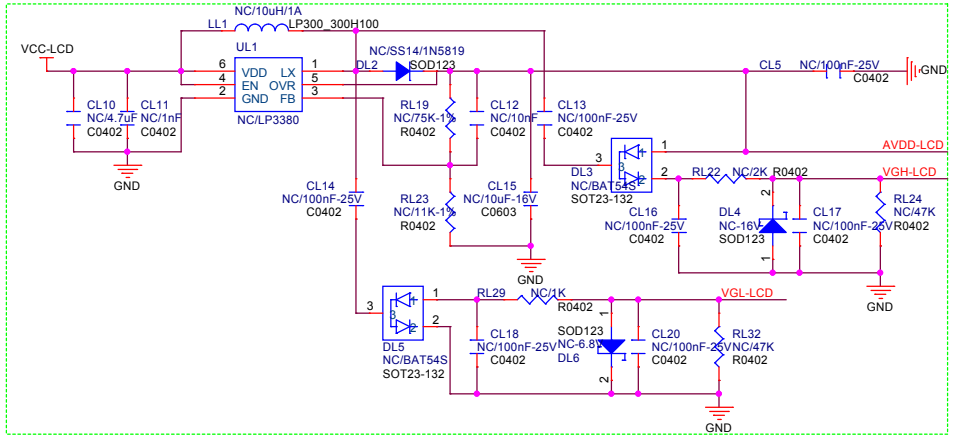

AllWinner Technology Co.,Ltd		
Design Name: A523-STD-AXP717C-AXP323-LPDDR4-4X		
Size: A3	Page Name: 14 MIPI LCM	Rev
Date: Tuesday, June 11, 2024	Sheet 14 of 22	

EDP LCM

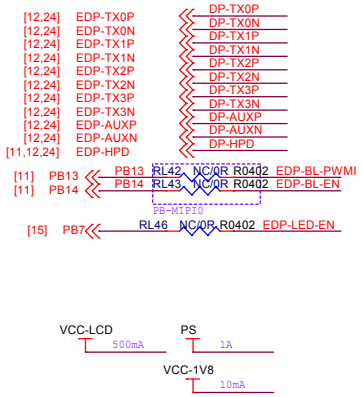

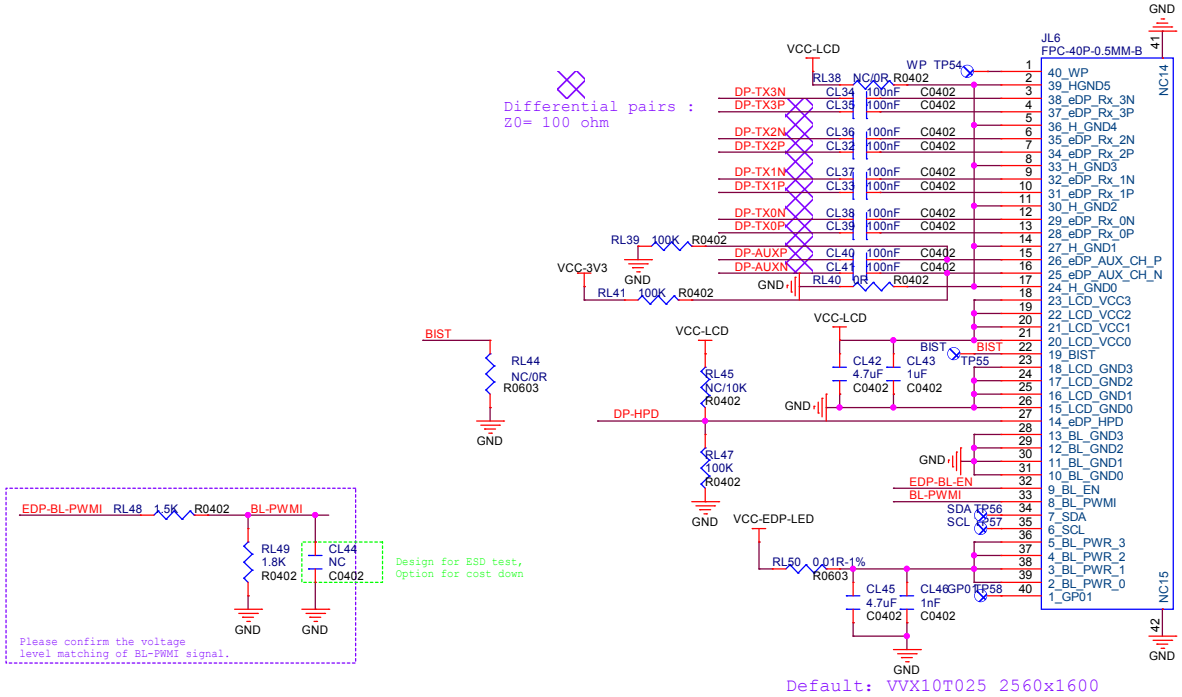

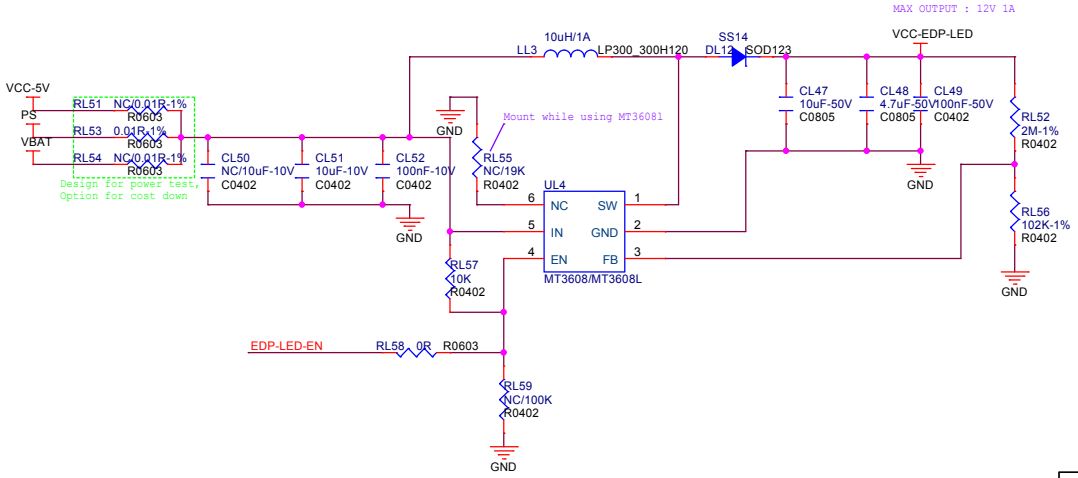

AllWinner Technology Co.,Ltd		
Design Name	A523-STD-AXP717C-AXP323-LPDDR4-4X	
Size A3	Page Name 14 EDP LCM 4LANE	Rev
Date: Tuesday, June 11, 2024	Sheet 14 of 27	

CTP

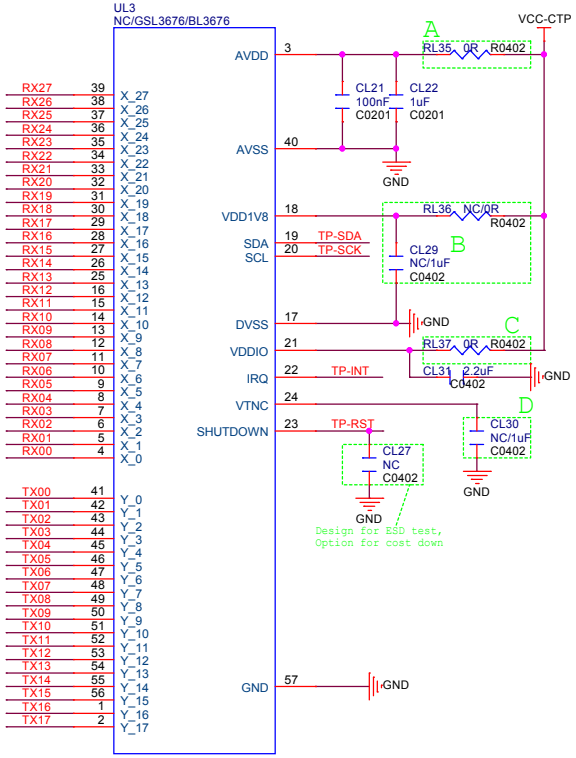

Default: GSL3676

Circuit	GSL3676	BL3676
A	0R	NC
B	NC	Mount
C	0R	NC
D	NC	1uF

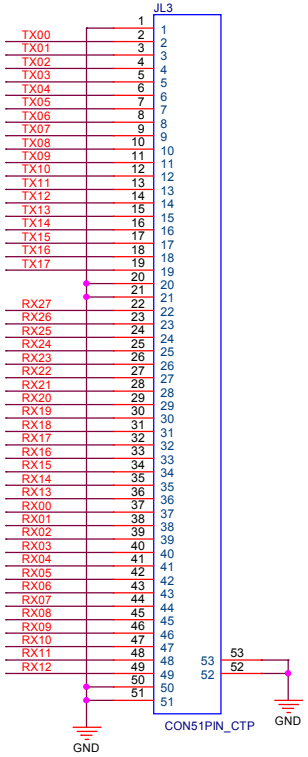

[11,14] TWI0-SCK — TP-SCK
[11,14] TWI0-SDA — TP-SDA
[11,14] CTP-INT — TP-INT
[11,14] CTP-RST — TP-RST

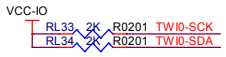

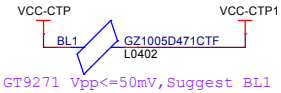

GT9271 Vpp<=50mV,Suggest BL1 Mount

VCC-IO — 20mA

VCC-MIPI-LCD — 20mA

VCC-CTP — 50mA

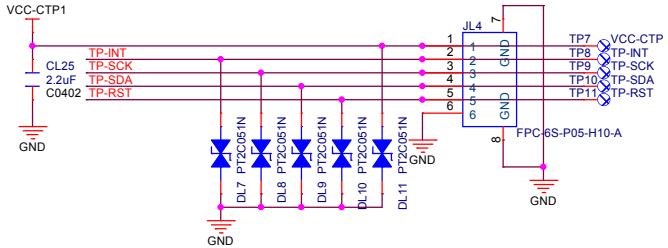

AllWinner Technology Co.,Ltd			
Design Name: A523-STD-AXP717C-AXP323-LPDDR4-4X			
Size: A3	Page Name: 15 CTP		Rev
Date: Tuesday, June 11, 2024	Sheet 15 of 22		

CAMERA

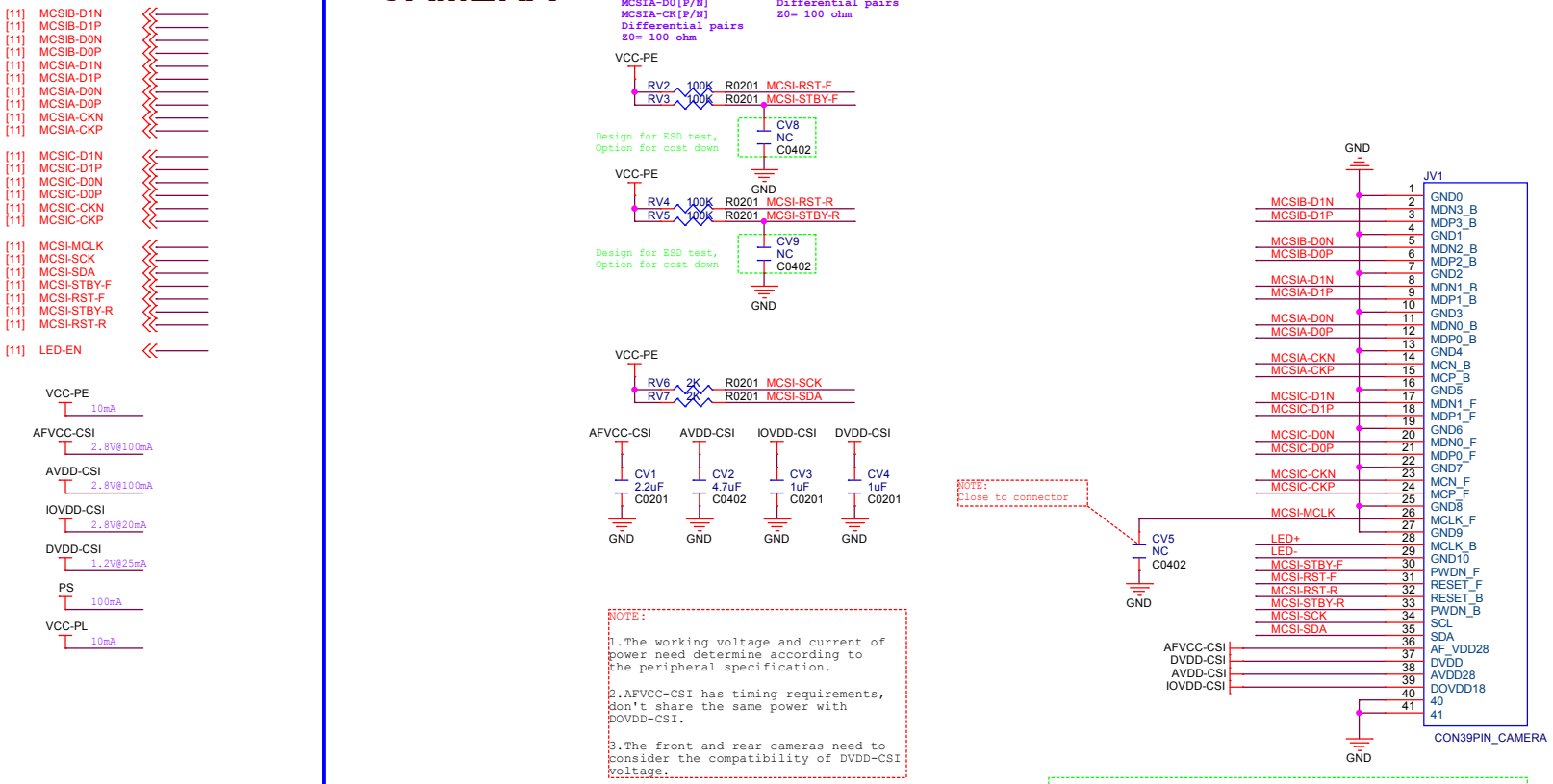

FLASH_LED

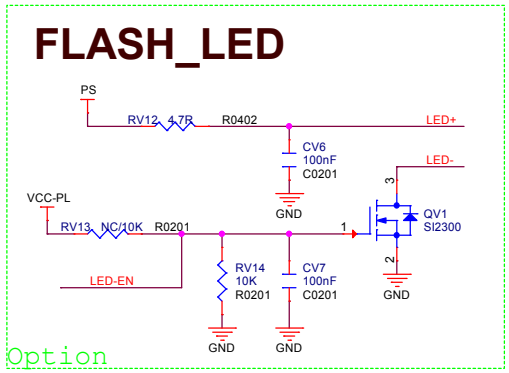

AllWinner Technology Co.,Ltd		
Design Name	A523-STD-AXP717C-AXP323-LPDDR4-4X	
Size A3	Page Name 16 CAMERA	Rev
Date: Tuesday, June 11, 2024	Sheet 16 of 22	

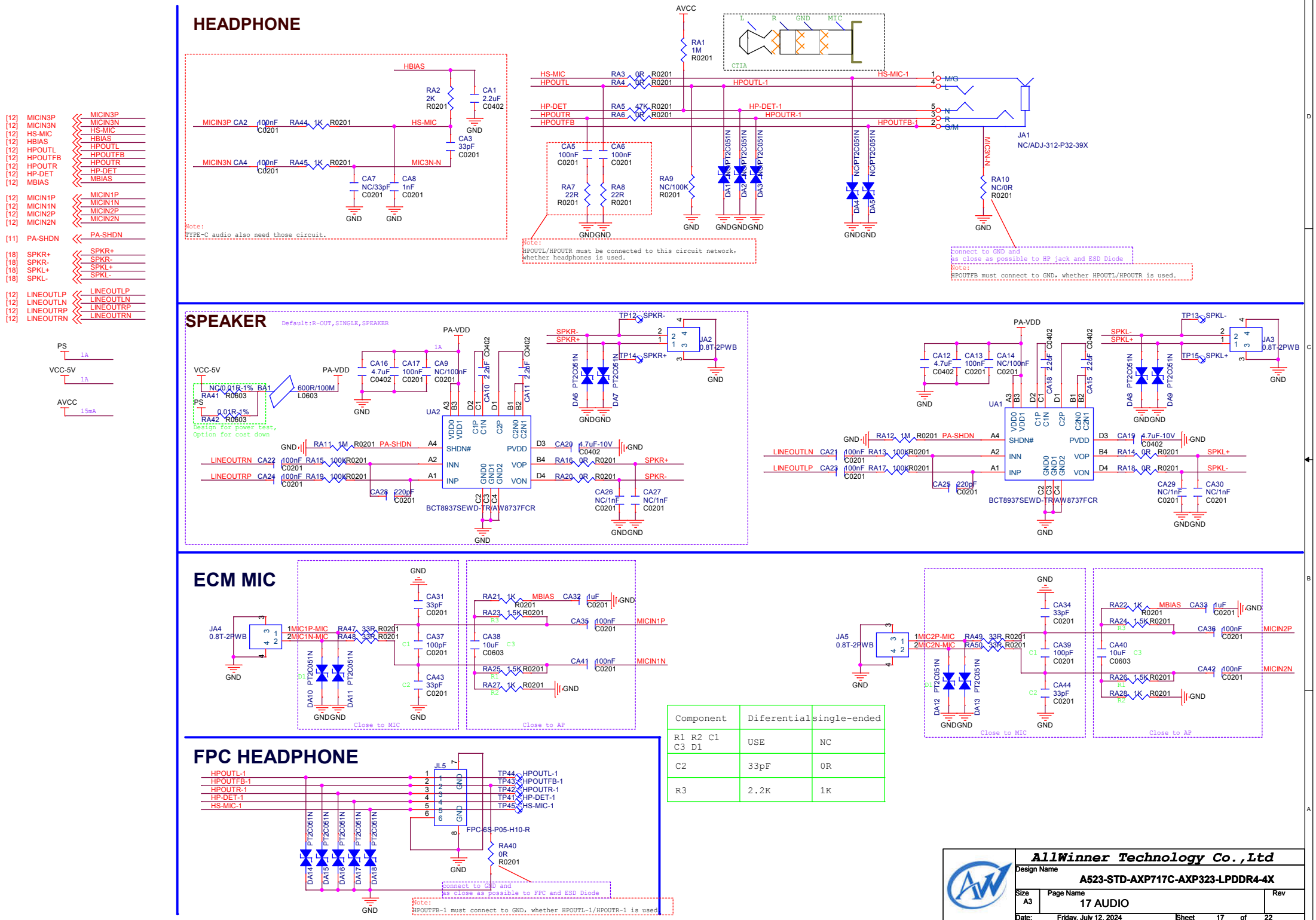

Component	Diferential	single-ended
R1 R2 C1 C3 D1	USE	NC
C2	33pF	0R
R3	2.2K	1K

TYPEC

TYPE-C AUDIO

MIC/GND SWITCH

Differential pairs :
Z0= 90 ohm

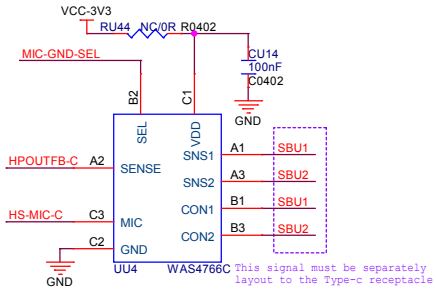

USB/AUDIO SWITCH

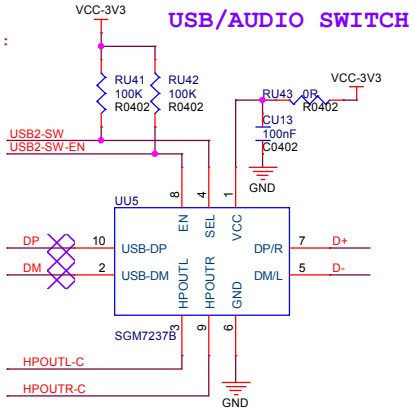

SEL	Function
0	GND=CON1, Sense=SNS1, MIC=SNS2
1	GND=CON2, Sense=SNS2, MIC=SNS1

EN	SEL	DP/R and DM/L Function
0	X	No Connect
1	0	HPOUTR/HPOUTL
1	1	USB-DP/USB-DM

Place the resistor close to the bifurcation point of the headphone holder

[12,18] HS-MIC — HS-MIC, RU45 0R R0402, HS-MIC-C
[12,18] HPOUTL — HPOUTL, RU46 0R R0402, HPOUTL-C
[12,18] HPOUTFB — HPOUTFB, RU47 0R R0402, HPOUTFB-C
[12,18] HPOUTR — HPOUTR, RU48 0R R0402, HPOUTR-C

[11] PH8 — R117 NC R0402 MIC-GND-SEL
[11] PH11 — R118 0R R0402 USB2-SW
[11] PH15 — R119 0R R0402 USB2-SW-EN

[12] USB2-DP — USB2-DP
[12] USB2-DM — USB2-DM

EDP1.3&USB3 SWITCH

Differential pairs :
Z0= 100 ohm

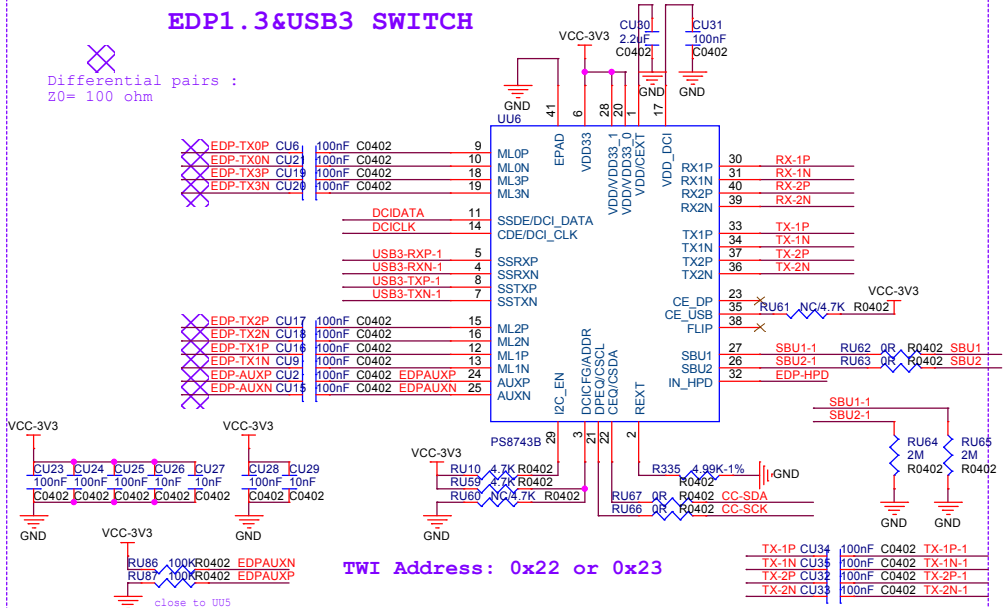

TWI Address: 0x22 or 0x23

[25] PL5 — R380 0R R0402 EDP-HPD

[12,15] EDP-TX0P
[12,15] EDP-TX0N
[12,15] EDP-TX1P
[12,15] EDP-TX1N
[12,15] EDP-TX2P
[12,15] EDP-TX2N
[12,15] EDP-TX3P
[12,15] EDP-TX3N
[12,15] EDP-AUXP
[12,15] EDP-AUXN
[11,12,15] EDP-HPD

[11] PH12 — R364 NC R0402 DCIDATA
[11] PH13 — R365 NC R0402 DCICLK
close to SOC
[12] USB3-TXP — CU10 100nF C0402 USB3-TX-P
[12] USB3-TXN — CU36 100nF C0402 USB3-TX-N
[12] USB3-RXP — RU16 0R R0402 USB3-RX-P
[12] USB3-RXN — RU15 0R R0402 USB3-RX-N

[7] CC1-AXP717C — CC1-AXP717C
[7] CC2-AXP717C — CC2-AXP717C

VCC-PL
R323 2K R0402 CC-SCK
R324 2K R0402 CC-SDA

VCC-PL
R325 10K R0402 CC-INT

[8,11,19] PMU-SDA — CC-SDA
[8,11,19] PMU-SCK — CC-SCK

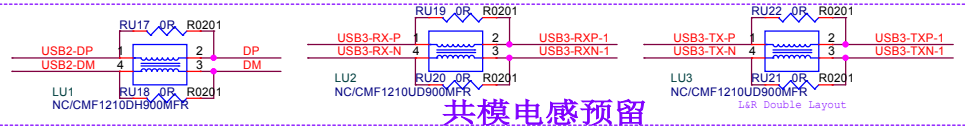

共模电感预留

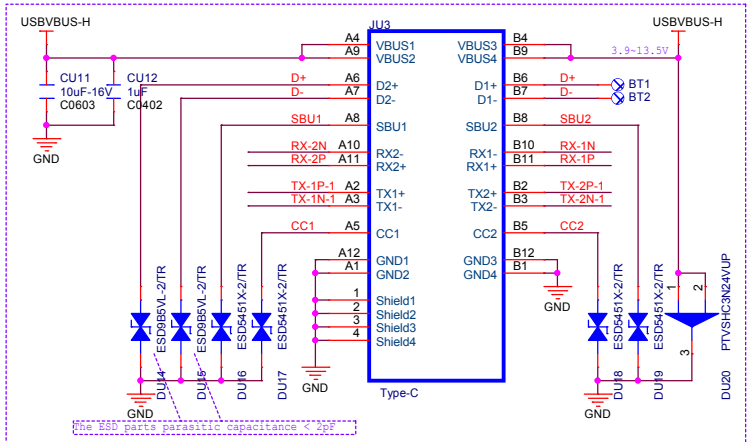

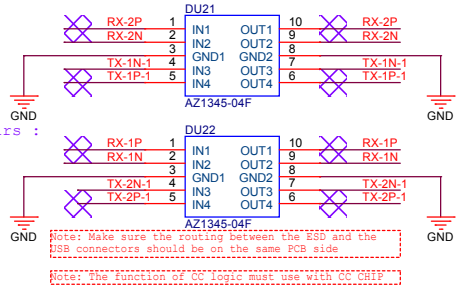

Differential pairs :
Z0= 90 ohm

Note: Make sure the routing between the ESD and the USB connectors should be on the same PCB side

Note: The function of CC logic must use with CC CHIP

typec connector

CC logic

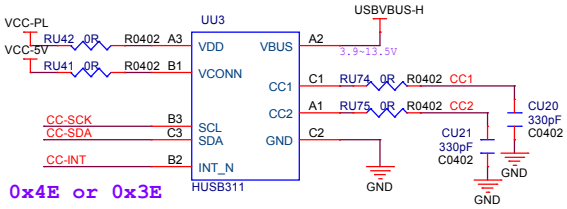

TWI Address: 0x4E or 0x3E

CC1-AXP717C RU72 NC/0R R0402 CC1
CC2-AXP717C RU73 NC/0R R0402 CC2

AllWinner Technology Co.,Ltd	
Design Name	A523-STD-AXP717C-AXP323-LPDDR4-4X
Size A3	Page Name 17 TYPEC DP OUT/Analog AUDIO
Rev	
Date: Saturday, July 13, 2024	Sheet 17 of 27

Default:Use AC107

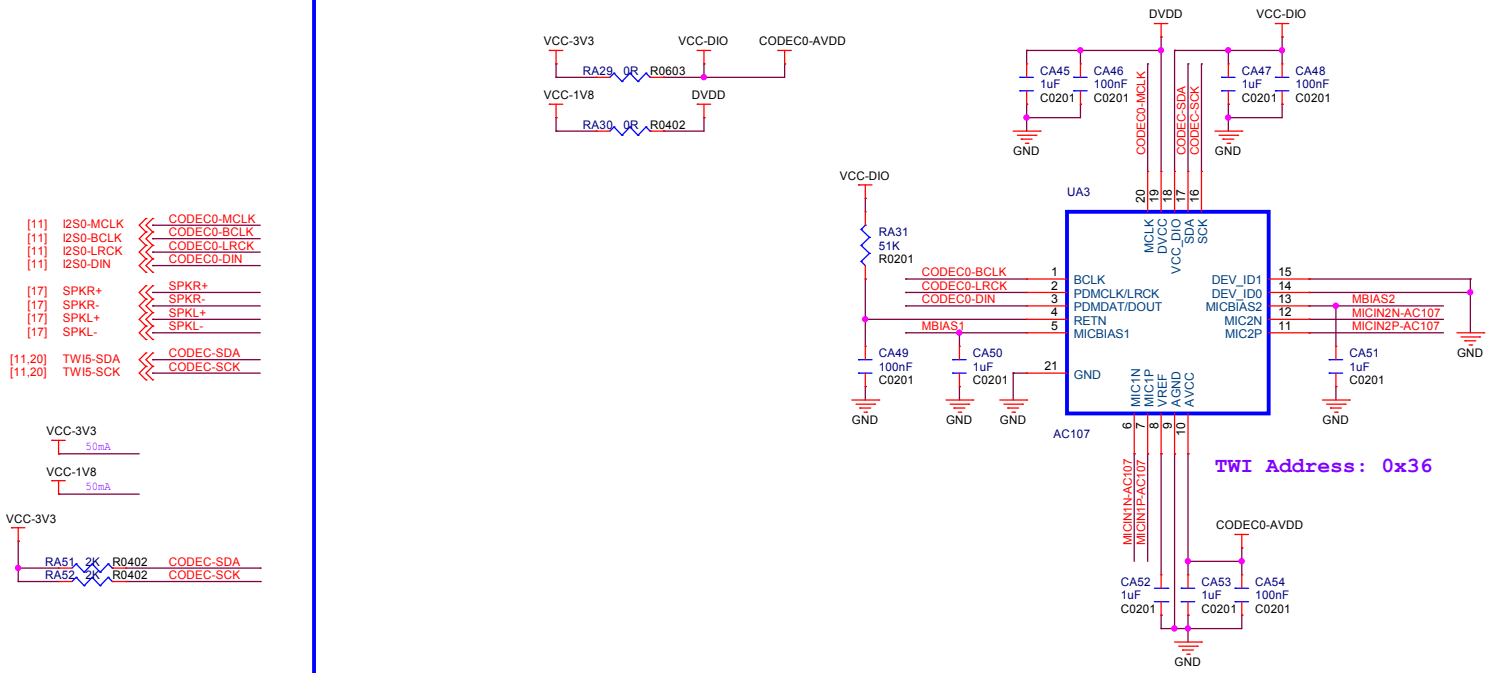

AEC

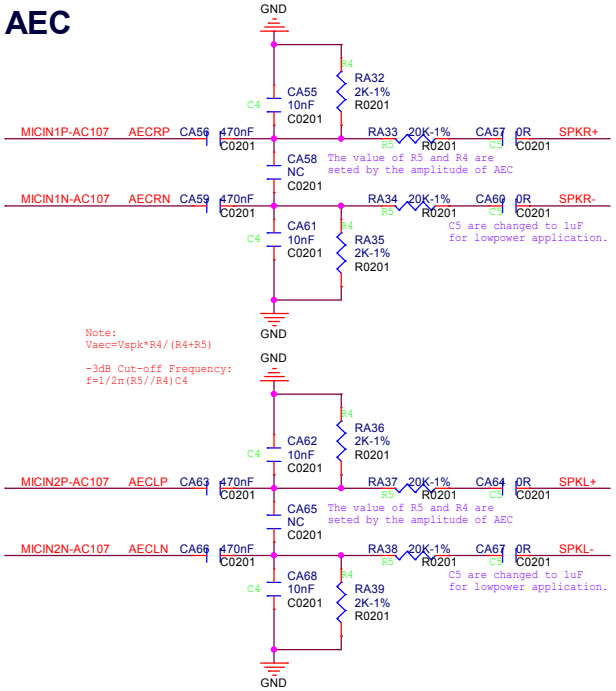

AllWinner Technology Co.,Ltd			
Design Name	A523-STD-AXP717C-AXP323-LPDDR4-4X		
Size A3	Page Name 18 AUDIO AC107		Rev
Date: Saturday, July 13, 2024	Sheet 18 of 22		

XR829 ON BOARD

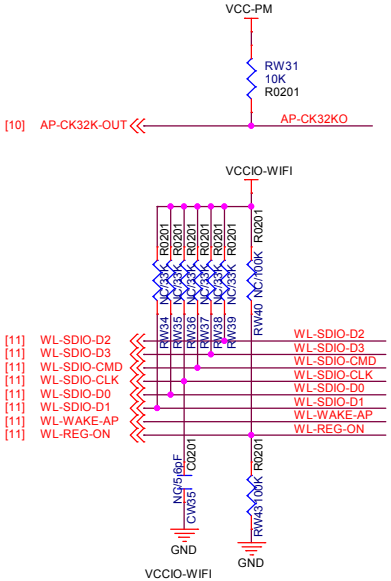

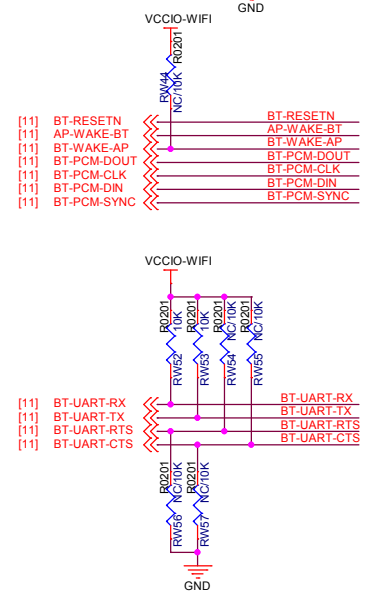

Model	Specifications	VCC-WIFI	VCCIO-WIFI
XR829	2.4G,BT4.2	2.7~5.5V @400mA	3.3/1.8V @10mA
AW869A	2.4G&5G,WiFi6,40MHz, BT5.2	3.3V@450mA	1.8V@xxxmA
AW869B	2.4G,WiFi6,40MHz, BT5.2	3.3V@350mA	1.8V@xxxmA
AW869C	2.4G&5G,WiFi6,80MHz, BT5.2	3.3V@xxxmA	1.8V@xxxmA
AP6281S	2.4G&5G,WiFi6E,80MHz, BT5.2	3.3V@1A	1.8V@xxxmA

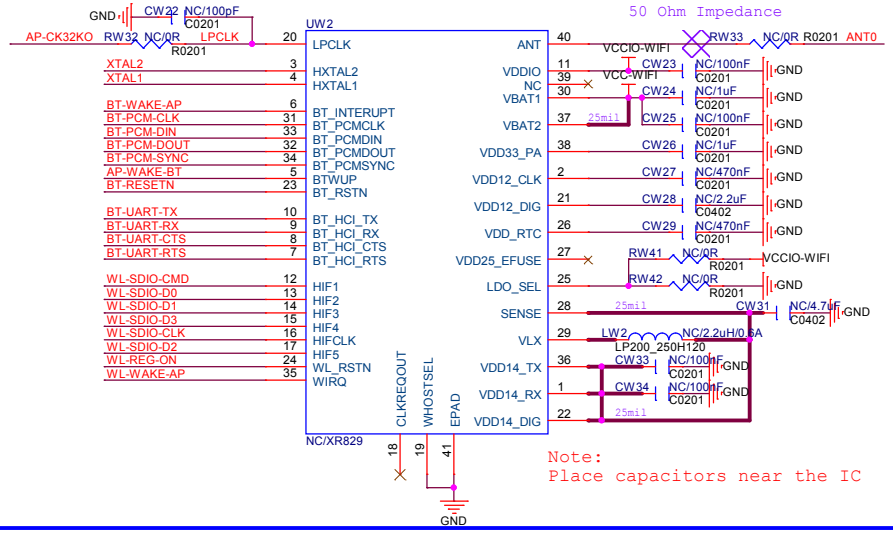

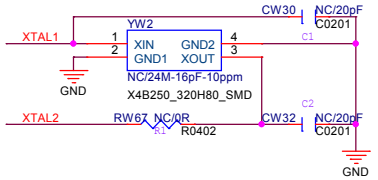

XR829 must be used in conjunction with this crystal : E3SB24E004304E,CL=20pF

AW869X Default:AW869A

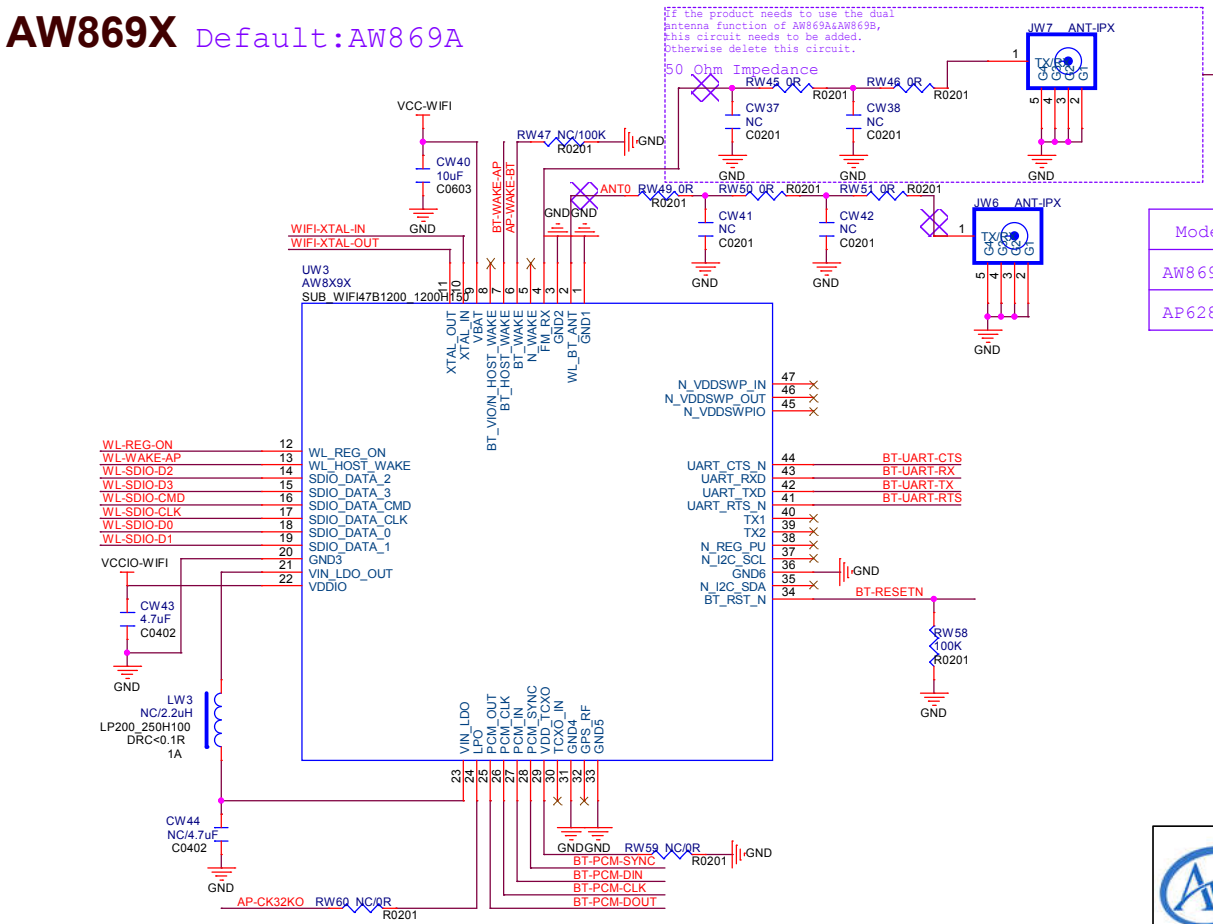

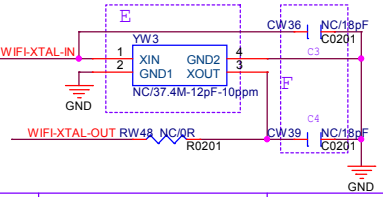

Model	E	F
AW869X	37.4M-12pF-10ppm	C3=C4=18pF
AP6281S	59.97M-9ppm-8pF	C3=C4=8pF

AllWinner Technology Co.,Ltd

Design Name	A523-STD-AXP717C-AXP323-LPDDR4-4X	
Size A3	Page Name 19 WIFI/BT AW869X/XR829	Rev
Date: Tuesday, June 11, 2024	Sheet 19 of 22	

AP6275P

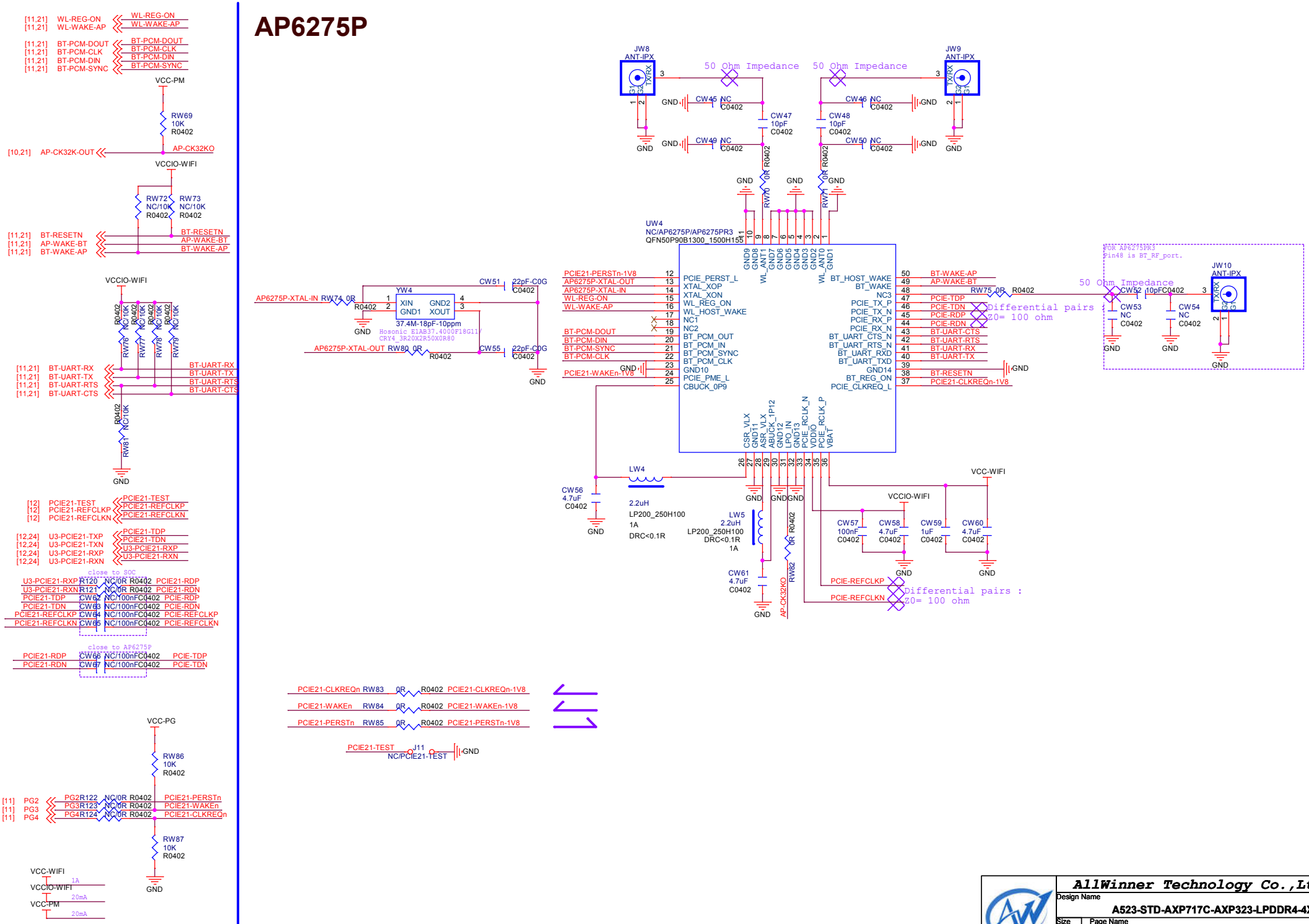

AllWinner Technology Co.,Ltd	
Design Name	A523-STD-AXP717C-AXP323-LPDDR4-4X
Size A3	Page Name 19 WIFI/BT PCIE AP6275P
Rev	
Date: Tuesday, June 11, 2024	Sheet 19 of 27

USB3.0 HOST&USB2.0 OTG

Differential pairs :
Z0= 90 ohm

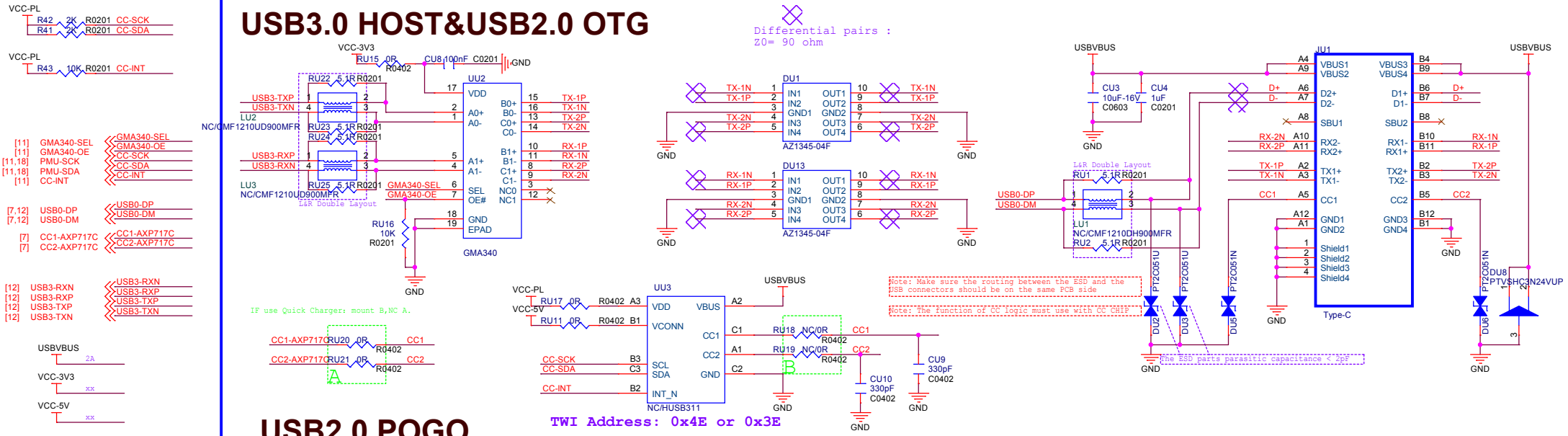

TWI Address: 0x4E or 0x3E

USB2.0 POGO

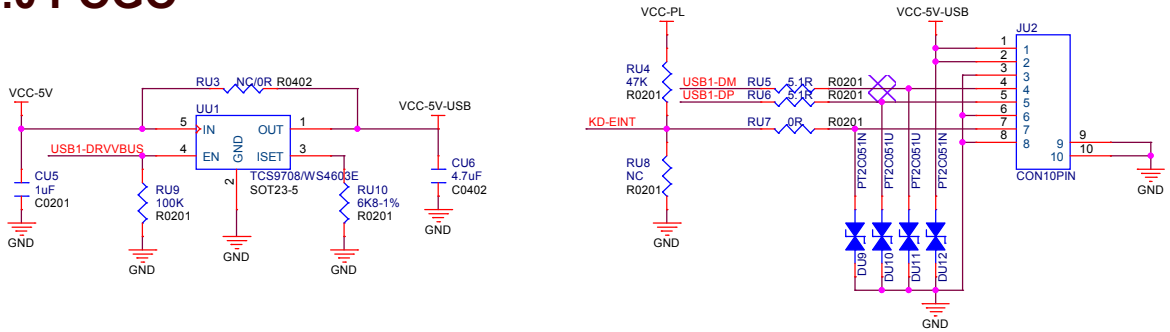

SD CARD

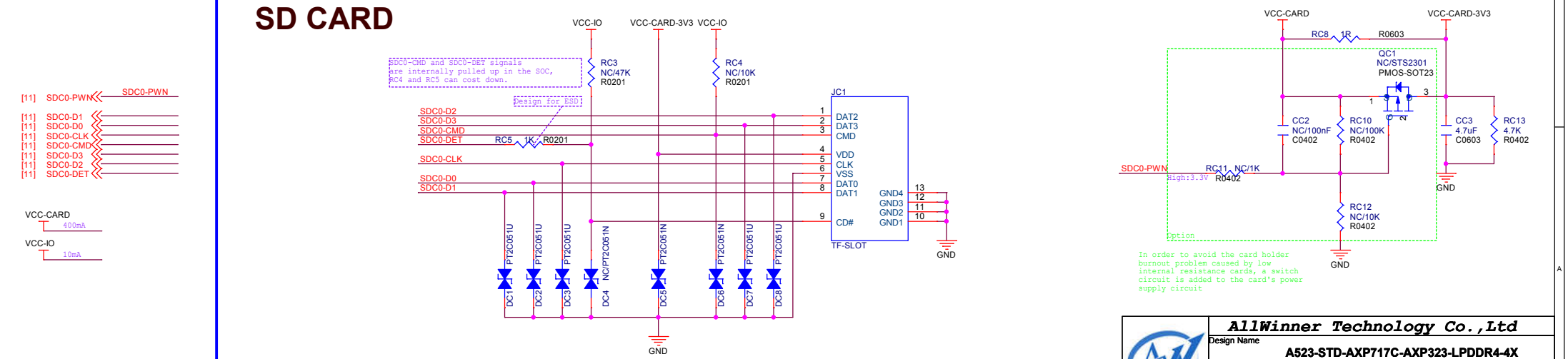

AllWinner Technology Co.,Ltd			
Design Name	A523-STD-AXP717C-AXP323-LPDDR4-4X		
Size A3	Page Name 20 USB/T-CARD		Rev
Date: Saturday, July 13, 2024	Sheet 20 of 22		

KEY

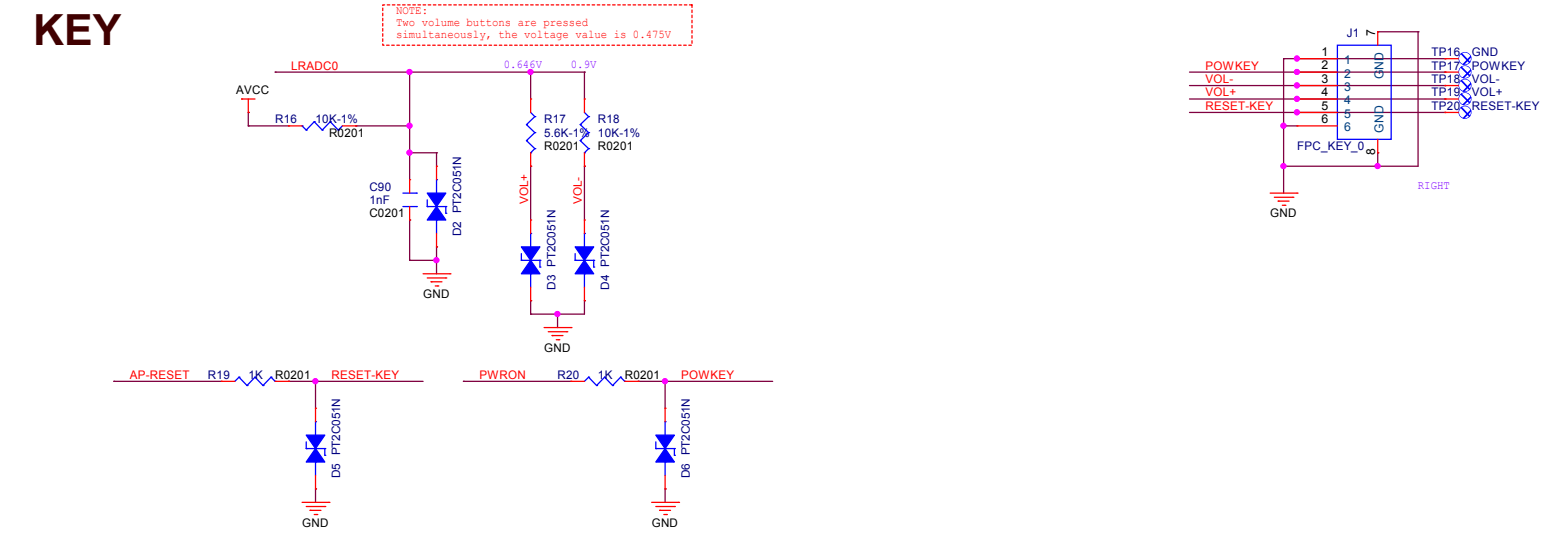

AVCC 1mA

VCC-3V3 20mA

[7,10] AP-RESET — AP-RESET
[12] LRADC0 — LRADC0
[7] PWRON — PWRON
[10] FEL — FEL

[11] CPUX-TX — CPUX-TX
[11] CPUX-RX — CPUX-RX
[11] CPUX-TMS — CPUX-TMS
[11] CPUX-TCK — CPUX-TCK
[11] CPUX-TDO — CPUX-TDO
[11] CPUX-TDI — CPUX-TDI

[8,11] CPUS-TX — CPUS-TX
[8,11] CPUS-RX — CPUS-RX
[8,11] CPUS-TMS — CPUS-TMS
[11,22] CPUS-TCK — CPUS-TCK
[11,22] CPUS-TDO — CPUS-TDO
[7,11] CPUS-TDI — CPUS-TDI

SHIELD

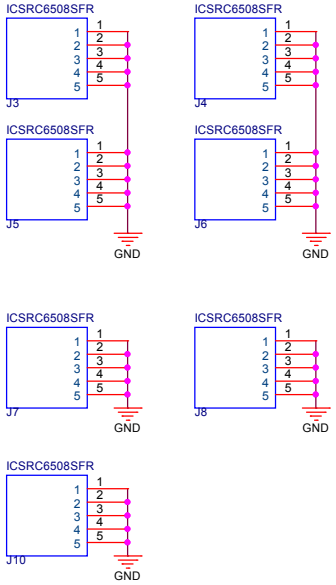

CPUX DEBUG

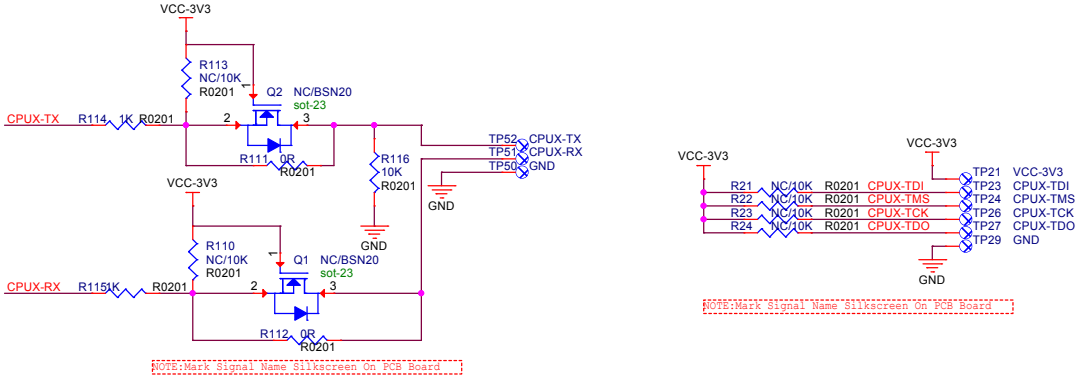

CPUS DEBUG

MARK POINT

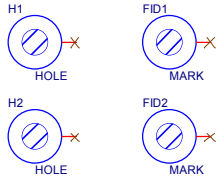

FEL

AllWinner Technology Co.,Ltd	
Design Name	A523-STD-AXP717C-AXP323-LPDDR4-4X
Size A3 / Page Name	21 KEY/DEBUG / Rev
Date: Tuesday, June 11, 2024	Sheet 21 of 22

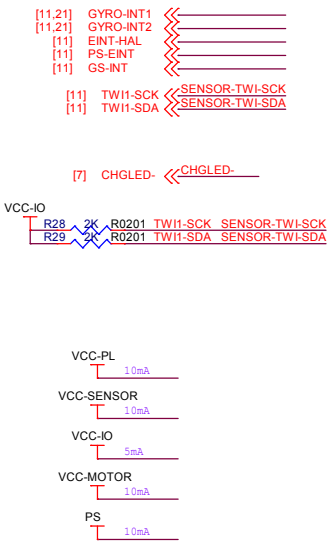

Gyroscope

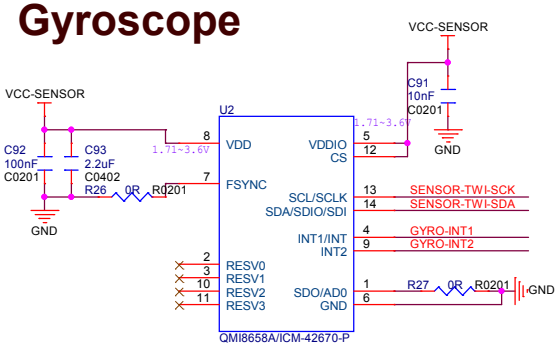

QMI8658A TWI Address: 0x6B
ICM-42670-P TWI Address: 0x68

Hall switch

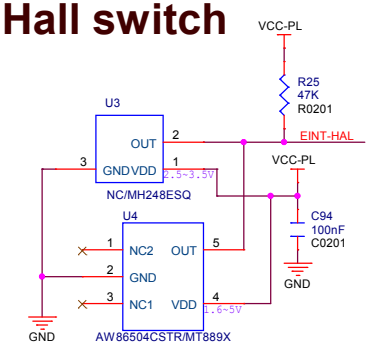

Magnetometer

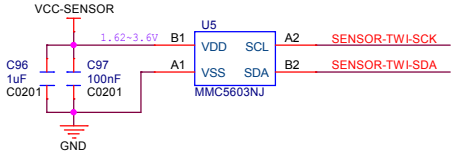

MMC5603NJ:1.62~3.6V TWI Address=0x30
AK09918C:1.65~1.95V TWI Address=0x0C

Note:AK09918C need use 1.8V POWER&I2C

ALS Sensor

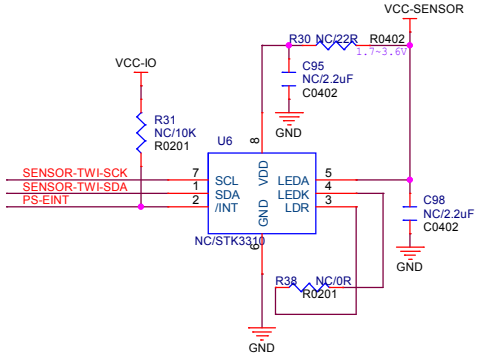

TWI Address: 0x48

CHLED

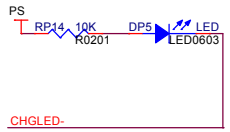

3axis G-sensor

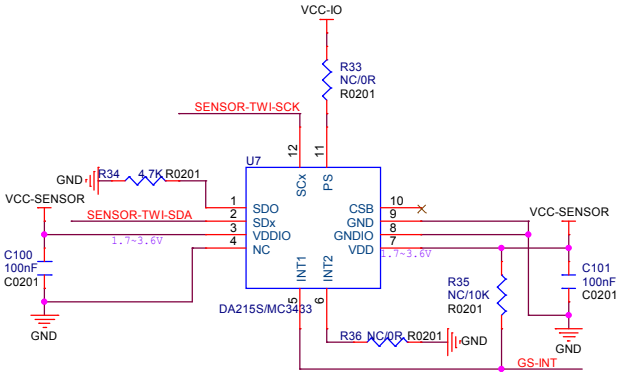

DA215S TWI Address: 0x4E
MC3433 TWI Address: 0x19

Motor

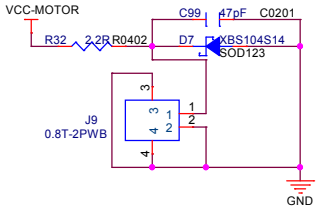

AllWinner Technology Co.,Ltd		
Design Name	A523-STD-AXP717C-AXP323-LPDDR4-4X	
Size A3	Page Name 22 Sensor	Rev
Date: Tuesday, June 11, 2024	Sheet 22 of 22	

RGMII

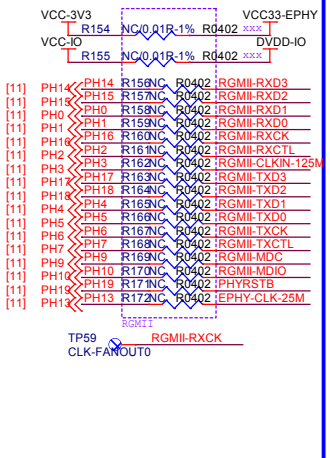

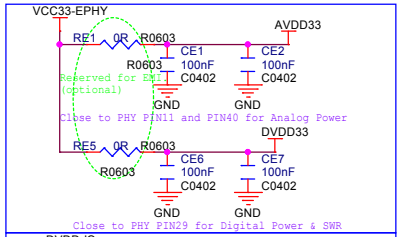

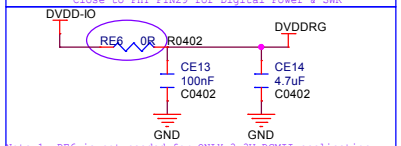

Note 1: RE6 is not needed for ONLY 3.3V RGMII application, and DVDDRG can be connected directly to DVDD33.
Note 2: DVDDRG must be short (or RE6 be mounted) to DVDD33 if the external RGMII 3.3V is selected.
Note 3: RE6 must be removed if the internal or external 2.5V/1.8V/1.5V RGMII is selected.
Note 4: CAPs must be closed to pin28 for EMI consideration.

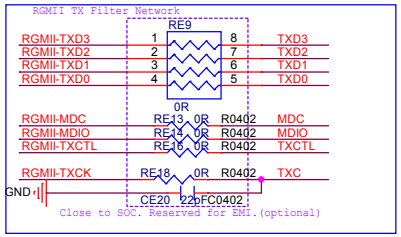

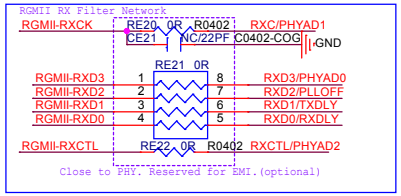

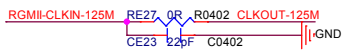

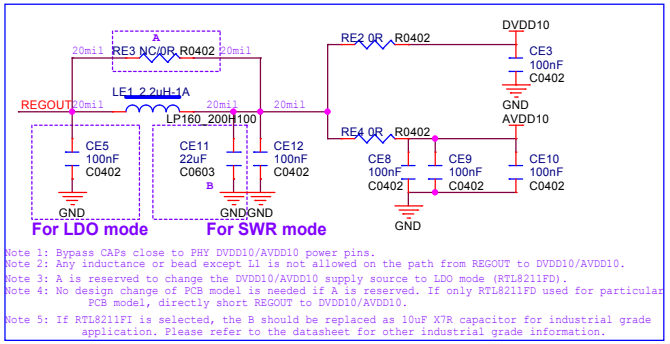

Note 1: Bypass CAPs close to PHY DVDD10/AVDD10 power pins.
Note 2: Any inductance or bead except L1 is not allowed on the path from REGOUT to DVDD10/AVDD10.
Note 3: A is reserved to change the DVDD10/AVDD10 supply source to LDO mode (RTL8211FD).
Note 4: No design change of PCB model is needed if A is reserved. If only RTL8211FD used for particular PCB model, directly short REGOUT to DVDD10/AVDD10.
Note 5: If RTL8211FI is selected, the B should be replaced as 10uF X7R capacitor for industrial grade application. Please refer to the datasheet for other industrial grade information.

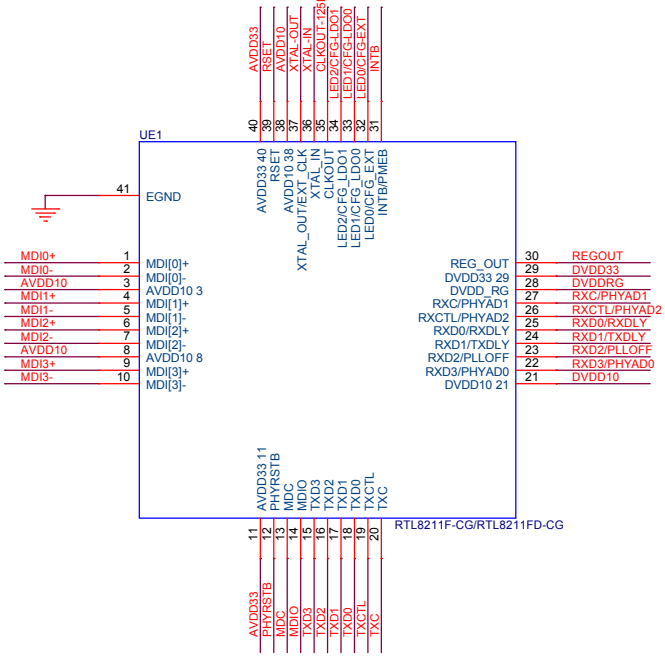

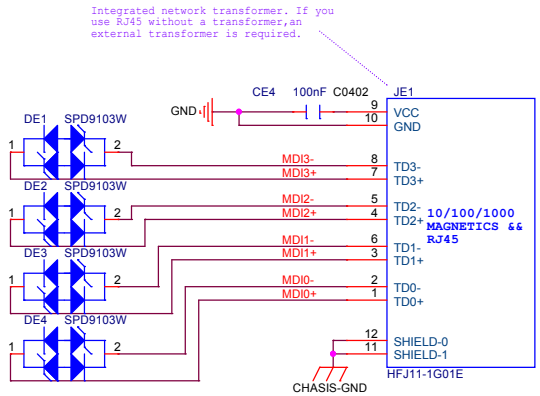

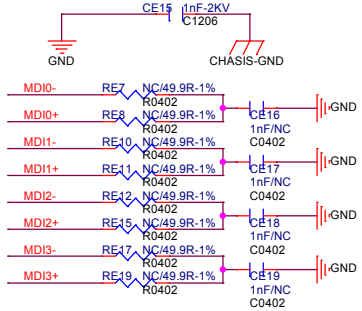

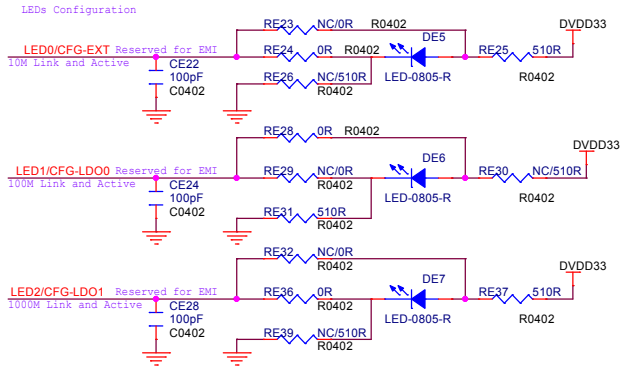

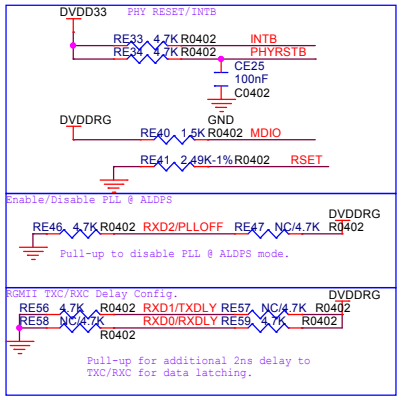

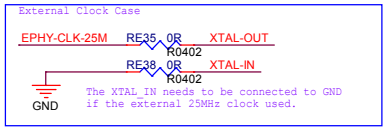

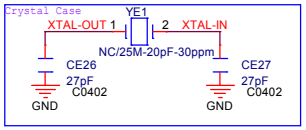

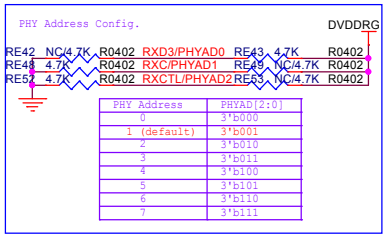

PHY Address	PHYAD[2:0]
0	3'b000
1 (default)	3'b001
2	3'b010
3	3'b011
4	3'b100
5	3'b101
6	3'b110
7	3'b111

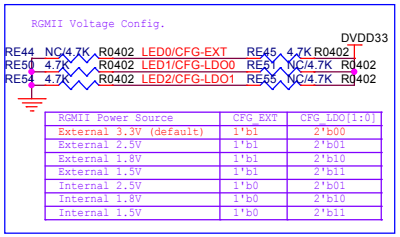

RGMII Power Source	CFG_EXT	CFG_LDO[1:0]
External 3.3V (default)	1'b1	2'b00
External 2.5V	1'b1	2'b01
External 1.8V	1'b1	2'b10
External 1.5V	1'b1	2'b11
Internal 2.5V	1'b0	2'b01
Internal 1.8V	1'b0	2'b10
Internal 1.5V	1'b0	2'b11

LED Resistances Setting	
CFG-EXT=1'b1	RE23(NC), RE24, RE25, RE26(NC)
CFG-EXT=1'b0	RE23, RE24(NC), RE25(NC), RE26
CFG-LDO0=1'b1	RE28(NC), RE29, RE30, R31(NC)
CFG-LDO0=1'b0	RE28, RE29(NC), RE30(NC), RE31
CFG-LDO1=1'b1	RE32(NC), RE36, RE37, RE38(NC)
CFG-LDO1=1'b0	RE32, RE36(NC), RE37(NC), RE38

AllWinner Technology Co.,Ltd

Design Name: A523-STD-AXP717C-AXP323-LPDDR4-4X

Size: A3 | Page Name: 23 RGMII | Rev

Date: Tuesday, June 11, 2024 | Sheet 23 of 27

DMIC

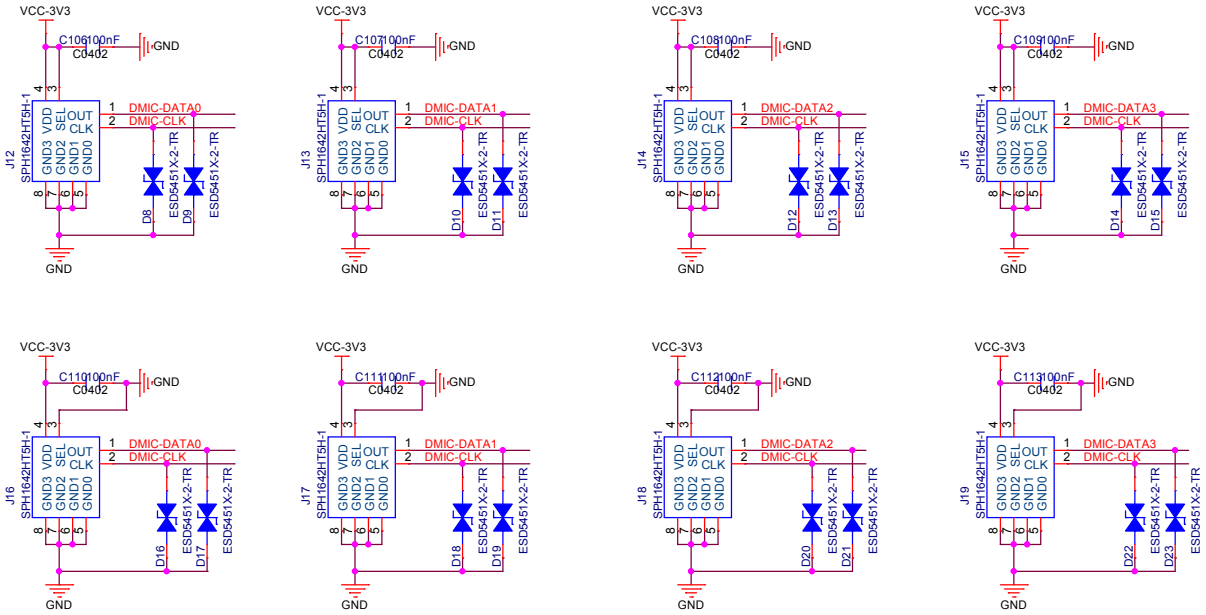

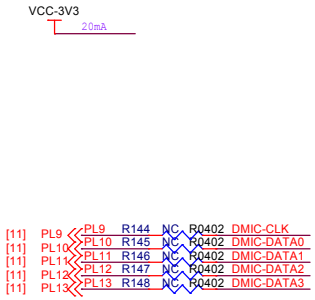

IR

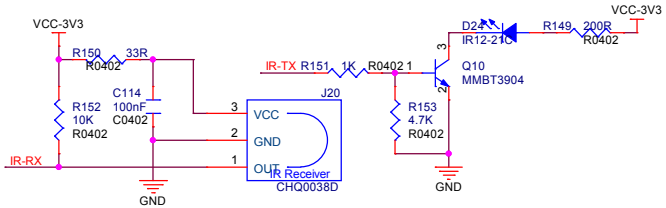

AllWinner Technology Co.,Ltd		
Design Name A523-STD-AXP717C-AXP323-LPDDR4-4X		
Size A3	Page Name 24 MEMS DMIC/IR	Rev
Date: Tuesday, June 11, 2024	Sheet 24 of 27	

QUICK CHARGER -1 CELL

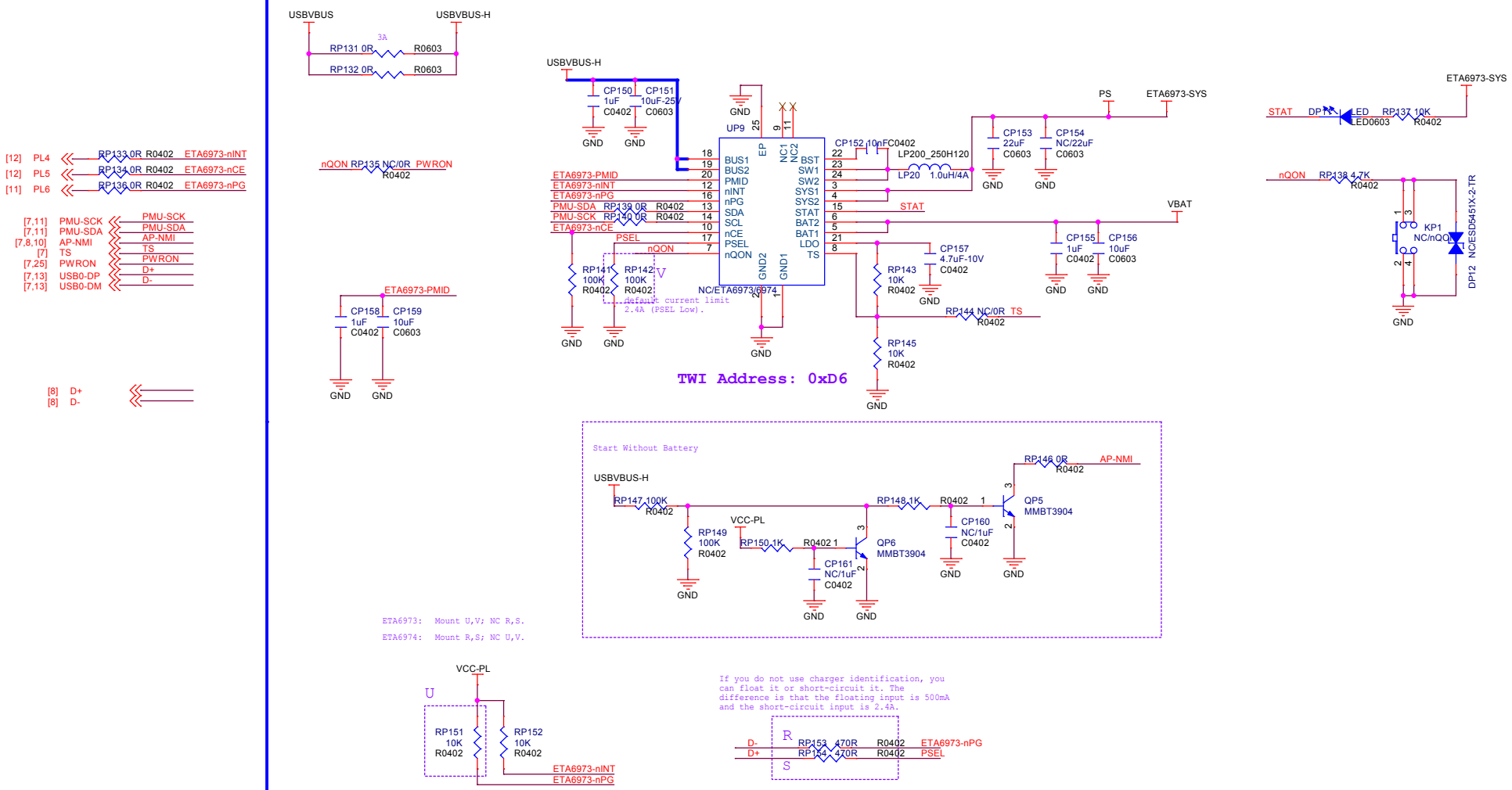

AllWinner Technology Co.,Ltd	
Design Name	A523-STD-AXP717C-AXP323-LPDDR4-4X
Size A3	Page Name 25 Quick Charger_1S lion
Rev	
Date: Tuesday, June 11, 2024	Sheet 25 of 27

QUICK CHARGER -nCELL

9V 2A

Sampling Resistor:
5mΩ Low parasitic inductor or semi alloy resistor(1206)
Temperature Coefficient < 100ppm
Accuracy 1%

Sampling Resistor:
5mΩ Low parasitic inductor or semi alloy resistor(1206)
Temperature Coefficient < 100ppm
Accuracy 1%

TLS12FTCR005
PA1206FRF470R005L
FMF06FTFR005-LHL

TLS12FTCR005
PA1206FRF470R005L
FMF06FTFR005-LHL

TWI Address: 0x3C

BSSET
10K: 1cell;
20K: 2cell;
30K: 3cell;
40K: 4cell;

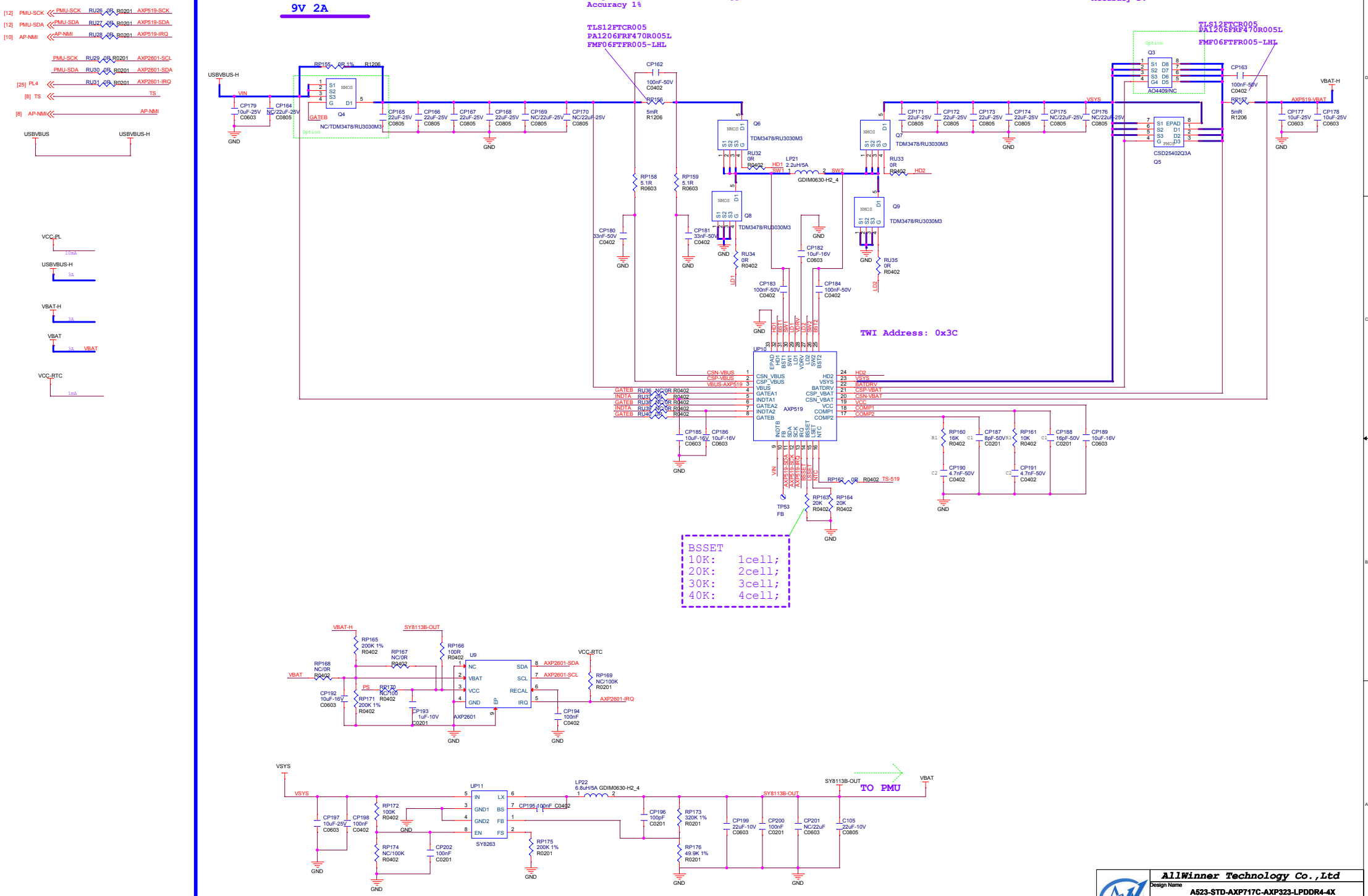

AllWinner Technology Co.,Ltd	
Design Name	A523-STD-AXP717C-AXP323-LPDDR4-4X
Size A2	Page Name 26 Quick Charger_2S lion
Rev	
Date: Tuesday, June 11, 2024	Sheet 26 of 27

GPS

Differential pairs :
Z0= 50 ohm

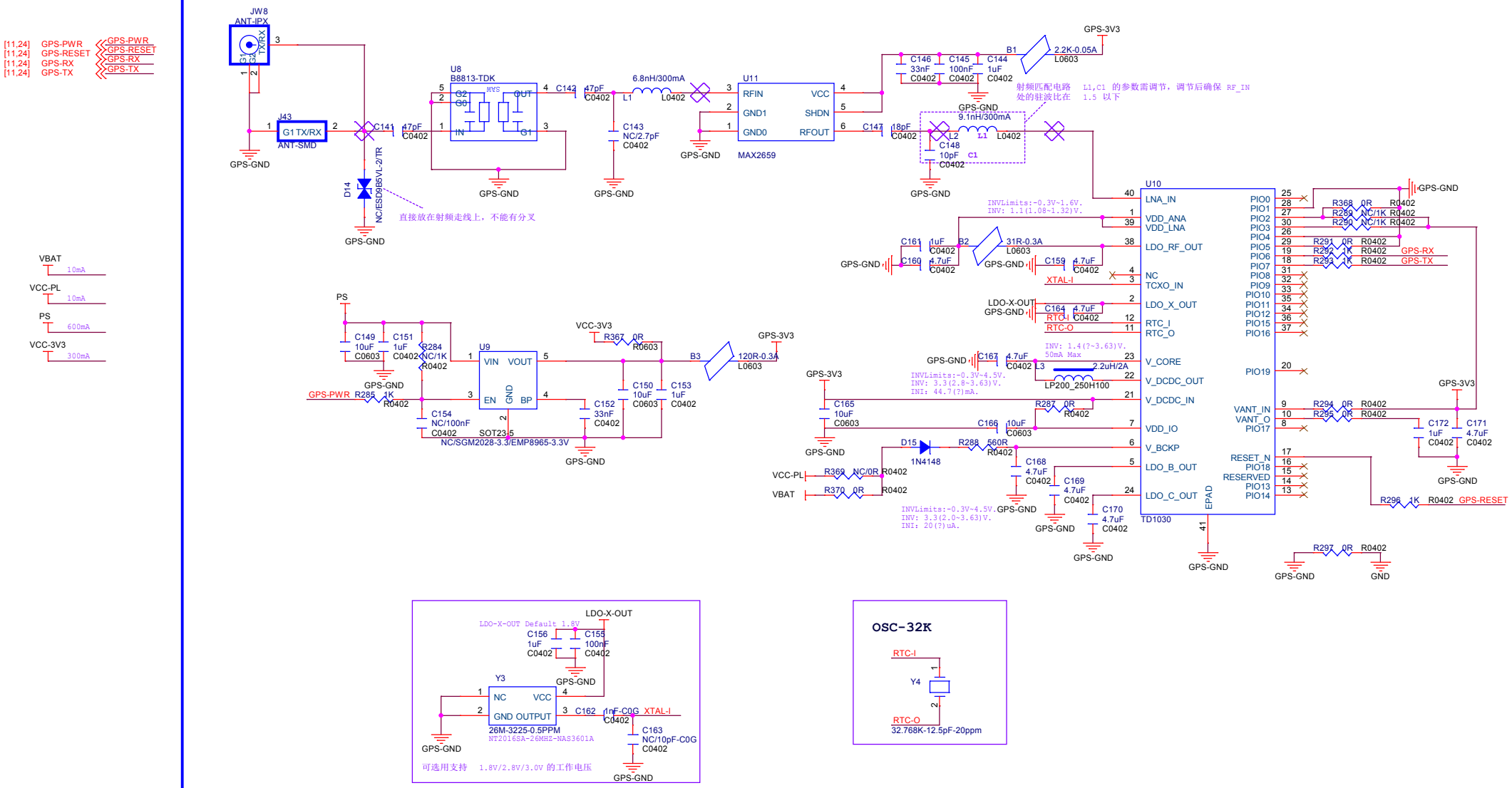

AllWinner Technology Co.,Ltd	
Design Name	A523-EVB6-AXP717C-AXP323-LPDDR4-4X
Size A3	Page Name 27 GPS
Rev	
Date: Tuesday, June 11, 2024	Sheet 27 of 27