DDR4

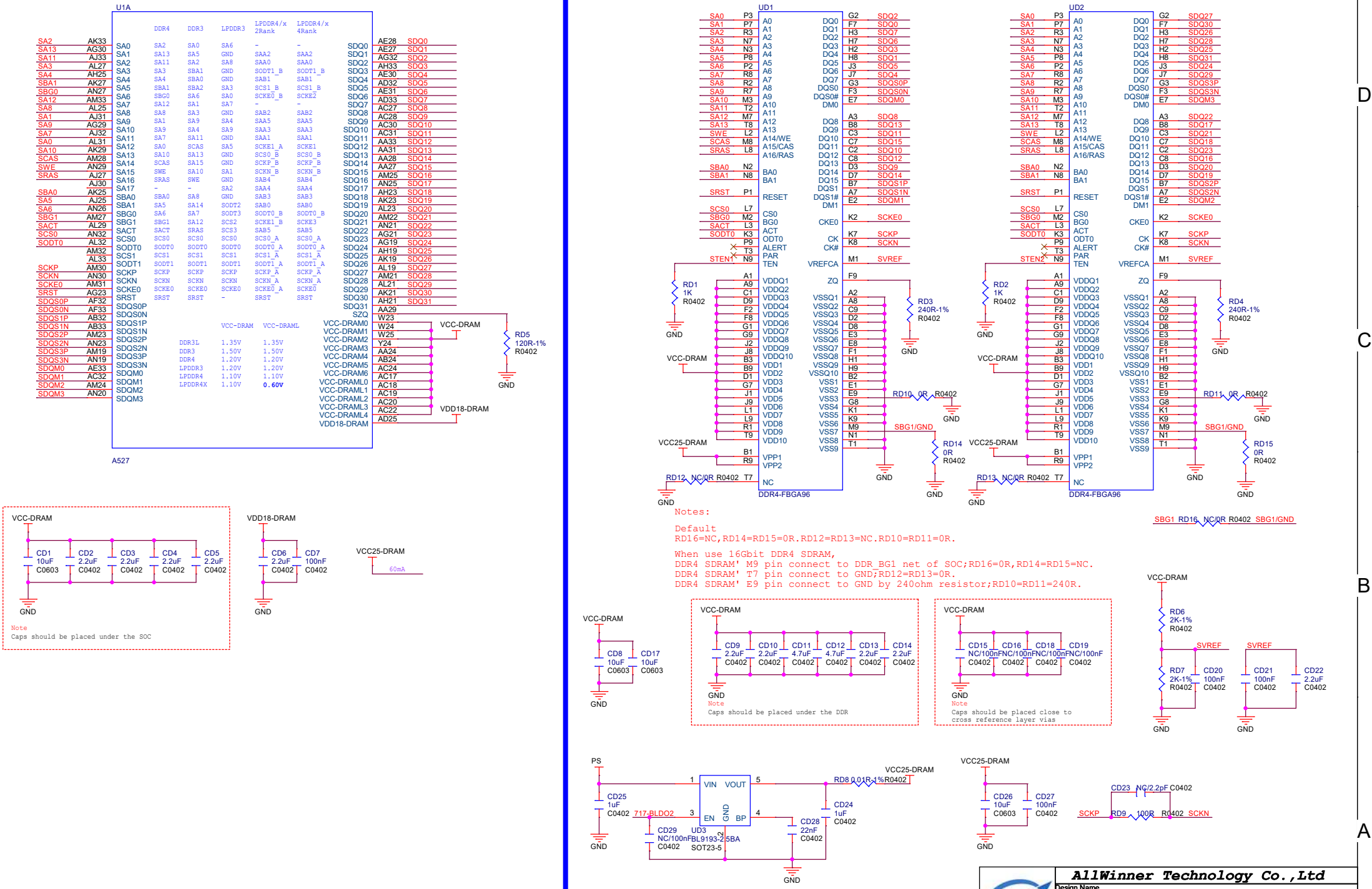

Notes:

Default
RD16=NC,RD14=RD15=0R.RD12=RD13=NC.RD10=RD11=0R.

When use 16Gbit DDR4 SDRAM,
DDR4 SDRAM' M9 pin connect to DDR_BG1 net of SOC;RD16=0R,RD14=RD15=NC.
DDR4 SDRAM' T7 pin connect to GND;RD12=RD13=0R.
DDR4 SDRAM' E9 pin connect to GND by 240ohm resistor;RD10=RD11=240R.

	DDR4	DDR3	LPDDR3	LPDDR4/x 2Rank	LPDDR4/x 4Rank
SA0	SA2	SA0	SA6	-	-
SA1	SA13	SA5	GND	SAA2	SAA2
SA2	SA11	SA2	SA8	SAA0	SAA0
SA3	SA3	SBA1	GND	SODT1_B	SODT1_B
SA4	SA4	SBA0	GND	SAB1	SAB1
SA5	SBA1	SBA2	SA3	SCS1_B	SCS1_B
SA6	SBG0	SA6	SA0	SCKE0_B	SCKE2
SA7	SA12	SA1	SA7	-	-
SA8	SA8	SA3	GND	SAB2	SAB2
SA9	SA1	SA9	SA4	SAA5	SAA5
SA10	SA9	SA4	SA9	SAA3	SAA3
SA11	SA7	SA11	GND	SAA1	SAA1
SA12	SA0	SCAS	SA5	SCKE1_A	SCKE1
SA13	SA10	SA13	GND	SCS0_B	SCS0_B
SA14	SCAS	SA15	GND	SCKP_B	SCKP_B
SA15	SWE	SA10	SA1	SCKN_B	SCKN_B
SA16	SRAS	SWE	GND	SAB4	SAB4
SA17	-	-	SA2	SAA4	SAA4
SBA0	SBA0	SA8	GND	SAB3	SAB3
SBA1	SA5	SA14	SODT2	SAB0	SAB0
SBG0	SA6	SA7	SODT3	SODT0_B	SODT0_B
SBG1	SBG1	SA12	SCS2	SCKE1_B	SCKE3
SACT	SACT	SRAS	SCS3	SAB5	SAB5
SCS0	SCS0	SCS0	SCS0	SCS0_A	SCS0_A
SODT0	SODT0	SODT0	SODT0	SODT0_A	SODT0_A
SCS1	SCS1	SCS1	SCS1	SCS1_A	SCS1_A
SODT1	SODT1	SODT1	SODT1	SODT1_A	SODT1_A
SCKP	SCKP	SCKP	SCKP	SCKP_A	SCKP_A
SCKN	SCKN	SCKN	SCKN	SCKN_A	SCKN_A
SCKE0	SCKE0	SCKE0	SCKE0	SCKE0_A	SCKE0
SRST	SRST	SRST	-	SRST	SRST

	VCC-DRAM	VCC-DRAML
DDR3L	1.35V	1.35V
DDR3	1.50V	1.50V
DDR4	1.20V	1.20V
LPDDR3	1.20V	1.20V
LPDDR4	1.10V	1.10V
LPDDR4X	1.10V	**0.60V**

CD1	10uF	C0603	VCC-DRAM
CD2	2.2uF	C0402	VCC-DRAM
CD3	2.2uF	C0402	VCC-DRAM
CD4	2.2uF	C0402	VCC-DRAM
CD5	2.2uF	C0402	VCC-DRAM
CD6	2.2uF	C0402	VDD18-DRAM
CD7	100nF	C0402	VDD18-DRAM
CD8	10uF	C0603	VCC-DRAM
CD17	10uF	C0603	VCC-DRAM
CD9	2.2uF	C0402	VCC-DRAM
CD10	2.2uF	C0402	VCC-DRAM
CD11	4.7uF	C0402	VCC-DRAM
CD12	4.7uF	C0402	VCC-DRAM
CD13	2.2uF	C0402	VCC-DRAM
CD14	2.2uF	C0402	VCC-DRAM
CD15	NC/100nF	C0402	VCC-DRAM
CD16	NC/100nF	C0402	VCC-DRAM
CD18	NC/100nF	C0402	VCC-DRAM
CD19	NC/100nF	C0402	VCC-DRAM
CD20	100nF	C0402	SVREF
CD21	100nF	C0402	SVREF
CD22	2.2uF	C0402	SVREF
CD25	1uF	C0402	PS
CD24	1uF	C0402	VCC25-DRAM
CD26	10uF	C0603	VCC25-DRAM
CD27	100nF	C0402	VCC25-DRAM
CD28	22nF	C0402	VCC25-DRAM
CD29	NC/100nF	C0402	VCC25-DRAM

RD6	2K-1%	R0402
RD7	2K-1%	R0402

AllWinner Technology Co.,Ltd		
Design Name	A527-REF-DDR4-16X2	
Size A3	Page Name 01 DDR4 16X2	Rev
Date: Monday, December 11, 2023	Sheet 1 of 2	

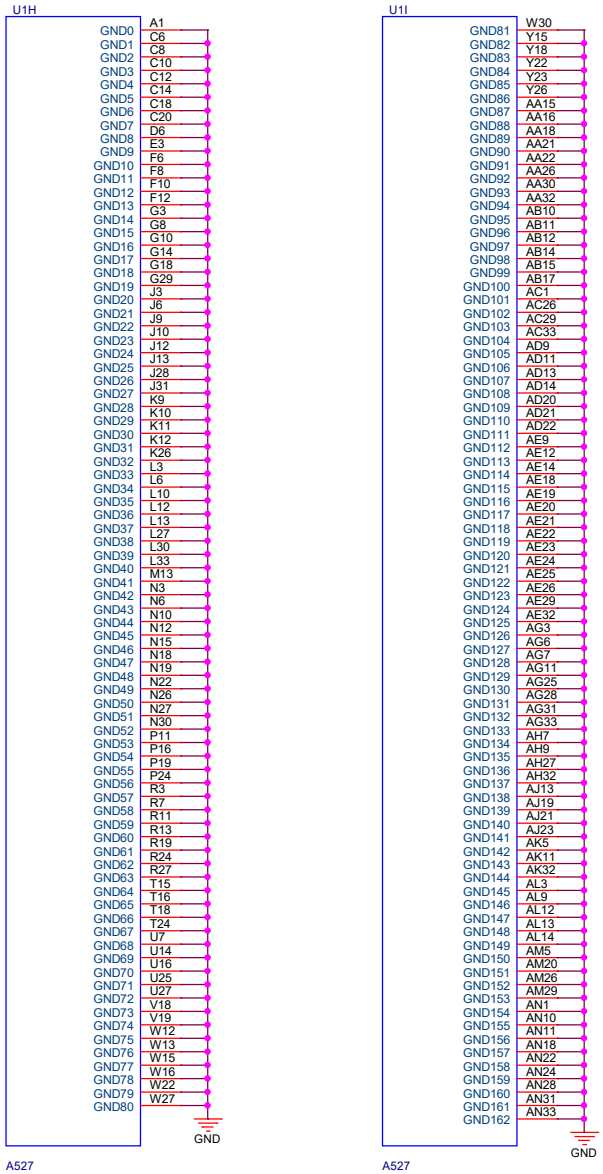

	AllWinner Technology Co.,Ltd
	Design Name: T527-REF-DDR4-16X2
Size: A3	Page Name: 02 SOC
Rev	
Date: Monday, December 11, 2023	Sheet 2 of 2