VERSION HISTORY

Index:

Page1 01 VERSION HISTORY
Page2 02 BLOCK DIAGRAM
Page3 03 POWER TREE
Page4 04 POWER SEQUENCE
Page5 05 GPIO ASSIGNMENT
Page6 06 TWI&UART MAP
Page7 07 POWER-AXP717C+DCDC
Page8 08 POWER-ACIN
Page9 09 A527 DDR
Page10 10 A527 SYS
Page11 11 A527 GPIO1
Page12 12 A527 GPIO2
Page13 13 A527 Analog&High-speed
Page14 14 EMMC
Page15 15 MIPI LCM
Page16 16 CTP
Page17 17 CAMERA
Page18 18 AUDIO
Page19 19 AUDIO AC107
Page20 20 WIFI/BT RTL8852BS
Page21 21 USB/T-CARD
Page22 22 KEY/DEBUG/HDMI
Page23 23 Sensor

Revision	Description	Date
Ver 0.9	Release version	2022-12-2
Ver 1.0	Modify	2023-02-08

Description

Note

Option

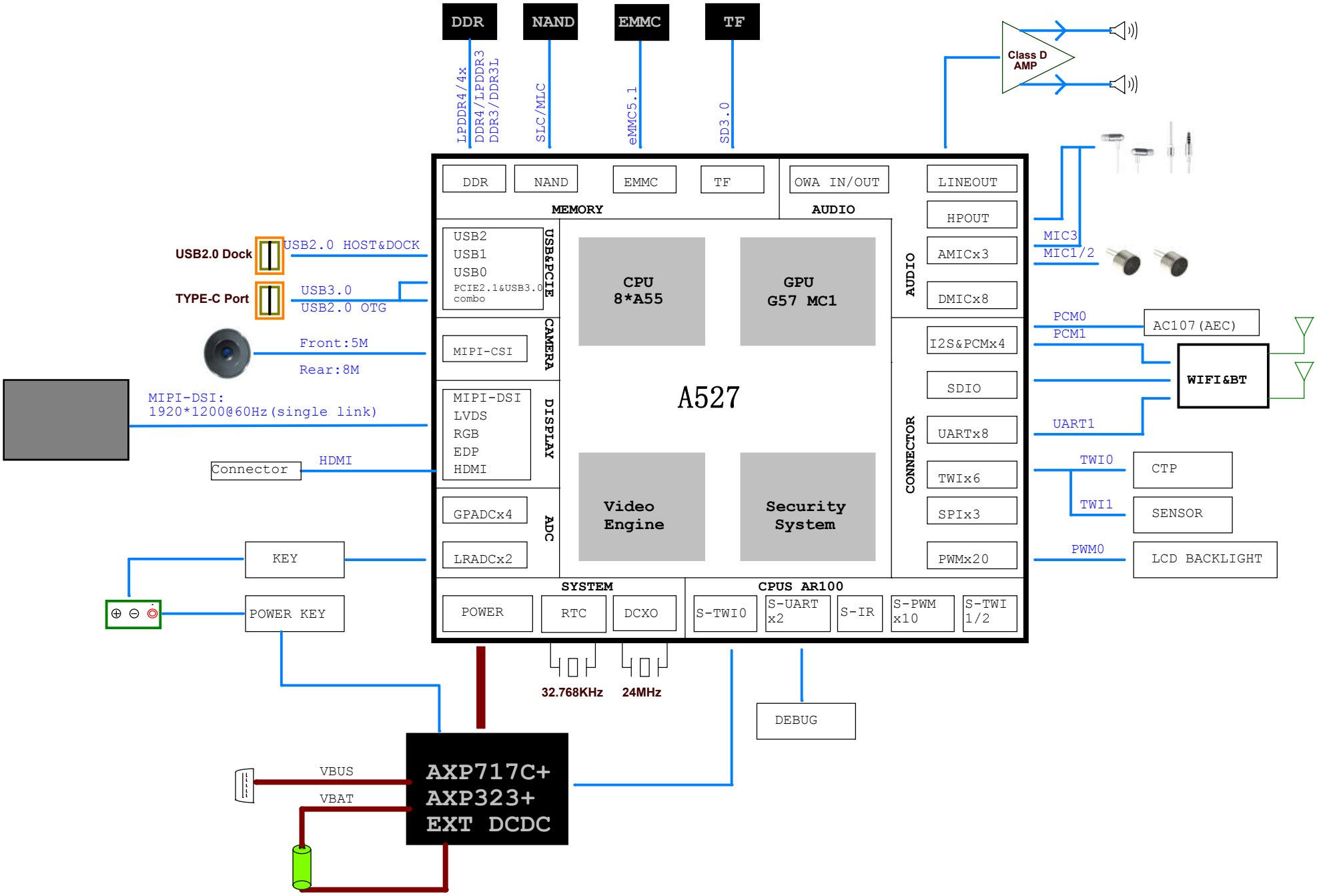

BLOCK

AllWinner Technology Co.,Ltd	
Design Name	A527-PRO2-AXP717C-LPDDR4-4X
Size A3	Page Name 02 BLOCK DIAGRAM
Rev	
Date: Wednesday, July 05, 2023	Sheet 2 of 23

POWER TREE

DEFAULT POWER ON

DEFAULT POWER OFF

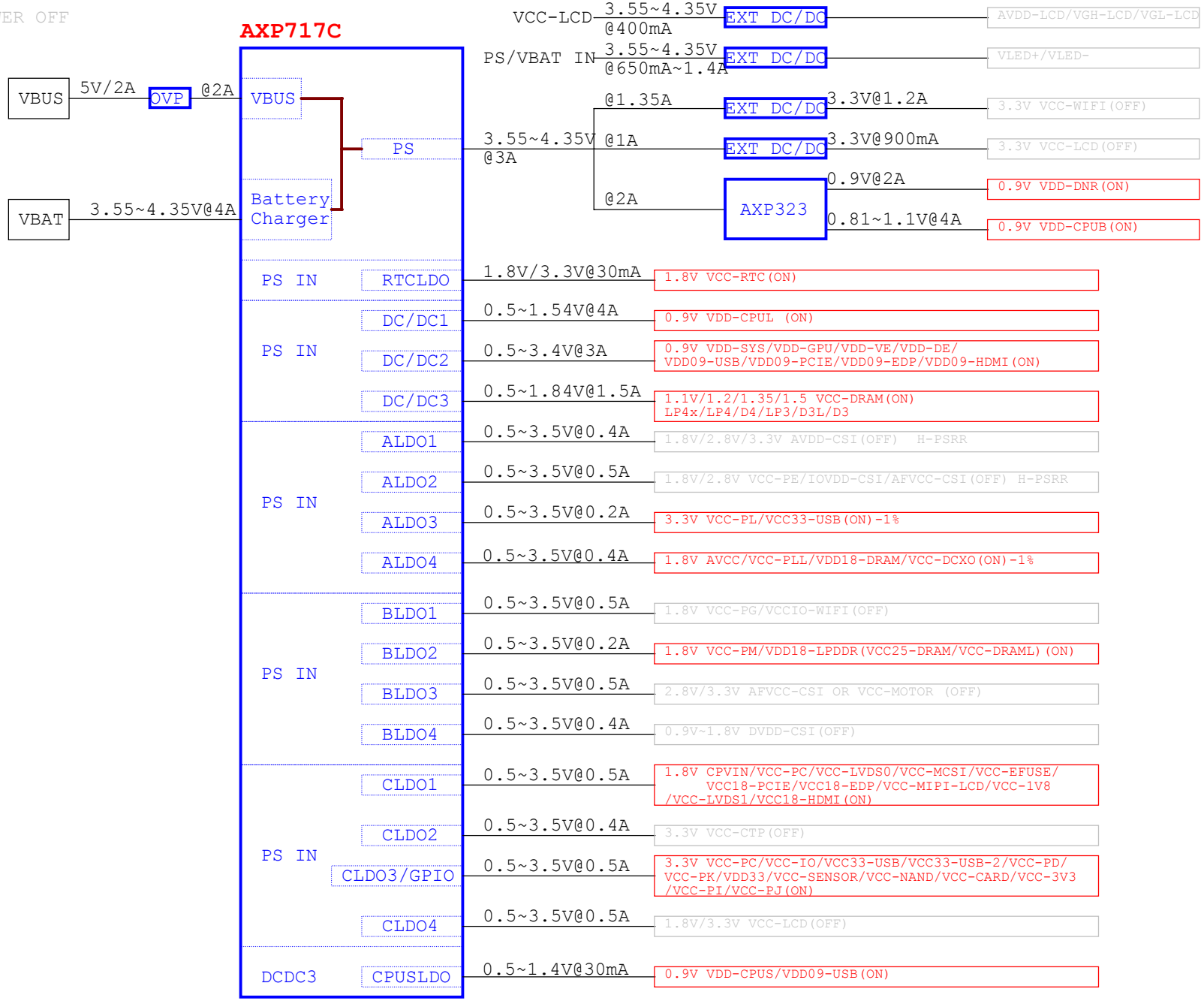

AllWinner Technology Co.,Ltd			
Design Name	A527-PRO2-AXP717C-LPDDR4-4X		
Size A3	Page Name 03 POWER TREE		Rev
Date: Wednesday, July 05, 2023	Sheet 3 of 23		

POWER SEQUENCE

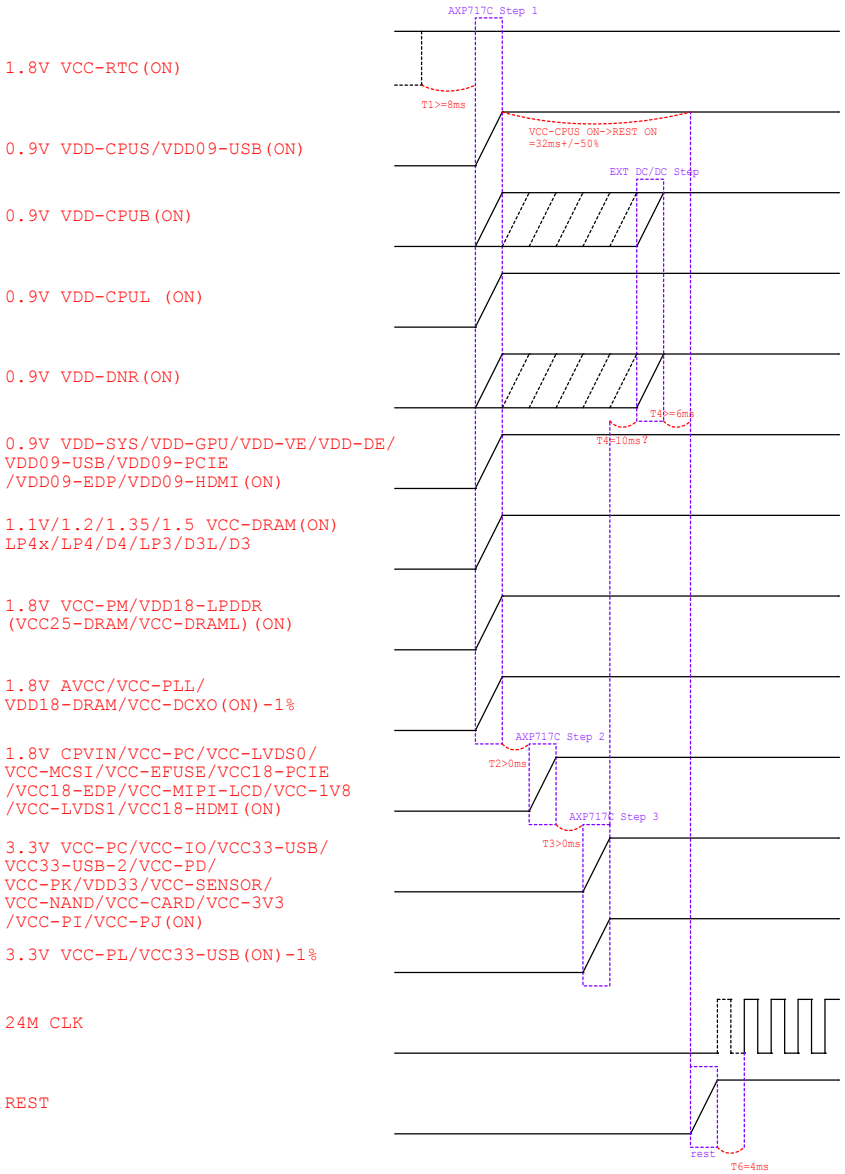

1.VCC-LVDS0 must be ramped before VCC-PD
2.VCC-MCSI must be ramped before VCC-PK
3.VCC-EFUSE must be ramped after VDD-SYS
4.VCC-LVDS1 must be ramped before VCC-PJ

SWITCH STATUS

	normal work	super standby	shut down	Android static main interface
1.8V VCC-RTC(ON)	ON	ON	ON	ON
0.9V VDD-CPUL (ON)	ON	OFF	OFF	ON
0.9V VDD-SYS/VDD-GPU/VDD-VE/VDD-DE/ VDD09-USB/VDD09-PCIE/VDD09-EDP/VDD09-HDMI(ON)	ON	OFF	OFF	ON
1.1V/1.2/1.35/1.5 VCC-DRAM(ON) LP4x/LP4/D4/LP3/D3L/D3	ON	ON	OFF	ON
1.8V/2.8V/3.3V AVDD-CSI(OFF) H-PSRR	OFF/ON	OFF	OFF	OFF
1.8V/2.8V VCC-PE/IOVDD-CSI/AFVCC-CSI(OFF) H-PSRR	OFF/ON	OFF	OFF	OFF
3.3V VCC-PL/VCC33-USB(ON)-1%	ON	ON	OFF	ON
1.8V AVCC/VCC-PLL/VDD18-DRAM/VCC-DCXO(ON)-1%	ON	OFF	OFF	ON
1.8V VCC-PG/VCCIO-WIFI(OFF)	OFF/ON	OFF	OFF	OFF
1.8V VCC-PM/VDD18-LPDDR(VCC25-DRAM/VCC-DRAML)(ON)	ON	ON	OFF	ON
2.8V/3.3V AFVCC-CSI OR VCC-MOTOR (OFF)	OFF/ON	OFF	OFF	OFF
0.9V~1.8V DVDD-CSI(OFF)	OFF/ON	OFF	OFF	OFF
1.8V CPVIN/VCC-PC/VCC-LVDS0/VCC-MCSI/VCC-EFUSE/ VCC18-PCIE/VCC18-EDP/VCC-MIPI-LCD/VCC-1V8 /VCC-LVDS1/VCC18-HDMI(ON)	ON	OFF	OFF	ON
3.3V VCC-CTP(OFF)	OFF/ON	OFF	OFF	ON
3.3V VCC-PC/VCC-IO/VCC33-USB/VCC33-USB-2/VCC-PD/ VCC-PK/VDD33/VCC-SENSOR/VCC-NAND/VCC-CARD/VCC-3V3 /VCC-PI/VCC-PJ(ON)	ON	OFF	OFF	ON
1.8V/3.3V VCC-LCD(OFF)	OFF/ON	OFF	OFF	ON
0.9V VDD-CPUS/VDD09-USB(ON)	ON	ON	OFF	ON
AVDD-LCD/VGH-LCD/VGL-LCD	OFF/ON	OFF	OFF	ON
VLED+/VLED-	OFF/ON	OFF	OFF	ON
3.3V VCC-WIFI(OFF)	OFF/ON	OFF	OFF	OFF
3.3V VCC-LCD(OFF)	OFF/ON	OFF	OFF	ON
0.9V VDD-DNR(ON)	ON	OFF	OFF	ON
0.9V VDD-CPUB(ON)	ON	OFF	OFF	ON

GPIO ASSIGNMENT

PIN	Define	CFG	Function
PB0	CPUX-TMS	4	DEBUG
PB1	CPUX-TCK	4	
PB2	CPUX-TDO	4	
PB3	CPUX-TDI	4	
PB4	I2S0-MCLK	3	I2S
PB5	I2S0-BCLK	3	
PB6	I2S0-LRCK	3	
PB7			
PB8	I2S0-DIN	3	
PB9	CPUX-TX	2	DEBUG
PB10	CPUX-RX	2	
PB11			
PB12			
PB13			
PB14			

PIN	Define	CFG	Function
PC0	SDC2-DS	3	eMMC
PC1	SDC2-RST	3	
PC2			
PC3			
PC4			
PC5	SDC2-CLK	3	
PC6	SDC2-CMD	3	
PC7			
PC8	SDC2-D3	3	
PC9	SDC2-D4	3	
PC10	SDC2-D0	3	
PC11	SDC2-D5	3	
PC12			
PC13	SDC2-D1	3	
PC14	SDC2-D6	3	
PC15	SDC2-D2	3	
PC16	SDC2-D7	3	

PIN	Define	CFG	Function
PF0	SDC0-D1	2	CARD
PF1	SDC0-D0	2	
PF2	SDC0-CLK	2	
PF3	SDC0-CMD	2	
PF4	SDC0-D3	2	
PF5	SDC0-D2	2	
PF6	SDC0-DET	0	

PIN	Define	CFG	Function
PD0			LCD
PD1			
PD2			
PD3			
PD4			
PD5			
PD6			
PD7			
PD8			
PD9			
PD10	MIPI-DSI1-DP0	4	
PD11	MIPI-DSI1-DN0	4	
PD12	MIPI-DSI1-DP1	4	
PD13	MIPI-DSI1-DN1	4	
PD14	MIPI-DSI1-CKP	4	
PD15	MIPI-DSI1-CKN	4	
PD16	MIPI-DSI1-DP2	4	
PD17	MIPI-DSI1-DN2	4	
PD18	MIPI-DSI1-DP3	4	
PD19	MIPI-DSI1-DN3	4	
PD20			
PD21			
PD22	LCD-RST	1	
PD23	LCD-PWM	3	

PIN	Define	CFG	Function
PG0	WL-SDIO-CLK	2	WIFI/BT
PG1	WL-SDIO-CMD	2	
PG2	WL-SDIO-D0	2	
PG3	WL-SDIO-D1	2	
PG4	WL-SDIO-D2	2	
PG5	WL-SDIO-D3	2	
PG6	BT-UART-RX	2	
PG7	BT-UART-TX	2	
PG8	BT-UART-CTS	2	
PG9	BT-UART-RTS	2	
PG10			
PG11	BT-PCM-CLK	3	
PG12	BT-PCM-SYNC	3	
PG13	BT-PCM-DIN	3	
PG14	BT-PCM-DOUT	3	

PIN	Define	CFG	Function
PM0	WL-WAKE-AP	0	WIFI/BT
PM1	WL-REG-ON	1	
PM2	BT-RESETN	1	
PM3	AP-WAKE-BT	1	
PM4	BT-WAKE-AP	0	
PM5	WL-DIS-N	1	

PIN	Define	CFG	Function
PH0	TWI0-SCK	2	TWI
PH1	TWI0-SDA	2	
PH2	TWI1-SCK	2	
PH3	TWI1-SDA	2	
PH4	PS-EINT	14	GPIO
PH5	OVP-ACOK	0	
PH6	PA-SHDN	1	
PH7	GMA340-SEL	1	
PH8	GMA340-OE	1	
PH9	CTP-INT	14	
PH10	CTP-RST	1	
PH11	GS-INT	14	
PH12	TWI3-SCK	3	TWI
PH13	TWI3-SDA	3	
PH14	3V3-1V8-EN	1	GPIO
PH15			
PH16			
PH17	DDR-PARA-SEL-GPIO	0	
PH18	LCD-BL-EN	1	
PH19			

PIN	Define	CFG	Function
PL0	PMU-SCK	2	CPUS
PL1	PMU-SDA	2	
PL2	USB-VBUSDET	0	
PL3	ACIN-DET	0	
PL4	USB0-EN	1	
PL5	GYRO-INT1	14	
PL6	GYRO-INT2	14	
PL7	VCC-WIFI-PWREN	1	
PL8	USB1-DRVVBUS	1	
PL9	EINT-HAL	14	
PL10	KD-EINT	14	
PL11	LED-EN	1	
PL12	USB-DRVVBUS	1	
PL13	CC-INT	14	

PIN	Define	CFG	Function
PK0	MCSIA-D0N	2	MIPI-CSI
PK1	MCSIA-D0P	2	
PK2	MCSIA-D1N	2	
PK3	MCSIA-D1P	2	
PK4	MCSIA-CKN	2	
PK5	MCSIA-CKP	2	
PK6	MCSIB-D0N	2	
PK7	MCSIB-D0P	2	
PK8	MCSIB-D1N	2	
PK9	MCSIB-D1P	2	
PK10			
PK11			
PK12	MCSIC-D0N	2	
PK13	MCSIC-D0P	2	
PK14	MCSIC-D1N	2	
PK15	MCSIC-D1P	2	
PK16	MCSIC-CKN	2	
PK17	MCSIC-CKP	2	
PK18			
PK19			
PK20			
PK21			
PK22			
PK23			

PIN	Define	CFG	Function
PE0			CAMERA
PE1			
PE2			
PE3			
PE4			
PE5			
PE6	MCSIB-STBY-F	1	
PE7	MCSIB-RST-F	1	
PE8	MCSIA-STBY-R	1	
PE9	MCSIA-RST-R	1	
PE10			
PE11			
PE12			
PE13	MCSI-SCK	2	
PE14	MCSI-SDA	2	
PE15	MCSI-MCLK	2	

TWI MAP

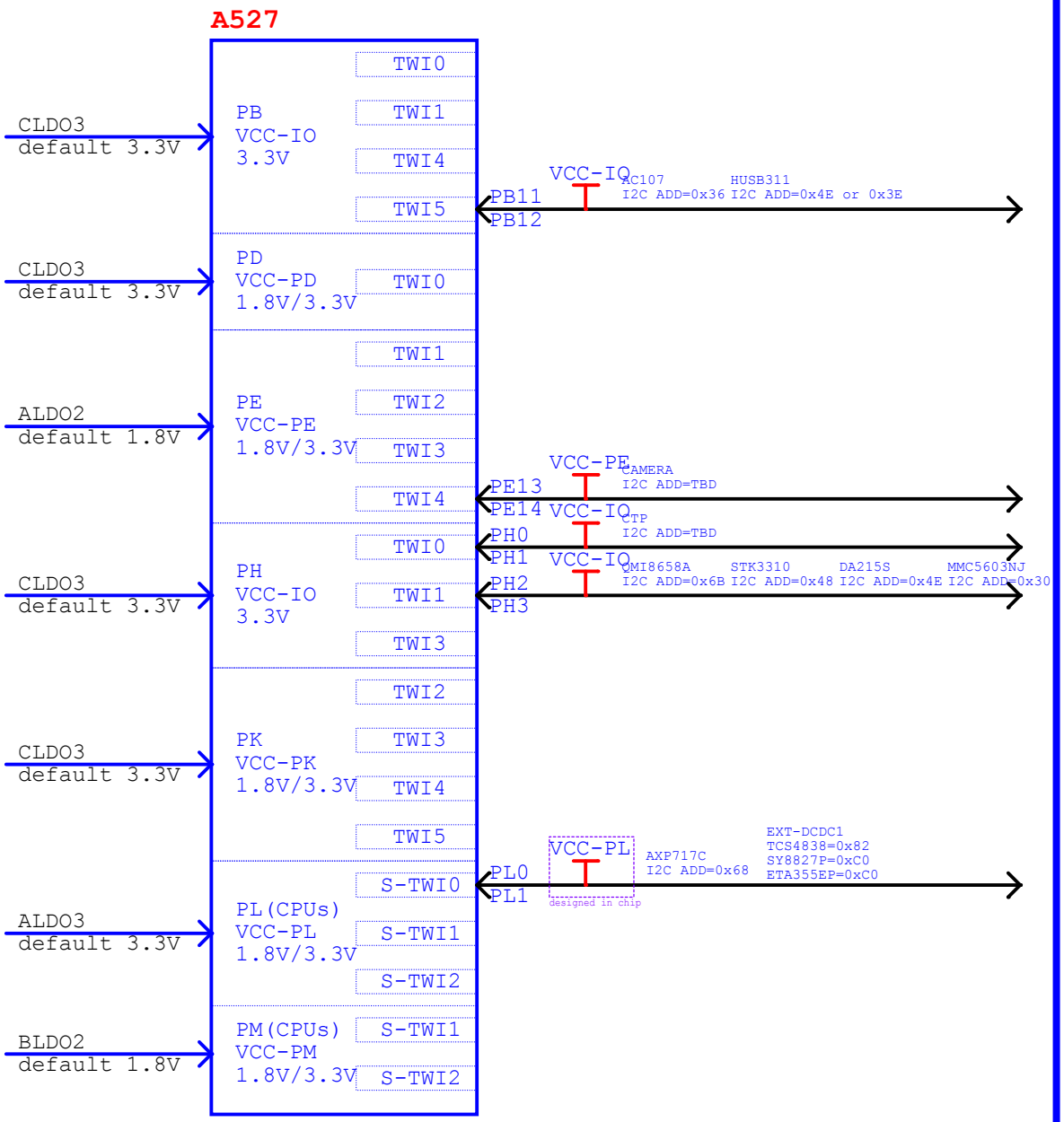

UART MAP

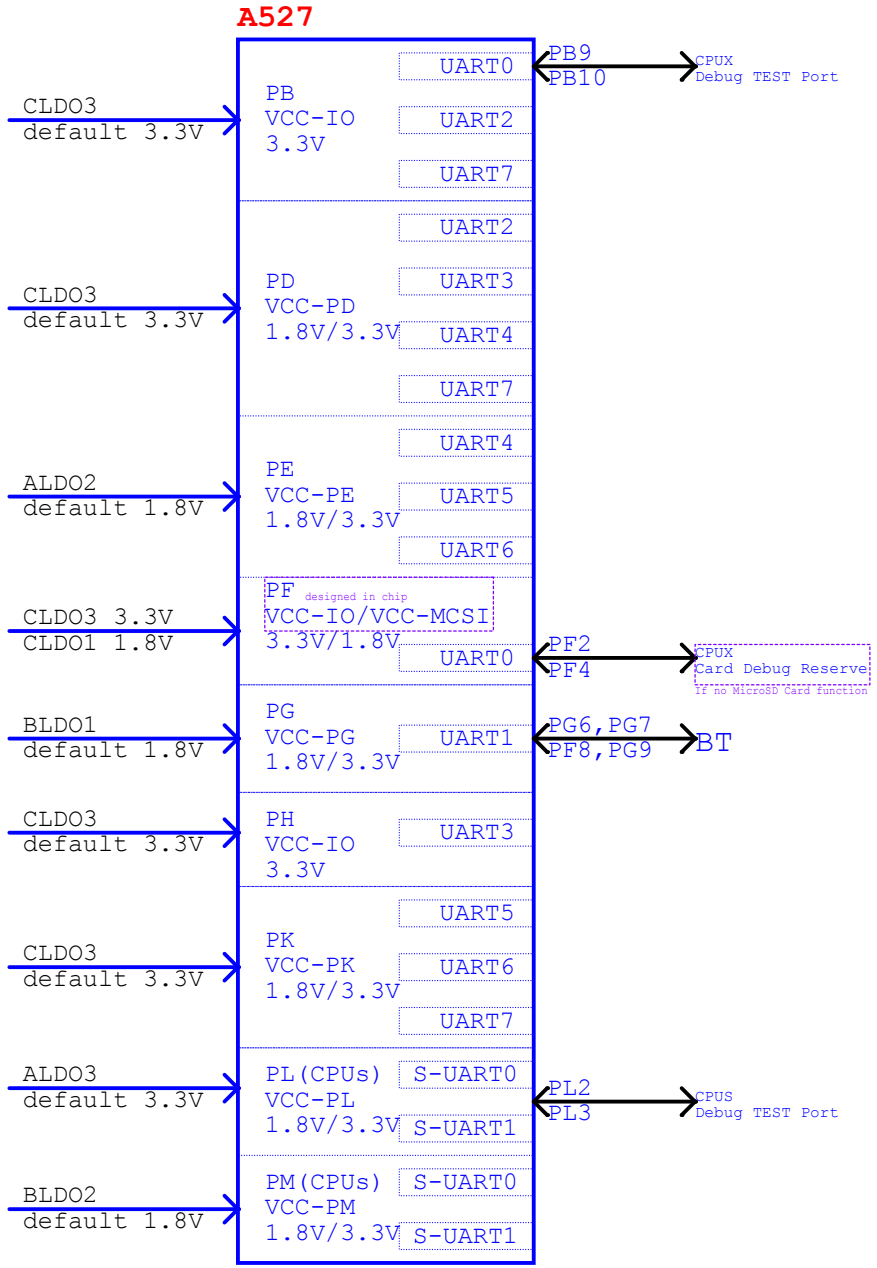

AllWinner Technology Co.,Ltd			
Design Name	A527-PRO2-AXP717C-LPDDR4-4X		
Size A3	Page Name 06 TWI&UART MAP		Rev
Date: Wednesday, July 05, 2023	Sheet 6 of 23		

BAT

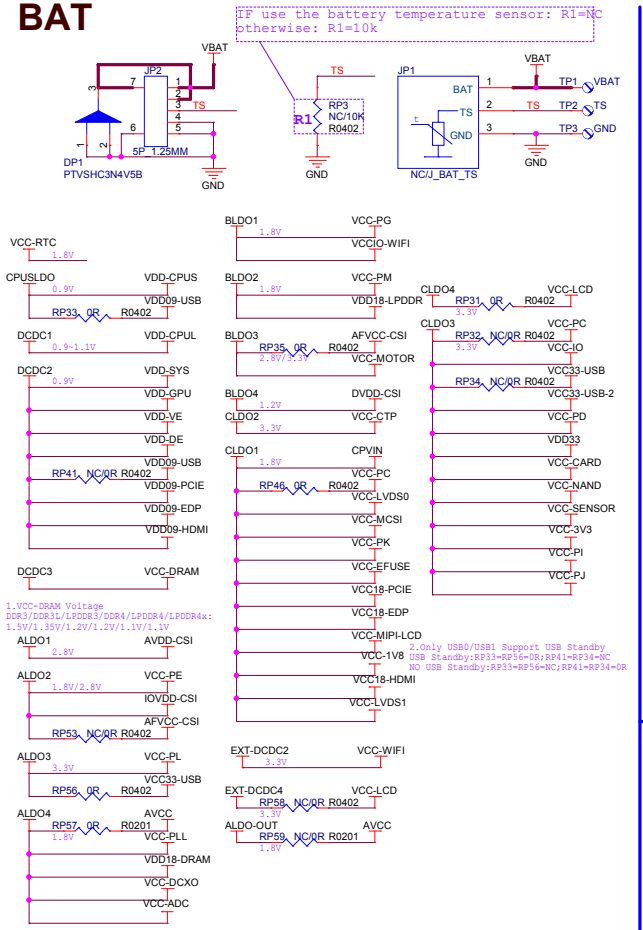

PMIC

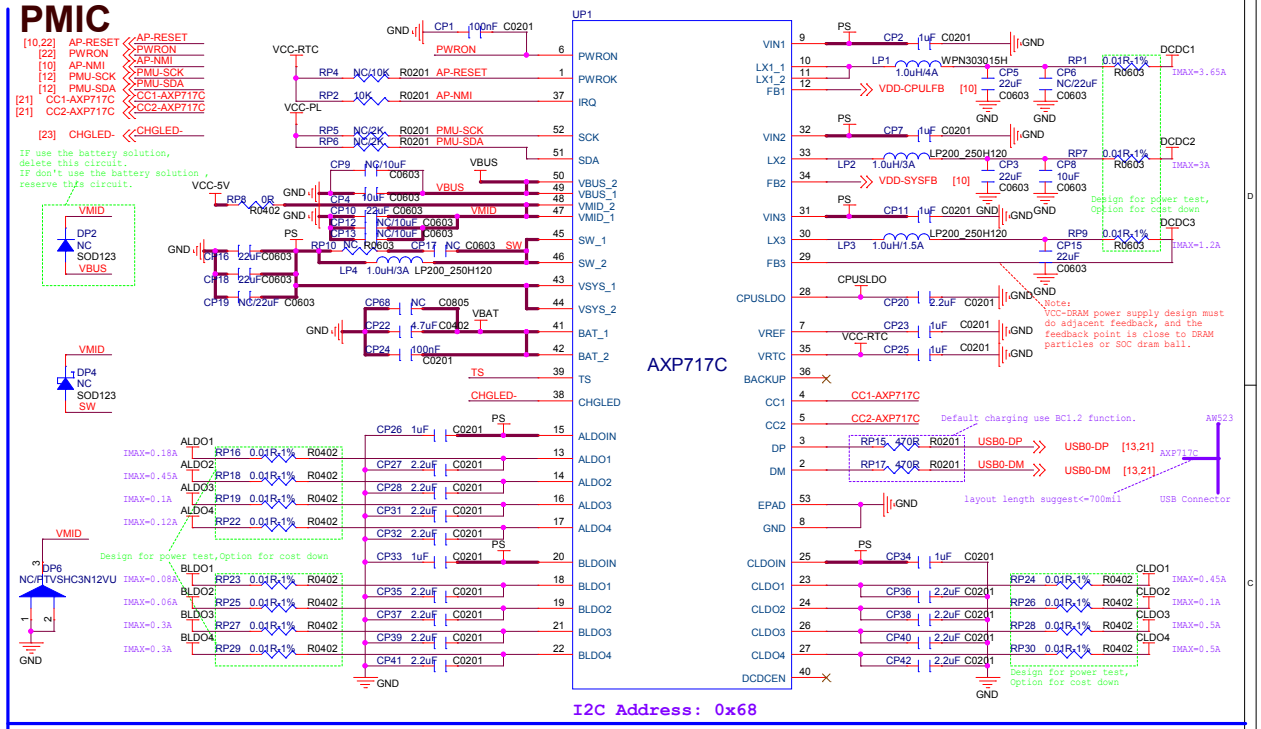

AXP323

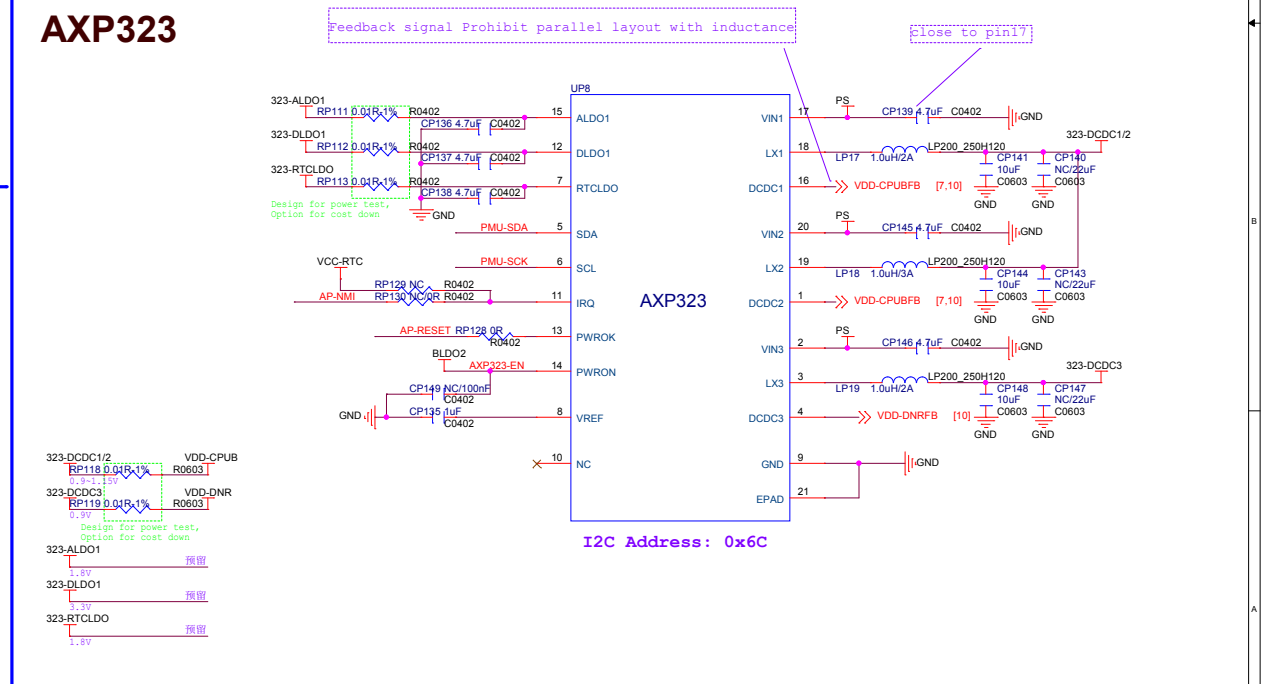

EXT DCDC

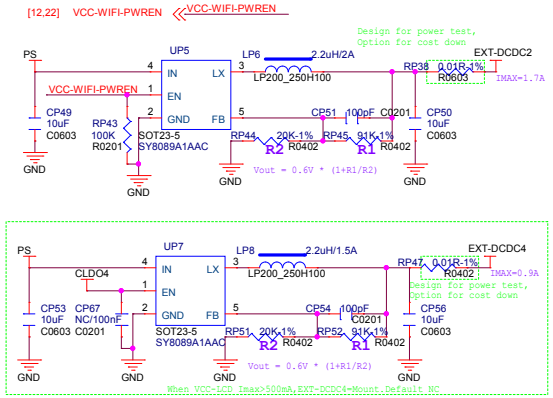

AllWinner Technology Co.,Ltd	
Design Name	A527-PRO2-AXP717C-LPDDR4-4X
Size: Custom	Page Name: 07 POWER-AXP717C+DCDC
Rev	
Date: Wednesday, July 05, 2023	Sheet 7 of 23

ACIN

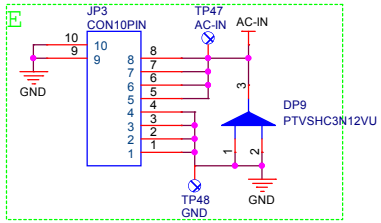

Default:
NOT ACIN and Solution 1,Support OVP

Circuit	ACIN	NOT ACIN,Support OVP
A	USE	NC
B	USE	NC
C	NC	NC
D	NC	USE
E	USE	NC

[12] USB-DRVVBUS — USB-DRVVBUS
[12,22] USB-VBUSDET — USB-VBUSDET
[12,22] ACIN-DET — ACIN-DET
[12,22] USB0-EN — USB0-EN
[11] OVP-INT — OVP-INT

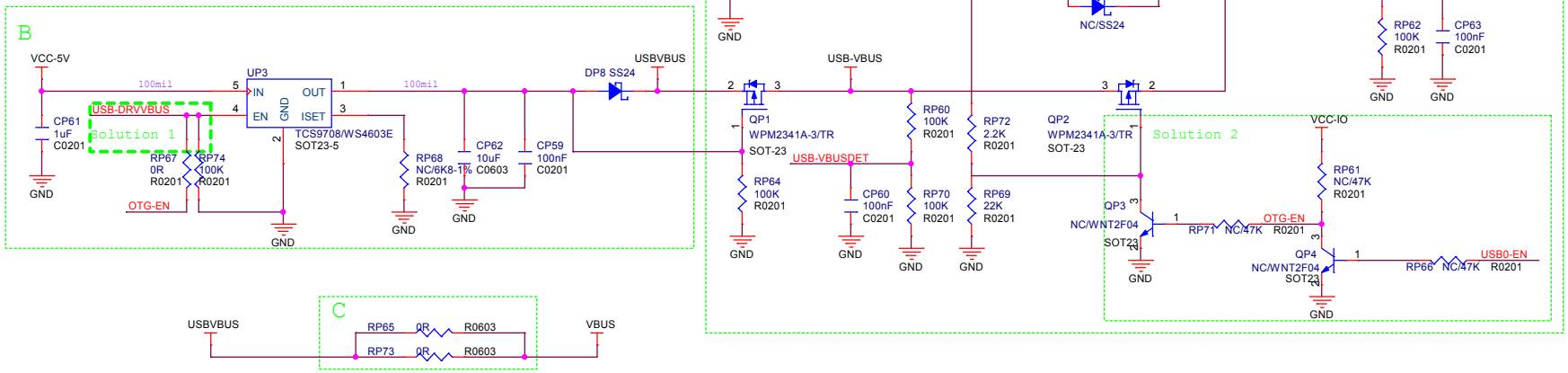

OVP

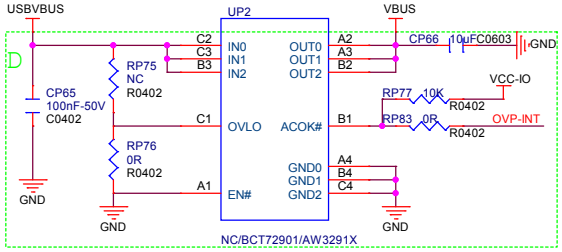

AllWinner Technology Co.,Ltd		
Design Name	A527-PRO2-AXP717C-LPDDR4-4X	
Size A3	Page Name 08 POWER-ACIN	Rev
Date: Wednesday, July 05, 2023	Sheet 8 of 23	

LPDDR4-4X

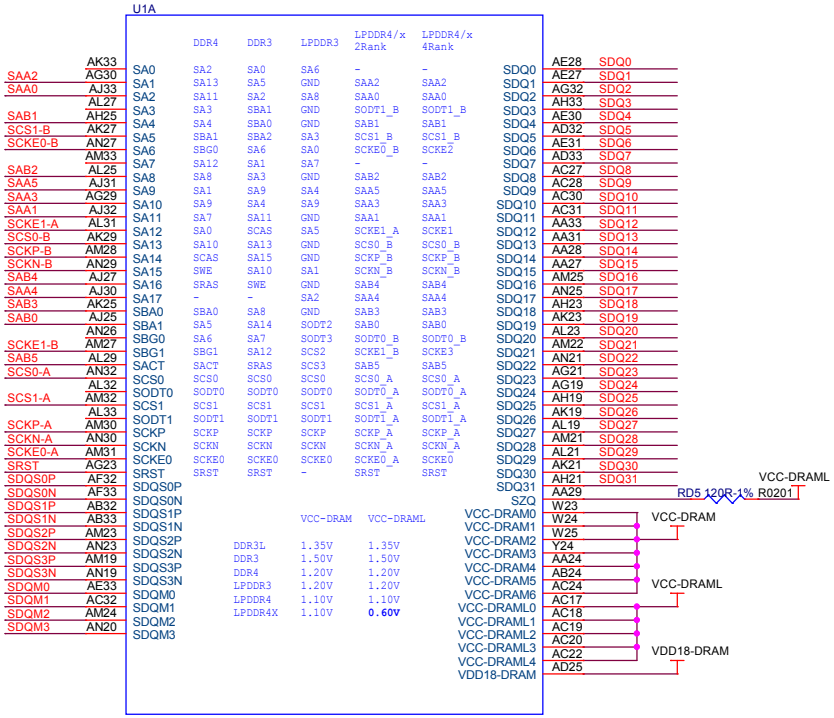

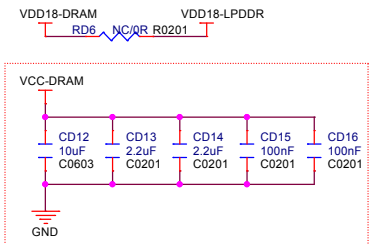

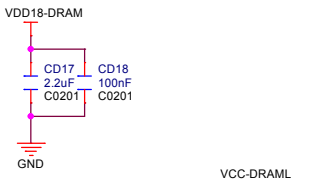

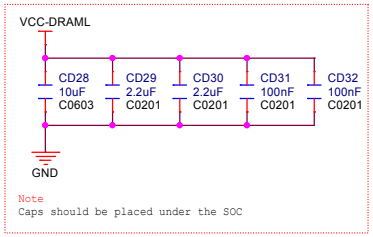

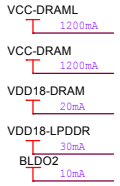

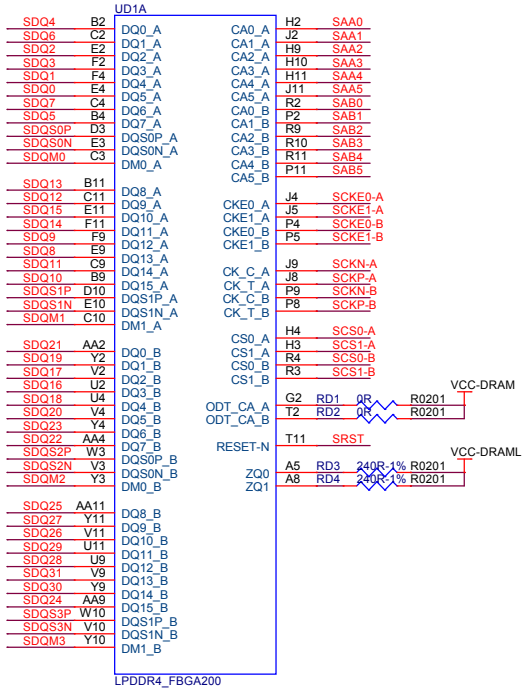

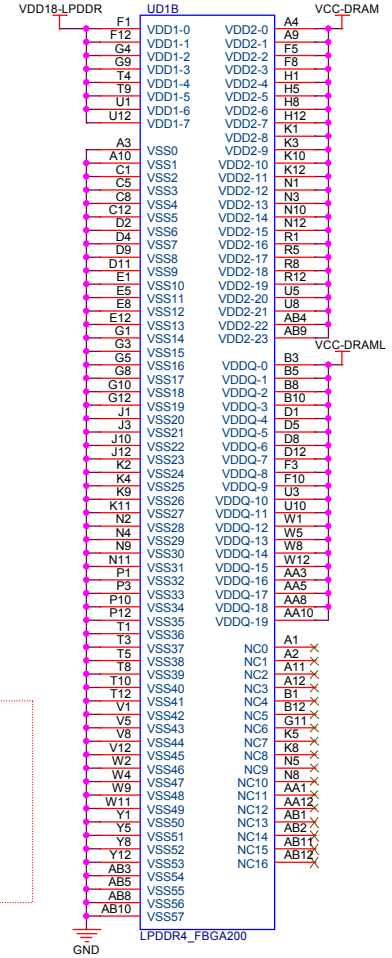

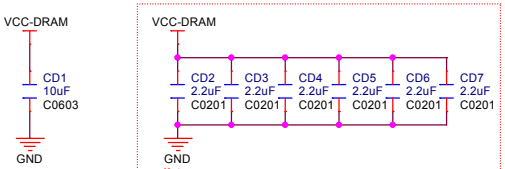

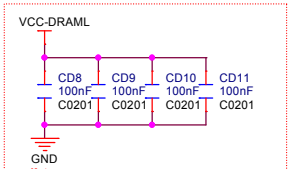

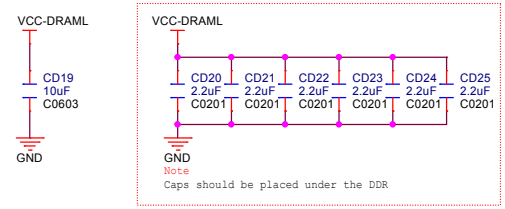

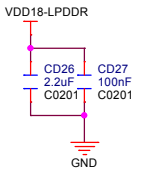

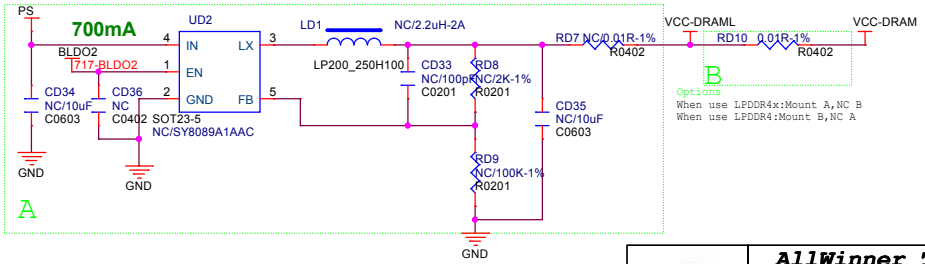

AllWinner Technology Co.,Ltd			
Design Name	A527-PRO2-AXP717C-LPDDR4-4X		
Size A3	Page Name 09 A527 DDR		Rev
Date: Thursday, July 06, 2023	Sheet 9 of 23		

SYS

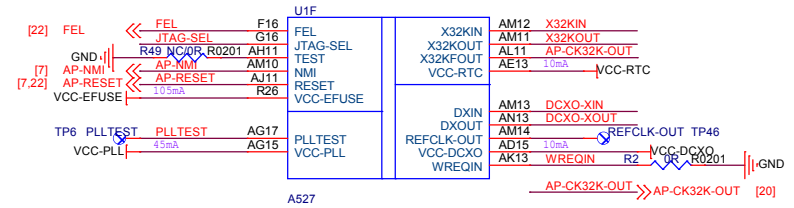

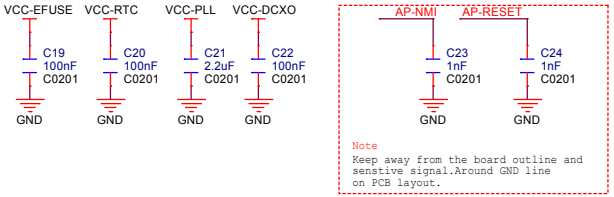

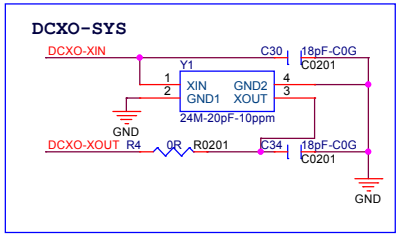

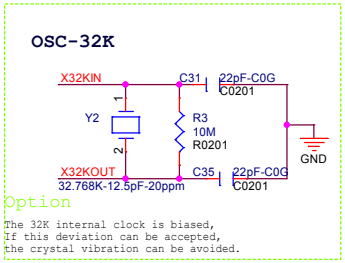

CORE POWER

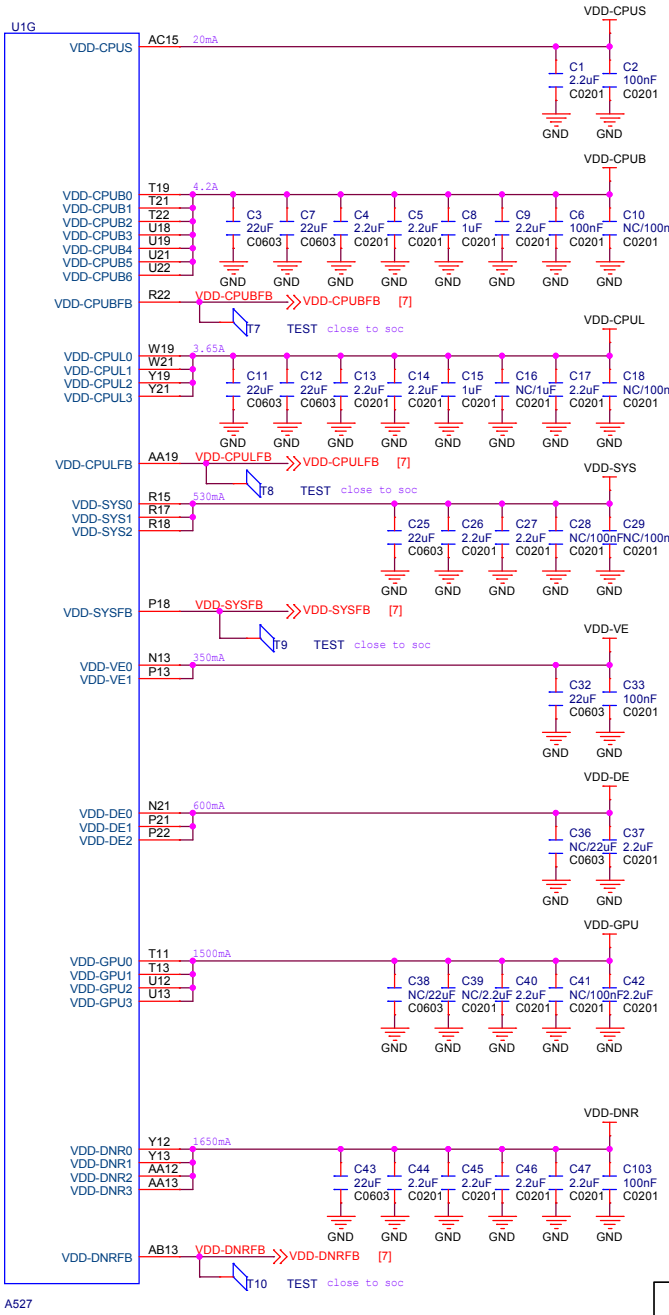

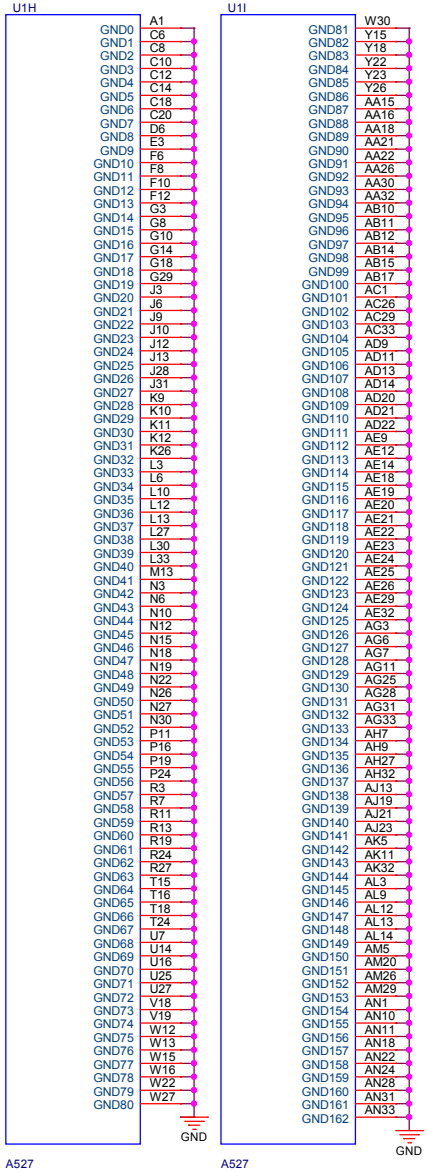

AllWinner Technology Co.,Ltd		
Design Name: A527-PRO2-AXP717C-LPDDR4-4X		
Size: A3	Page Name: 10 A527 SYS	Rev
Date: Wednesday, July 05, 2023	Sheet 10 of 23	

GPIO

GPIO use gide:
1.Note that the voltage of SOC GPIO must matches the external IO voltage.
2.The pull up voltage of the GPIO is selected to correspond to the power field voltage of GPIO.
3.Power current is PCB layout reference minimum.

AllWinner Technology Co.,Ltd			
Design Name	A527-PRO2-AXP717C-LPDDR4-4X		
Size A3	Page Name 11 A527 GPIO1		Rev
Date: Wednesday, July 05, 2023	Sheet 11 of 23		

GPIO

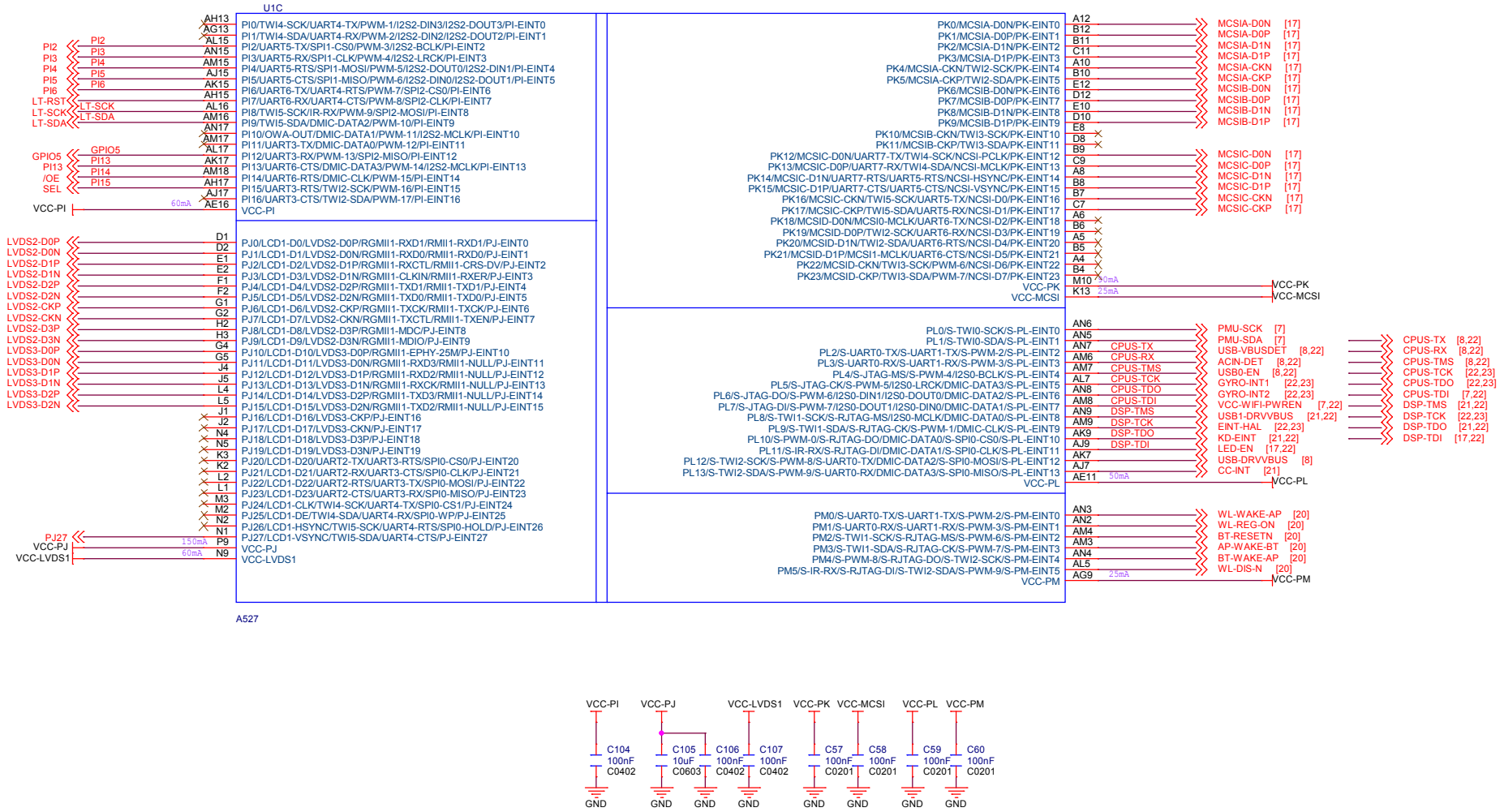

AllWinner Technology Co.,Ltd	
Design Name	A527-PRO2-AXP717C-LPDDR4-4X
Size A3	Page Name 12 A527 GPIO2
Rev	
Date: Wednesday, July 05, 2023	Sheet 12 of 23

Audio&ADC

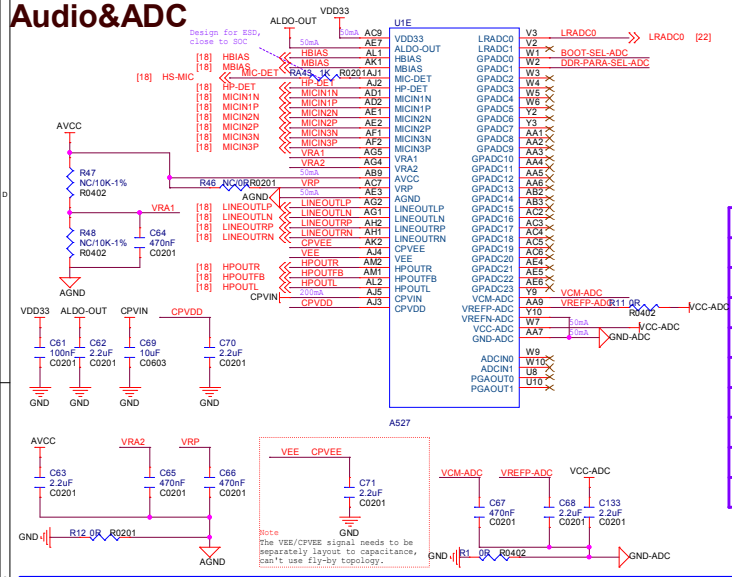

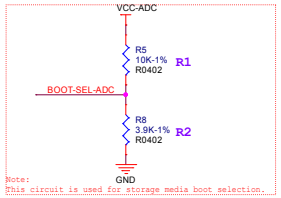

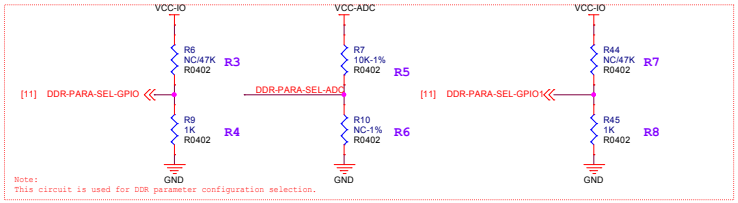

NO.	R1	R2	Boot Select type
1	NC	10K	SMHC0->MLC NAND->SLC NAND->try(except SPI in PJ)
2	10K	1K	SMHC0->SLC NAND->MLC NAND->try(except SPI in PJ)
3	10K	2K2	SMHC0->EMMC_USER->EMMC_BOOT->try(except SPI in PJ)
4	10K	3K9	SMHC0->EMMC_BOOT->EMMC_USER->try(except SPI in PJ)
5	6K8	4K7	SMHC0->SPI NOR->try(except SPI in PJ)
6	6K8	6K8	SMHC0->SPI NAND->try(except SPI in PJ)
7	4K3	6K8	SMHC0->SPI NOR in PJ->try
8	2K2	10K	SMHC0->SPI NAND in PJ->try
9	10K	NC	Reserved

try default order:(selected fail media will not try)
EMMC_USER->EMMC_BOOT->SLC NAND->MLC NAND->SPI NOR->SPI NAND

GPIO Level(Set by the R7 pull-up and R8 pull-down resistance of PH16 GPIO)	GPIO Level(Set by the R3 pull-up and R4 pull-down resistance of PH17 GPIO)	GPADC Voltage(Fixed pull-up R5 is 10K-1%,Set the voltage by adjusting pull-down resistor R6)	DDR PARA
0	0	163mV(1K-1%)	DDR PARA 0
0	0	382mV(2.7K-1%)	DDR PARA 1
0	0	608mV(5.1K-1%)	DDR PARA 2
0	0	811mV(8.2K-1%)	DDR PARA 3
0	0	1050mV(14K-1%)	DDR PARA 4
0	0	1315mV(27K-1%)	DDR PARA 5
0	0	1569mV(68K-1%)	DDR PARA 6
0	0	1800mV(NC)	DDR PARA 7
0	1	163mV(1K-1%)	DDR PARA 8
0	1	382mV(2.7K-1%)	DDR PARA 9
0	1	608mV(5.1K-1%)	DDR PARA 10
0	1	811mV(8.2K-1%)	DDR PARA 11
0	1	1050mV(14K-1%)	DDR PARA 12
0	1	1315mV(27K-1%)	DDR PARA 13
0	1	1569mV(68K-1%)	DDR PARA 14
0	1	1800mV(NC)	DDR PARA 15
1	0	163mV(1K-1%)	DDR PARA 16
1	0	382mV(2.7K-1%)	DDR PARA 17
1	0	608mV(5.1K-1%)	DDR PARA 18
1	0	811mV(8.2K-1%)	DDR PARA 19
1	0	1050mV(14K-1%)	DDR PARA 20
1	0	1315mV(27K-1%)	DDR PARA 21
1	0	1569mV(68K-1%)	DDR PARA 22
1	0	1800mV(NC)	DDR PARA 23
1	1	163mV(1K-1%)	DDR PARA 24
1	1	382mV(2.7K-1%)	DDR PARA 25
1	1	608mV(5.1K-1%)	DDR PARA 26
1	1	811mV(8.2K-1%)	DDR PARA 27
1	1	1050mV(14K-1%)	DDR PARA 28
1	1	1315mV(27K-1%)	DDR PARA 29
1	1	1569mV(68K-1%)	DDR PARA 30
1	1	1800mV(NC)	DDR PARA 31

USB&EDP&PCIE

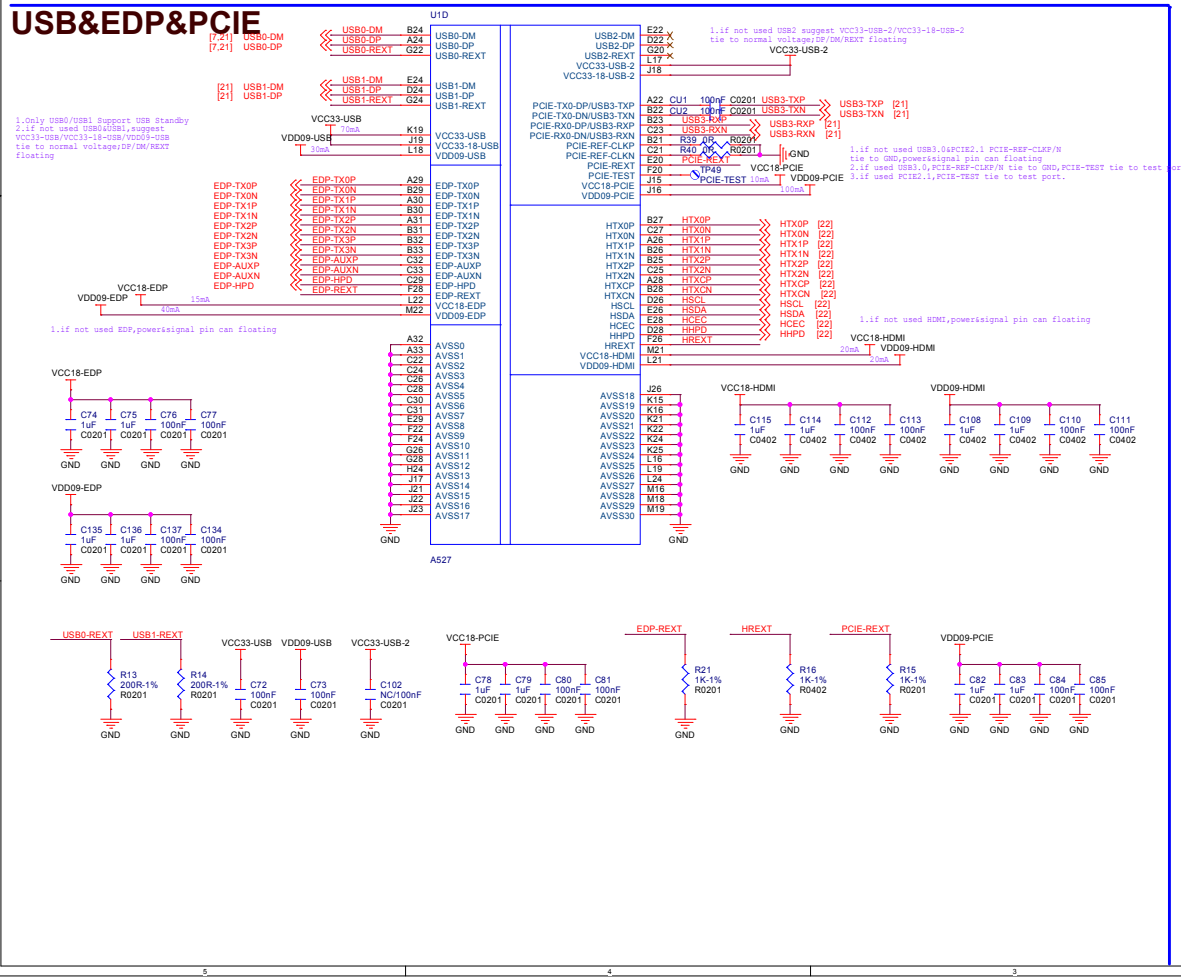

EMMC

Default:use EMMC

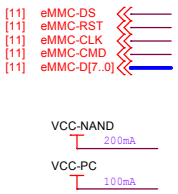

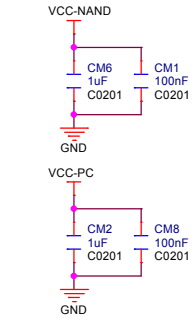

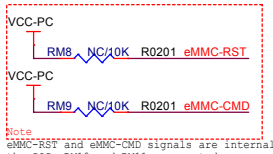

eMMC-RST and eMMC-CMD signals are internally pulled up in the SOC, RM10 and RM11 can cost down.

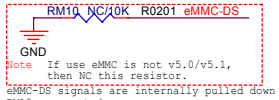

eMMC-DS signals are internally pulled down in the SOC, RM10 can cost down.

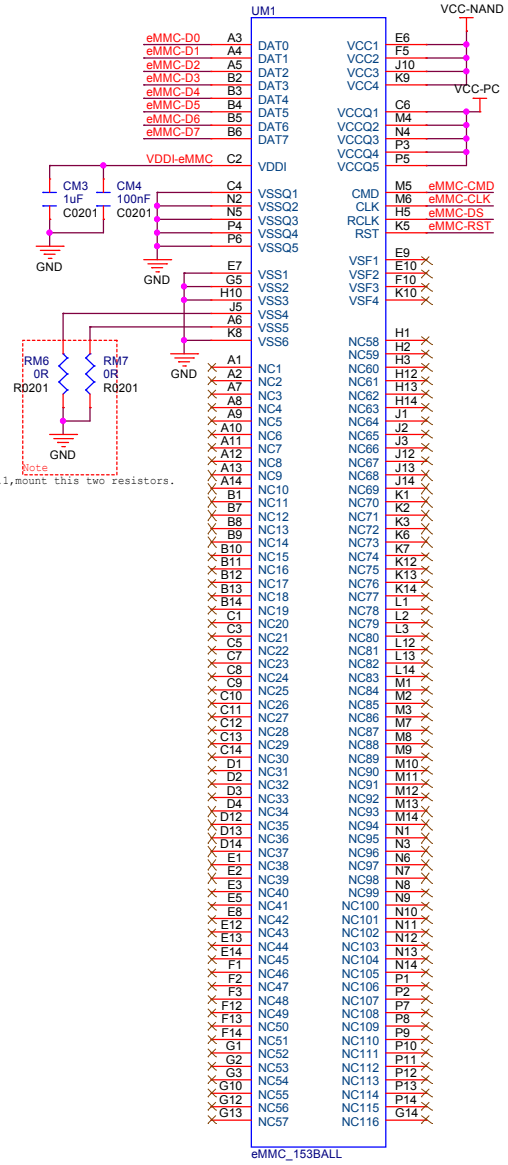

If eMMC is v5.0/v5.1,mount this two resistors.

AllWinner Technology Co.,Ltd			
Design Name	A527-PRO2-AXP717C-LPDDR4-4X		
Size A3	Page Name 14 EMMC		Rev
Date: Wednesday, July 05, 2023	Sheet 14 of 23		

LCD

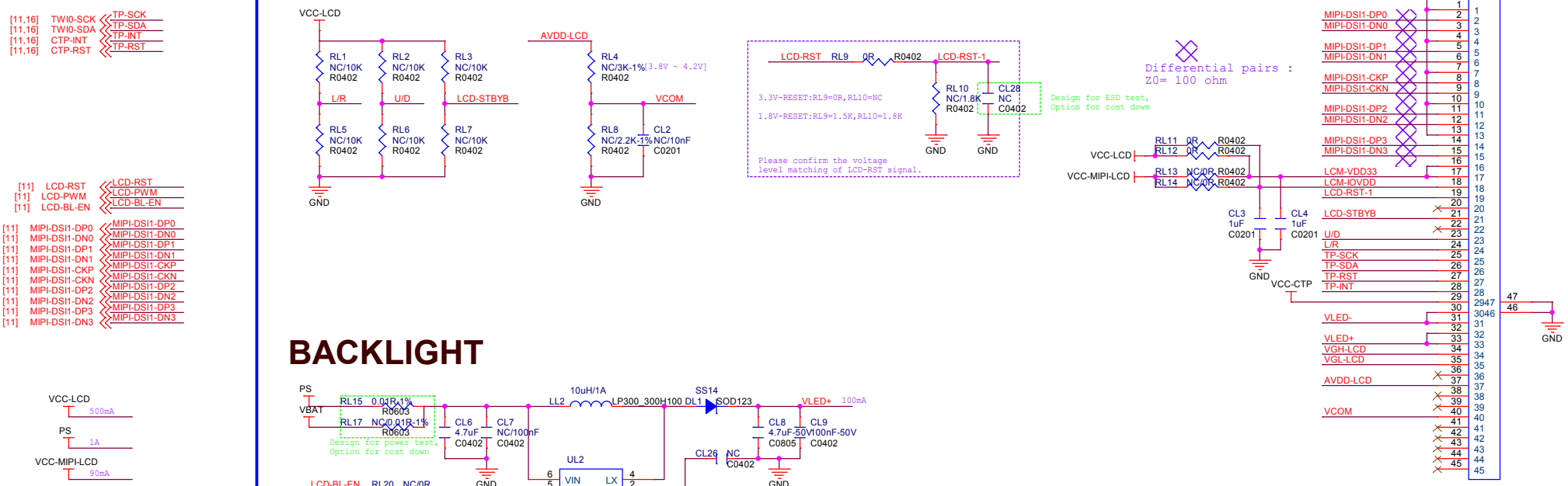

BACKLIGHT

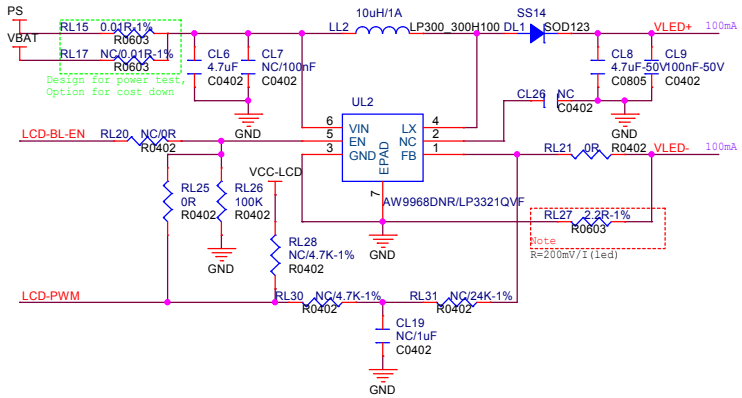

Default: SQ101D-Q5DI404-84H501(1200*1920)
Compatible 800*1280
设计软排线转接和兼容

LCD POWER For 800*1280

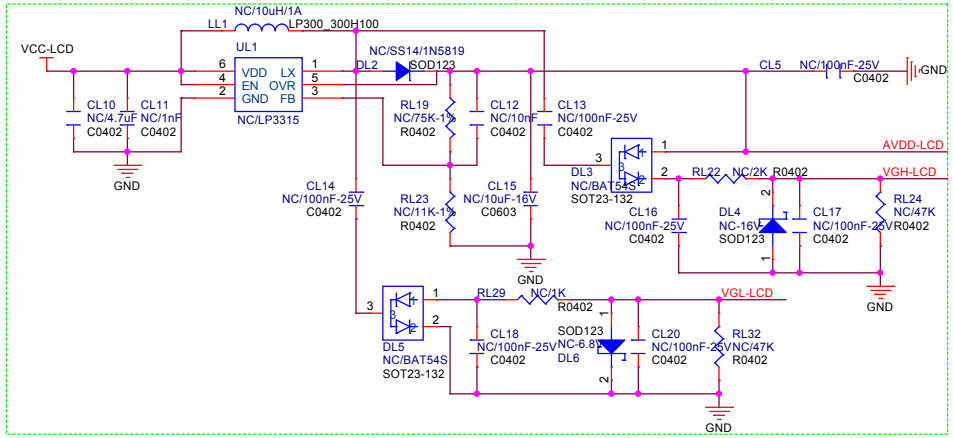

AllWinner Technology Co.,Ltd		
Design Name: A527-PRO2-AXP717C-LPDDR4-4X		
Size: A3	Page Name: 15 MIPI LCM	Rev
Date: Wednesday, July 05, 2023	Sheet 15 of 23	

CTP

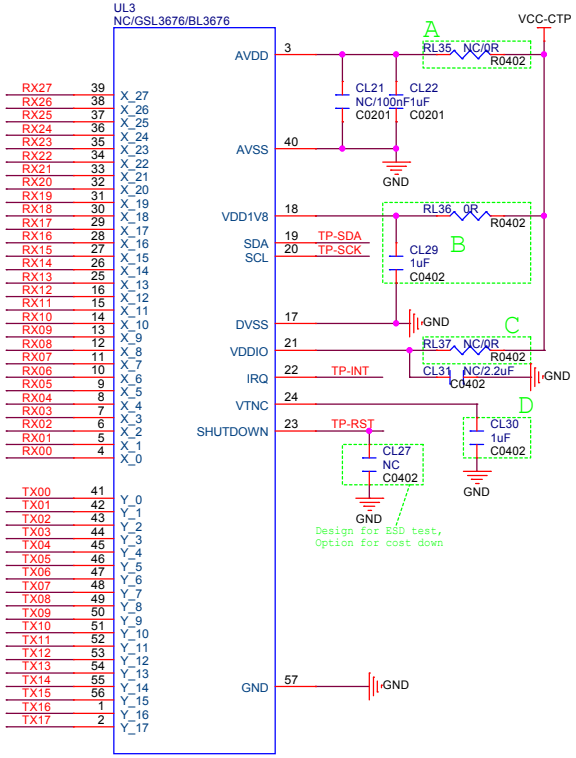

Default: GSL3676

Circuit	GSL3676	BL3676
A	0R	NC
B	NC	Mount
C	0R	NC
D	NC	1uF

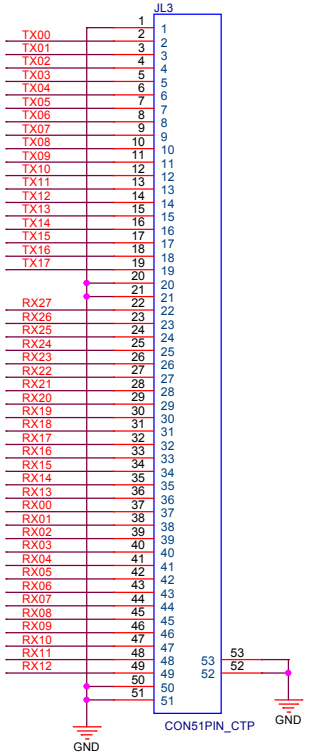

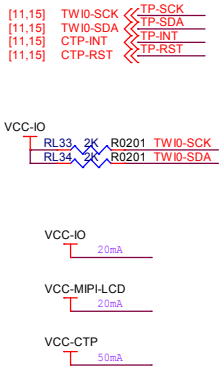

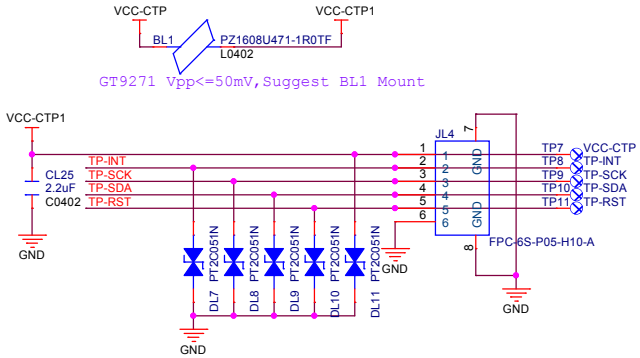

AllWinner Technology Co.,Ltd	
Design Name	A527-PRO2-AXP717C-LPDDR4-4X
Size A3	Page Name 16 CTP
Rev	
Date: Wednesday, July 05, 2023	Sheet 16 of 23

CAMERA

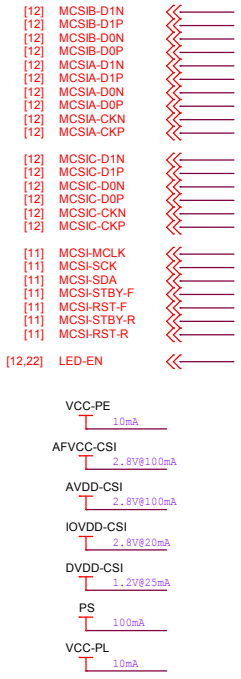

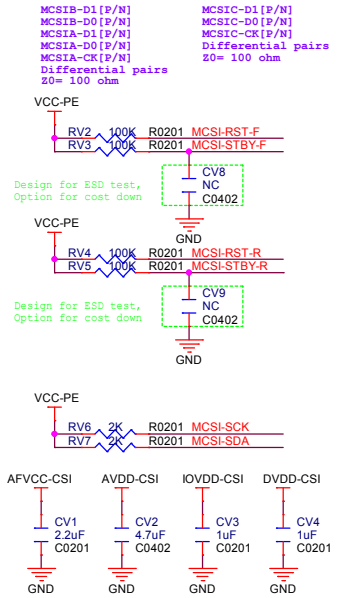

NOTE:

1.The working voltage and current of power need determine according to the peripheral specification.

2.AFVCC-CSI has timing requirements, don't share the same power with DOVDD-CSI.

3.The front and rear cameras need to consider the compatibility of DVDD-CSI voltage.

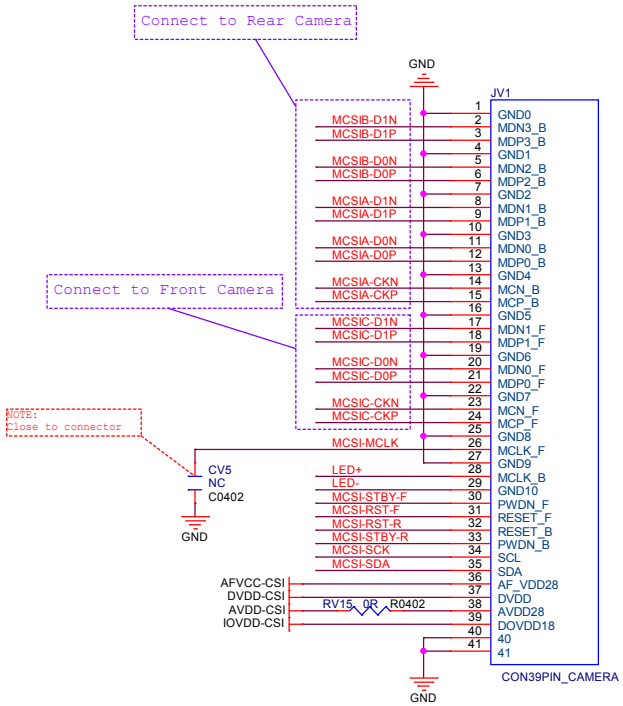

FLASH_LED

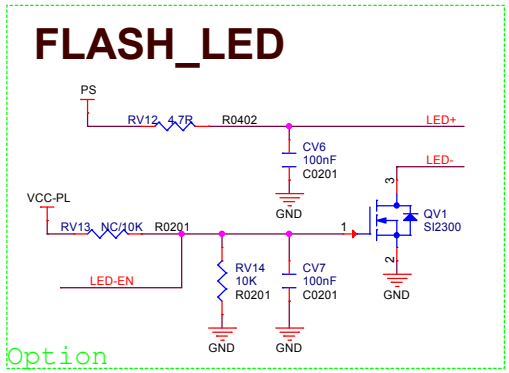

AllWinner Technology Co.,Ltd		
Design Name: A527-PRO2-AXP717C-LPDDR4-4X		
Size: A3	Page Name: 17 CAMERA	Rev
Date: Wednesday, July 05, 2023	Sheet 17 of 23	

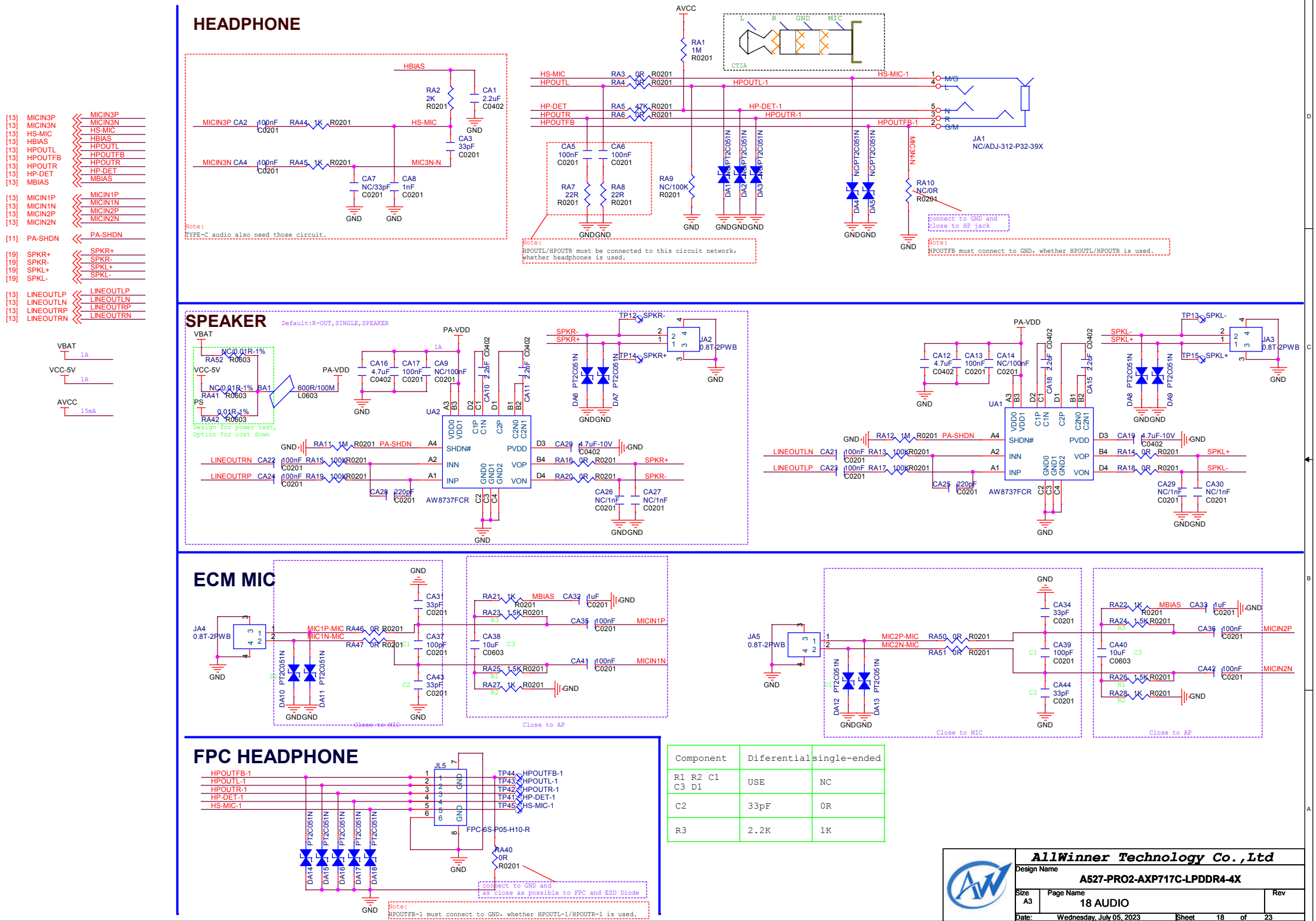

Component	Diferential	single-ended
R1 R2 C1 C3 D1	USE	NC
C2	33pF	0R
R3	2.2K	1K

AllWinner Technology Co.,Ltd	
Design Name	A527-PRO2-AXP717C-LPDDR4-4X
Size A3	Page Name 18 AUDIO
Rev	
Date: Wednesday, July 05, 2023	Sheet 18 of 23

Default:Use AC107

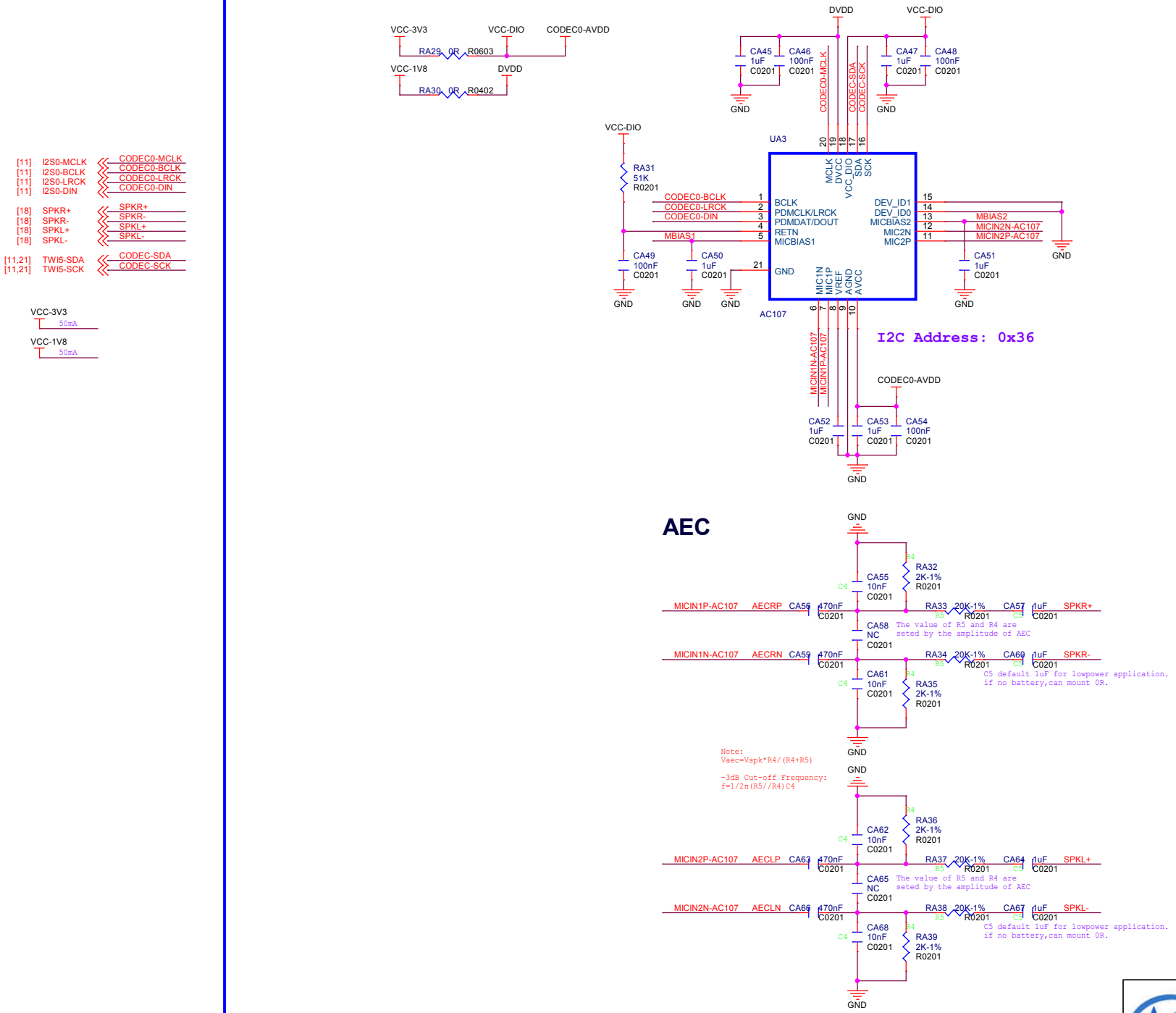

AllWinner Technology Co.,Ltd	
Design Name	A527-PRO2-AXP717C-LPDDR4-4X
Size A3	Page Name 19 AUDIO AC107
Rev	
Date: Wednesday, July 05, 2023	Sheet 19 of 23

WiFi-BT 2T/2R

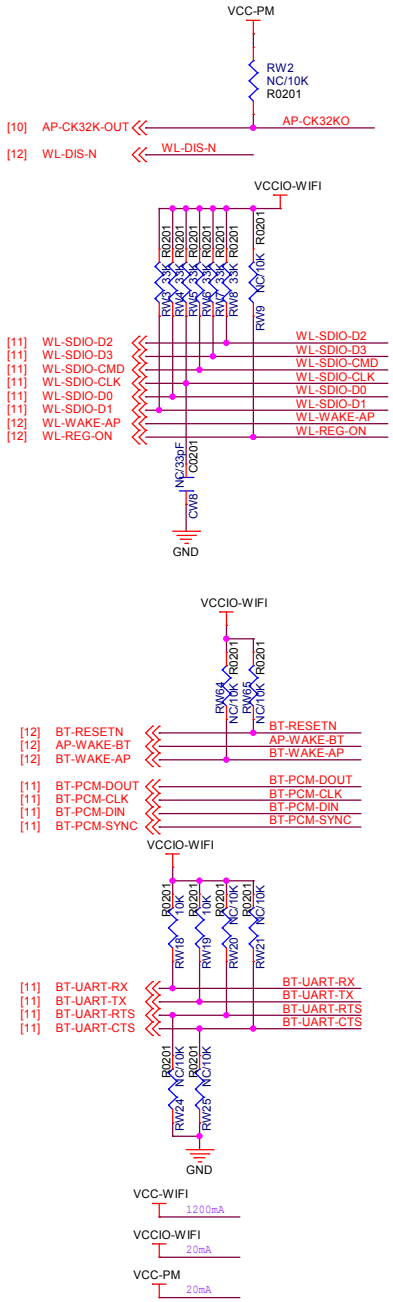

Model	Specifications	VCC-WIFI	VCCIO-WIFI
RTL8852BS	2.4G&5G,WiFi6,80MHz, BT5.2	3.3V@xxxmA	1.8V@xxxmA
AP6398S	2.4G&5G,WiFi6,80MHz, BT5.0	3.3V@1.2A	1.8V@20mA

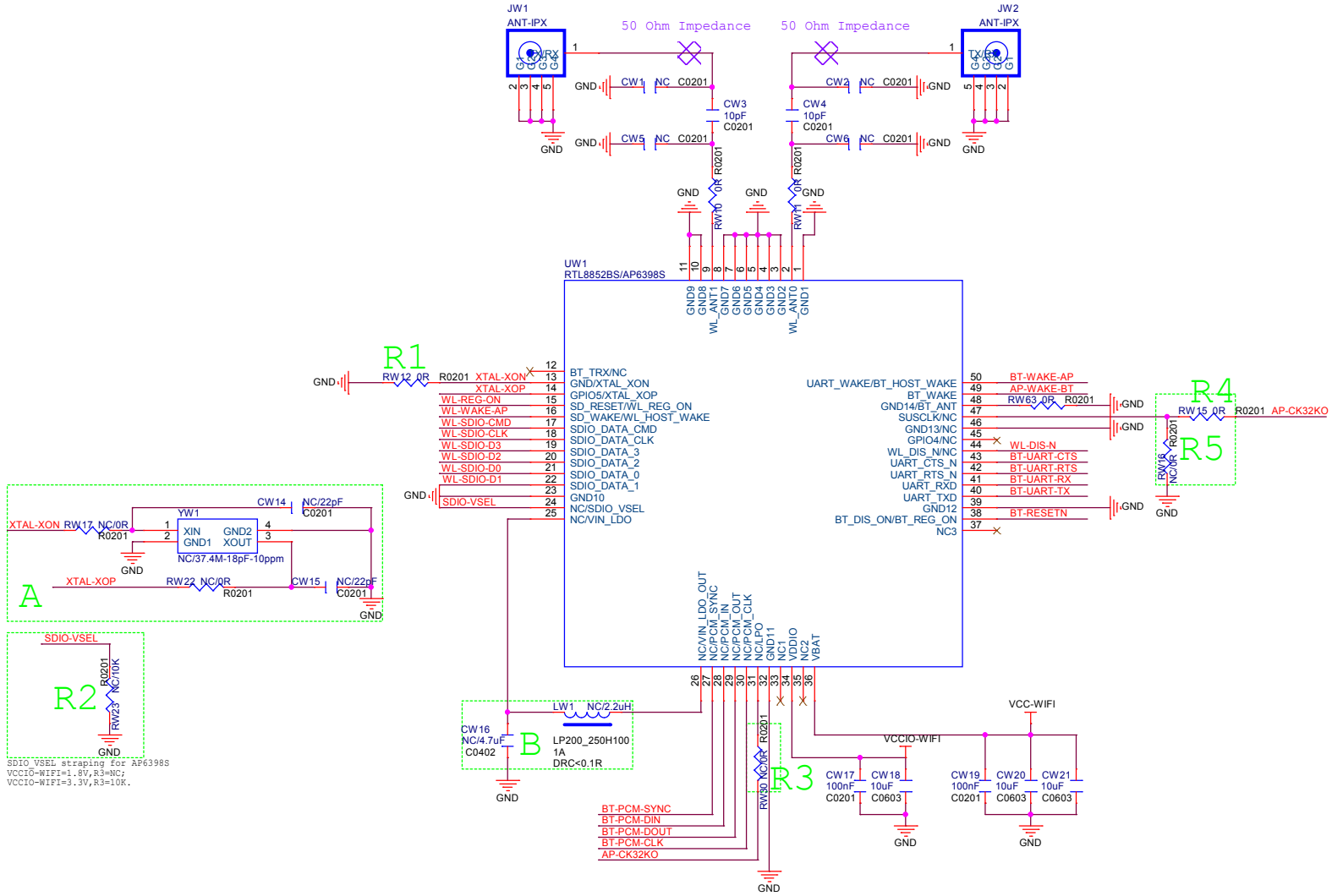

Model	A	B	R1	R2	R3	R4	R5
RTL8852BS	NC	NC	0R	NC	NC	0R	NC
AP6398S	Mount	Mount	NC	NC	0R	NC	0R

AllWinner Technology Co.,Ltd

Design Name: A527-PRO2-AXP717C-LPDDR4-4X

Size: A3 | Page Name: 20 WIFI/BT RTL8852BS | Rev

Date: Wednesday, July 05, 2023 | Sheet 20 of 23

USB3.0 HOST&USB2.0 OTG

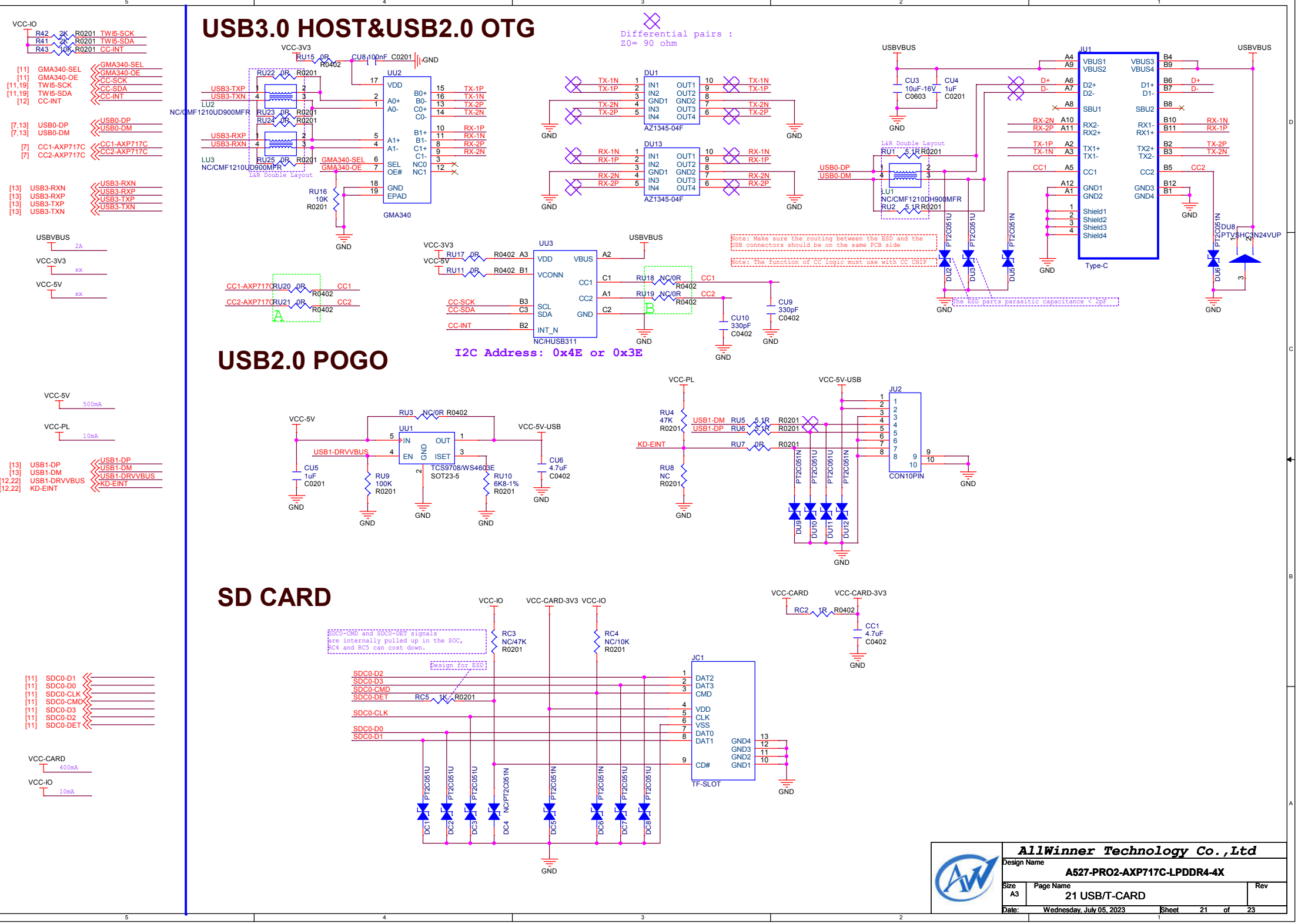

USB2.0 POGO

SD CARD

AllWinner Technology Co.,Ltd			
Design Name	A527-PRO2-AXP717C-LPDDR4-4X		
Size A3	Page Name 21 USB/T-CARD		Rev
Date: Wednesday, July 05, 2023	Sheet 21 of 23		

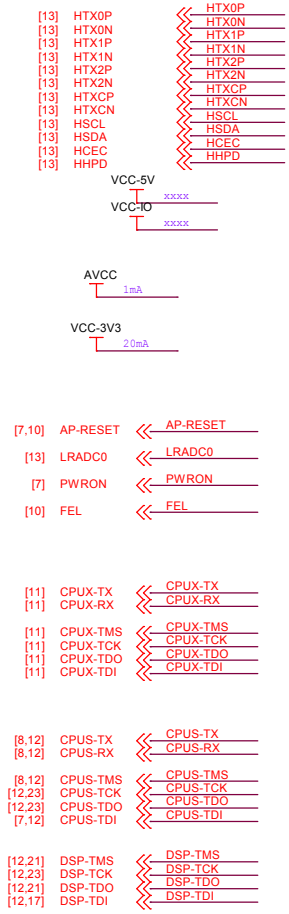

KEY

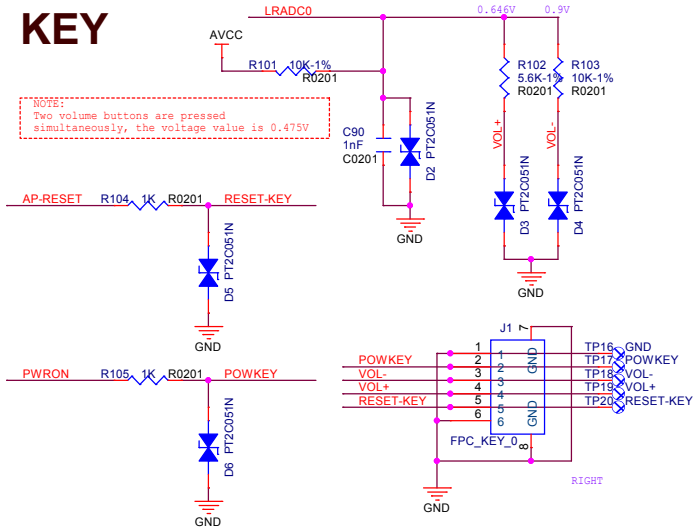

HDMI

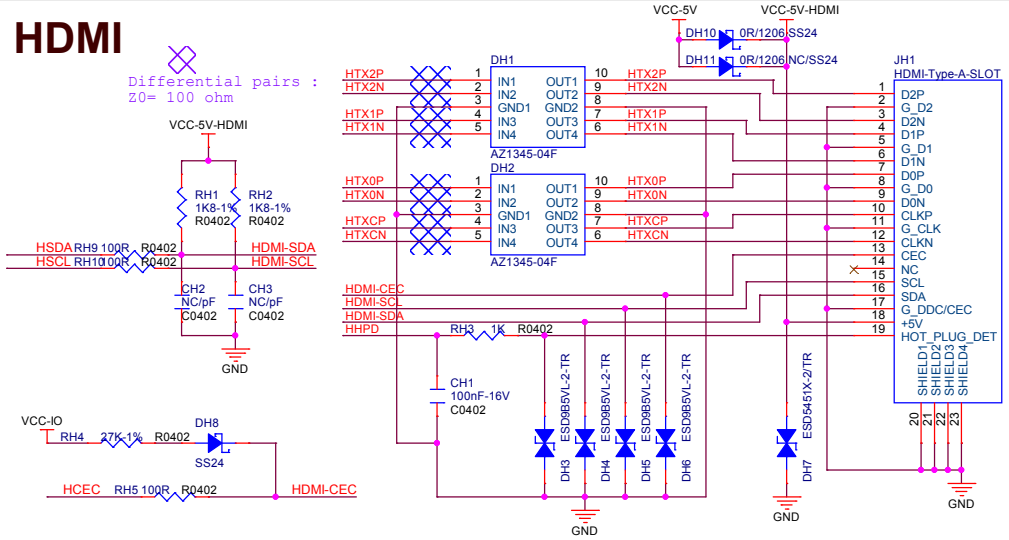

SHIELD

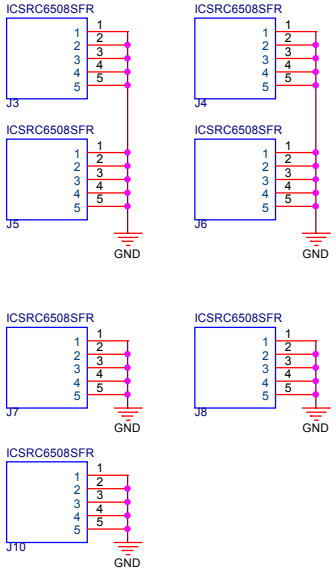

CPUX DEBUG

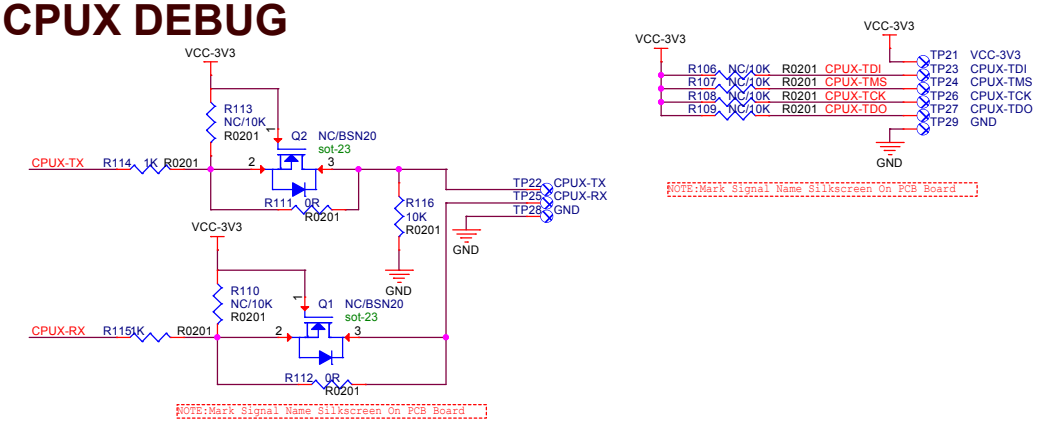

CPUS DEBUG

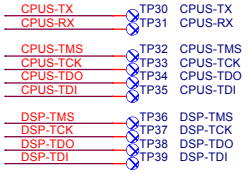

FEL

MARK POINT

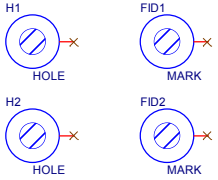

AllWinner Technology Co.,Ltd	
Design Name	A527-PRO2-AXP717C-LPDDR4-4X
Size A3	Page Name 22 KEY/DEBUG/HDMI
Rev	
Date: Wednesday, July 05, 2023	Sheet 22 of 23

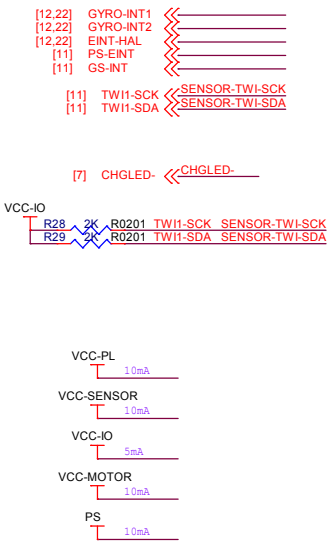

Gyroscope

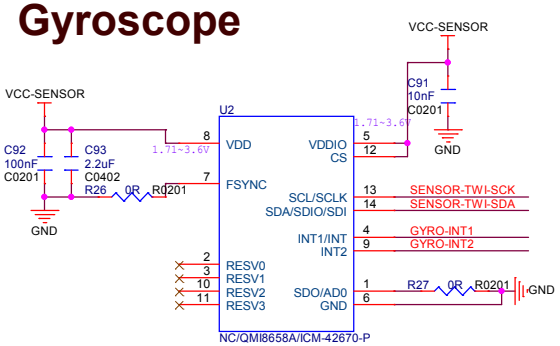

QMI8658A I2C Address: 0x6B
ICM-42670-P I2C Address: 0x68

Hall switch

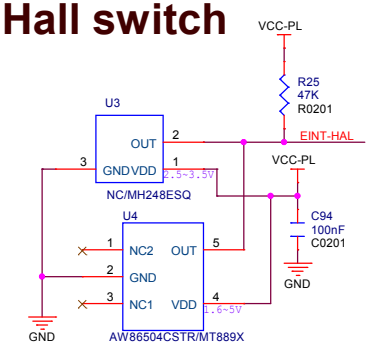

Magnetometer

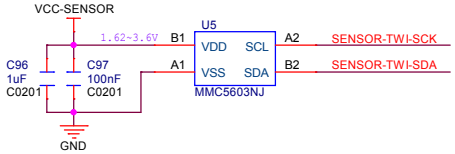

MMC5603NJ:1.62~3.6V I2C Address=0x30
AK09918C:1.65~1.95V I2C Address=0x0C

Note:AK09918C need use 1.8V POWER&I2C

ALS Sensor

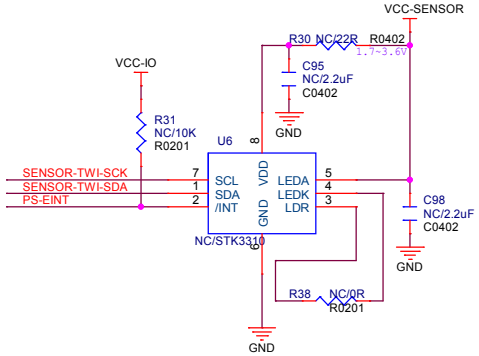

STK3310 I2C Address: 0x48

3axis G-sensor

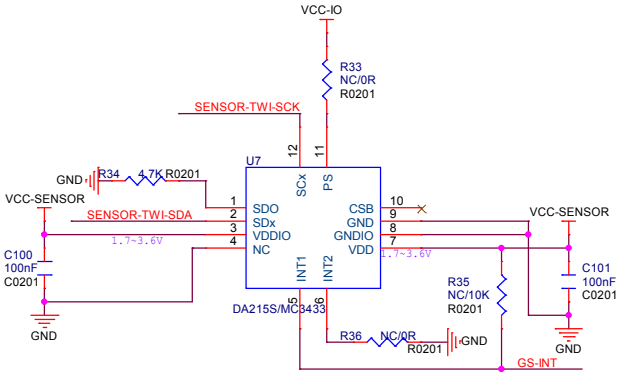

DA215S I2C Address: 0x4E
MC3433 I2C Address: 0x19

Motor

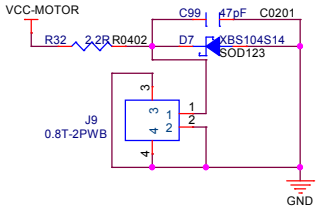

CHLED

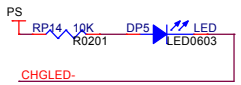

AllWinner Technology Co.,Ltd		
Design Name: A527-PRO2-AXP717C-LPDDR4-4X		
Size: A3	Page Name: 23 Sensor	Rev
Date: Wednesday, July 05, 2023	Sheet 23 of 23	