VERSION HISTORY

Index:

Page1 01 VERSION HISTORY
Page2 02 BLOCK DIAGRAM
Page3 03 POWER TREE
Page4 04 POWER SEQUENCE
Page5 05 GPIO ASSIGNMENT
Page6 06 TWI&UART MAP
Page7 07 POWER-AXP717C+DCDC
Page8 08 POWER-ACIN
Page9 09 A527 DDR
Page10 10 A527 SYS
Page11 11 A527 GPIO1
Page12 12 A527 GPIO2
Page13 13 A527 Analog&High-speed
Page14 14 EMMC
Page15 15 MIPI LCM
Page16 16 EDP LCM
Page17 17 CTP
Page18 18 CAMERA
Page19 19 AUDIO
Page20 20 AUDIO AC107
Page21 21 WIFI/BT AW869X
Page22 22 USB/T-CARD
Page23 23 KEY/DEBUG/HDMI OUT
Page24 24 ETHERNET
Page25 25 TypeC DP IN
Page26 26 HDMI IN
Page27 27 Sensor

Revision	Description	Date
Ver 0.9	Initial	2022-12-2
Ver 0.91	Modify	2023-02-08
Ver 1.0	Rlease	2023-11-30
Ver 1.1	Add TypeC DP OUT、 Reserved VE separately power etc.	2024-05-07
Ver 1.2	Add VCC-MCSI note. Modify RP320 note.	2024-06-12
Ver 1.3	Modify HUSB311 circuit、RA40 connect.	2024-07-12

Index(OPTION):

Page03 03 POWER TREE
Page07 07 POWER-AXP717B-AXP323
Page07-107-1 POWER-AXP717C_2S lion
Page07-207-2 Quick Charger_2S lion
Page08 08 Quick Charger_1S lion
Page15 15 RGB-VGA
Page16 16 EDP LCM 2LANE
Page19 19 TYPEC DP/Analog AUDIO
Page19-119-1 MEMS AMIC/Digital PA
Page21 21 WIFI/BT 2T/2R
Page21-121-1 WIFI/BT PCIE AP6275P
Page22 22 USB-DPIN/T-CARD
Page24 24 ETHERNET-PH

Description

Note

Option

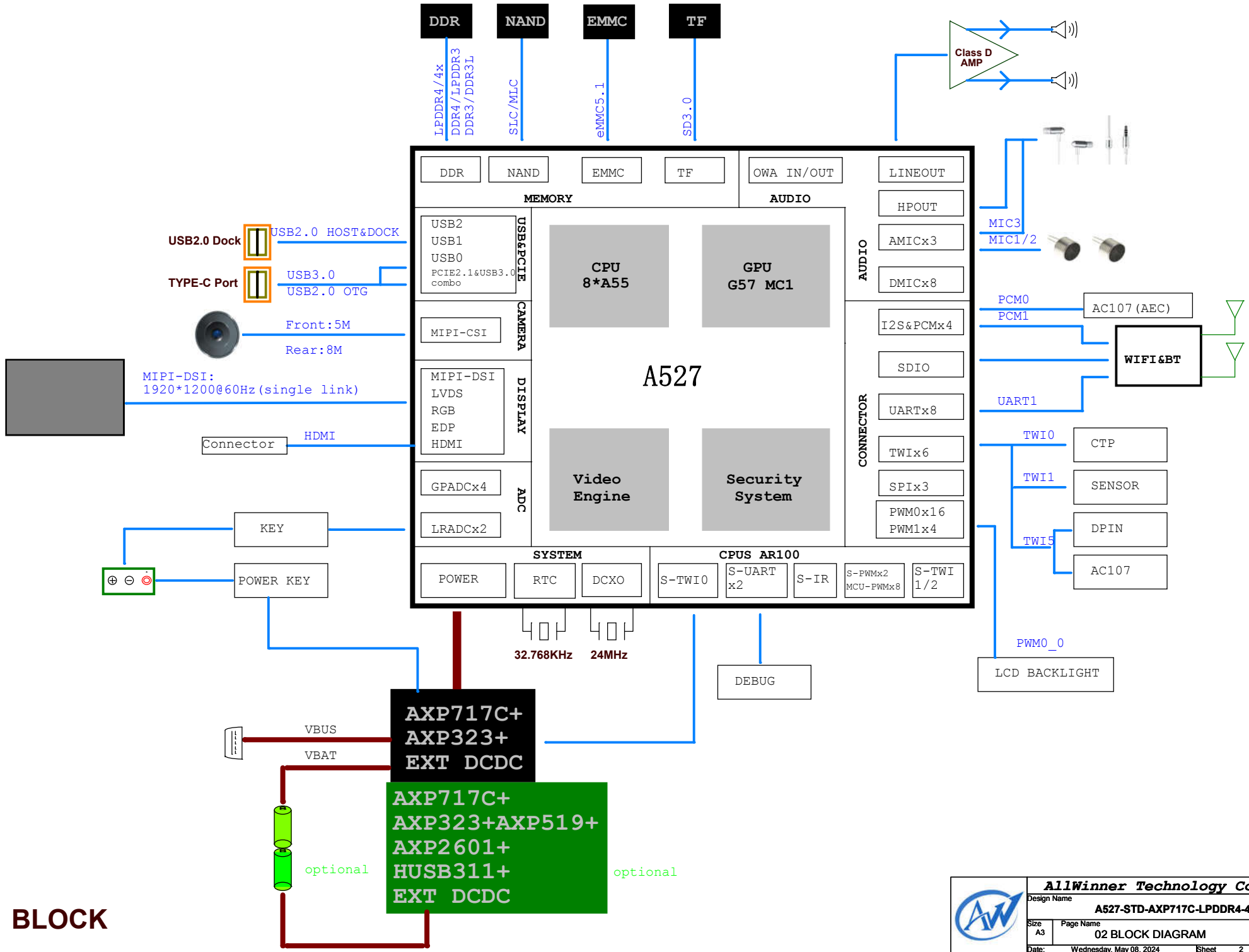

AllWinner Technology Co.,Ltd

Design Name: A527-STD-AXP717C-LPDDR4-4X-32X1

Size: A3 | Page Name: 02 BLOCK DIAGRAM | Rev

Date: Wednesday, May 08, 2024 | Sheet 2 of 27

POWER TREE

DEFAULT POWER ON

DEFAULT POWER OFF

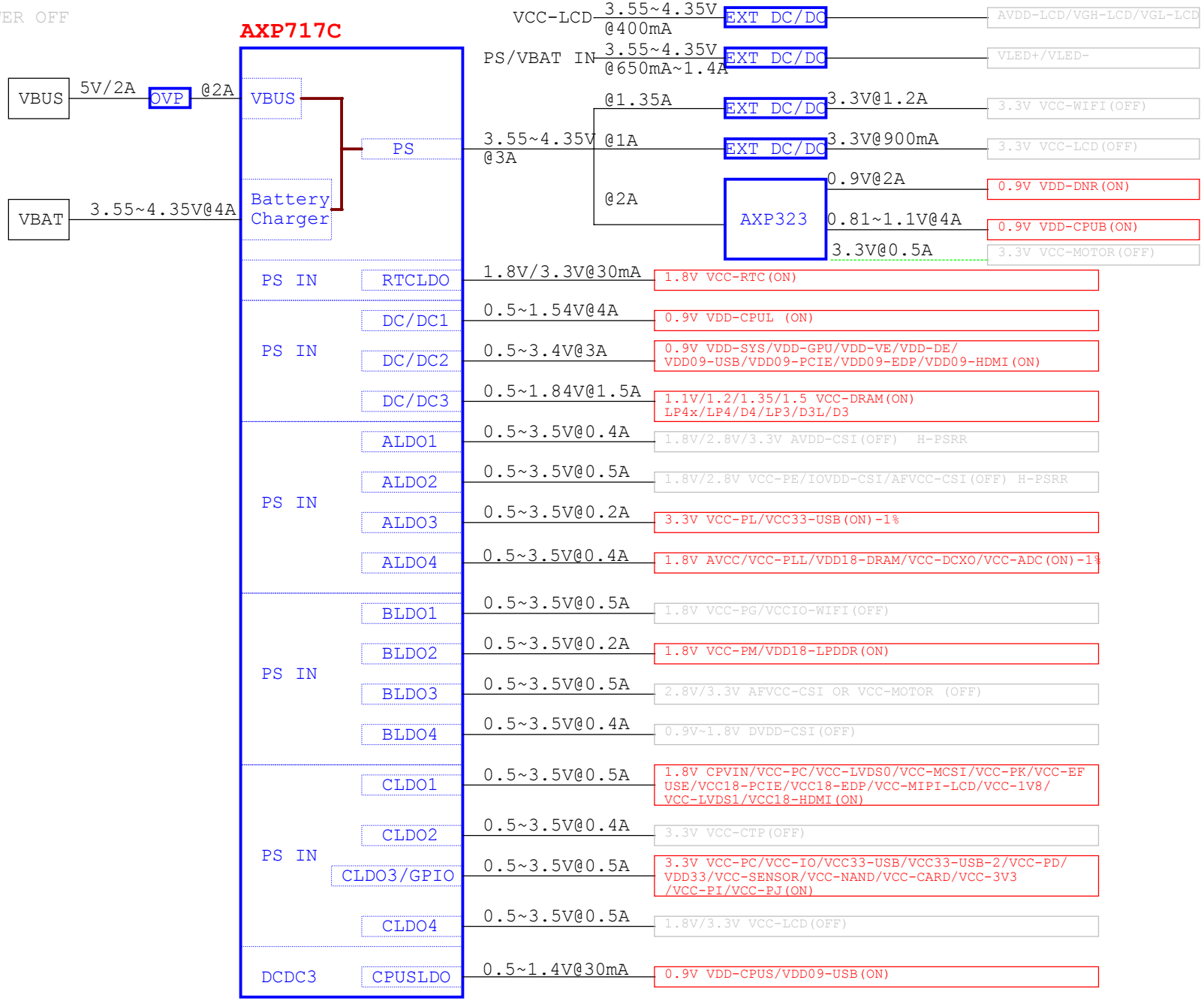

AllWinner Technology Co.,Ltd	
Design Name	A527-STD-AXP717C-LPDDR4-4X-32X1
Size A3	Page Name 03 POWER TREE
Rev	
Date: Wednesday, May 08, 2024	Sheet 3 of 27

POWER TREE

DEFAULT POWER ON

DEFAULT POWER OFF

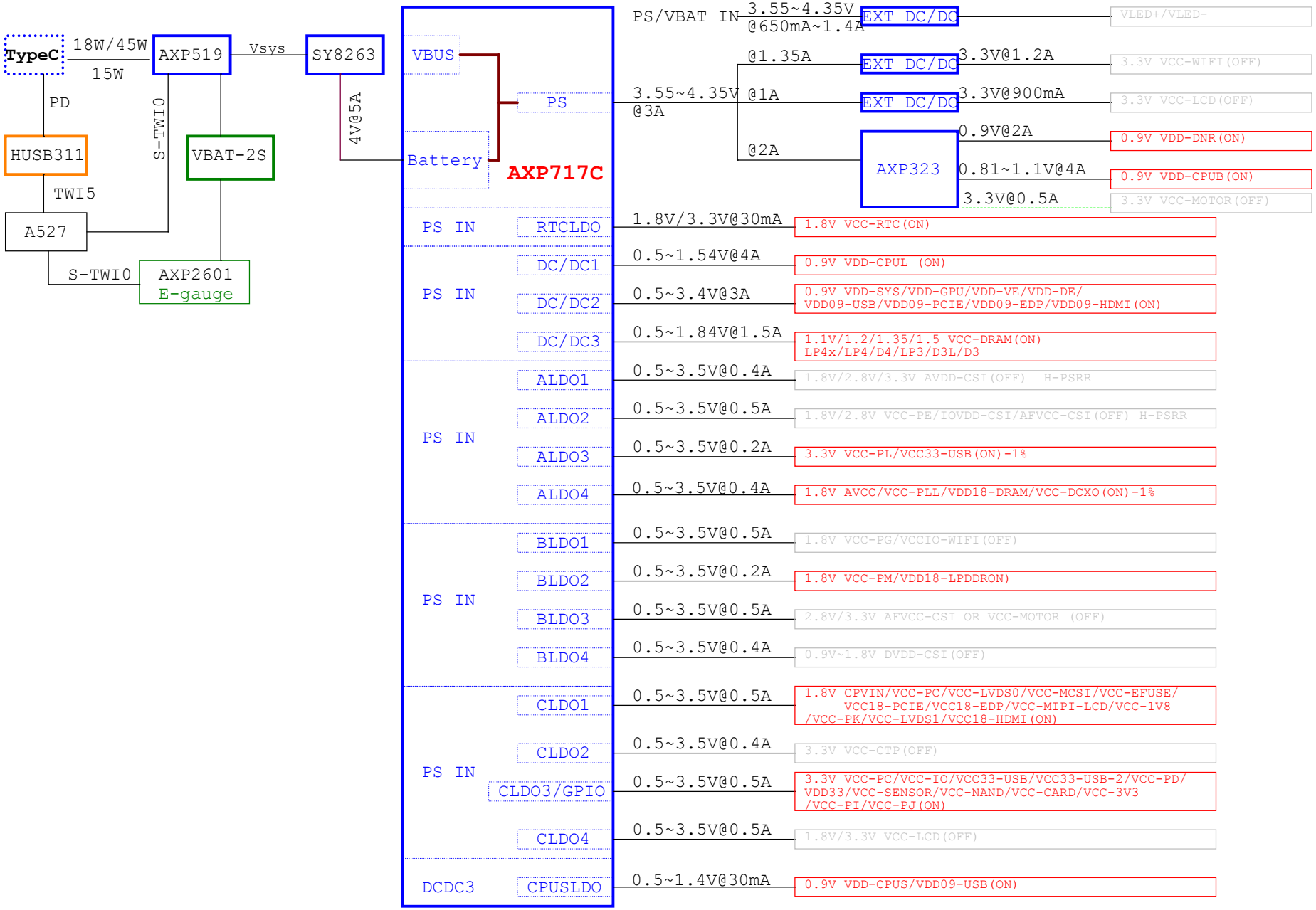

AllWinner Technology Co.,Ltd			
Design Name	A527-STD-AXP717C-LPDDR4-4X-32X1		
Size A3	Page Name 03 POWER TREE		Rev
Date: Wednesday, May 08, 2024	Sheet 3 of 27		

POWER SEQUENCE

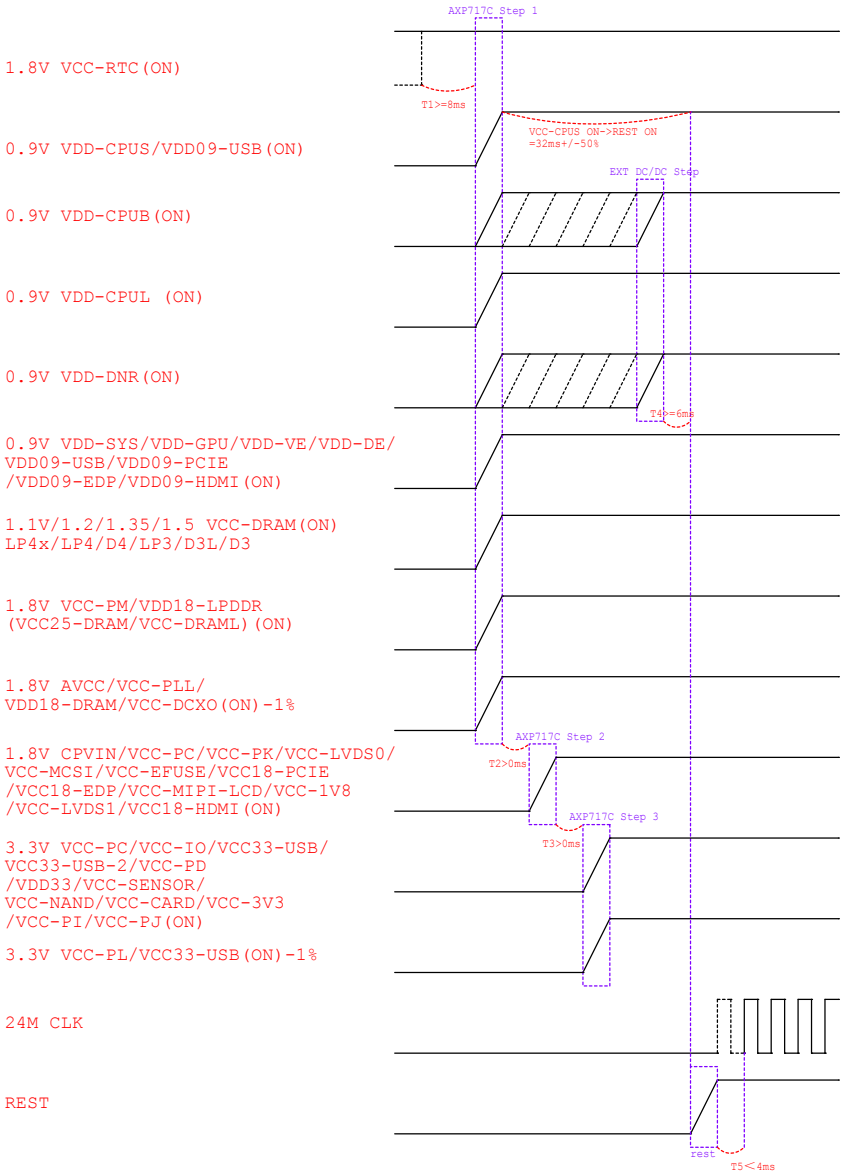

1.VCC-LVDS0 must be ramped before VCC-PD
2.VCC-MCSI must be ramped before VCC-PK
3.VCC-EFUSE must be ramped after VDD-SYS
4.VCC-LVDS1 must be ramped before VCC-PJ

SWITCH STATUS

	normal work	super standby	shut down	Android static main interface
1.8V VCC-RTC(ON)	ON	ON	ON	ON
0.9V VDD-CPUL (ON)	ON	OFF	OFF	ON
0.9V VDD-SYS/VDD-GPU/VDD-VE/VDD-DE/ VDD09-USB/VDD09-PCIE/VDD09-EDP/VDD09-HDMI(ON)	ON	OFF	OFF	ON
1.1V/1.2/1.35/1.5 VCC-DRAM(ON) LP4x/LP4/D4/LP3/D3L/D3	ON	ON	OFF	ON
1.8V/2.8V/3.3V AVDD-CSI(OFF) H-PSRR	OFF/ON	OFF	OFF	OFF
1.8V/2.8V VCC-PE/IOVDD-CSI/AFVCC-CSI(OFF) H-PSRR	OFF/ON	OFF	OFF	OFF
3.3V VCC-PL/VCC33-USB(ON)-1%	ON	ON	OFF	ON
1.8V AVCC/VCC-PLL/VDD18-DRAM/VCC-DCXO(ON)-1%	ON	OFF	OFF	ON
1.8V VCC-PG/VCCIO-WIFI(OFF)	OFF/ON	OFF	OFF	OFF
1.8V VCC-PM/VDD18-LPDDR(VCC25-DRAM/VCC-DRAML)(ON)	ON	ON	OFF	ON
2.8V/3.3V AFVCC-CSI OR VCC-MOTOR (OFF)	OFF/ON	OFF	OFF	OFF
0.9V~1.8V DVDD-CSI(OFF)	OFF/ON	OFF	OFF	OFF
1.8V CPVIN/VCC-PC/VCC-LVDS0/VCC-MCSI/VCC-EFUSE/ VCC-PK/VCC18-PCIE/VCC18-EDP/VCC-MIPI-LCD/VCC-1V8 /VCC-LVDS1/VCC18-HDMI(ON)	ON	OFF	OFF	ON
3.3V VCC-CTP(OFF)	OFF/ON	OFF	OFF	ON
3.3V VCC-IO/VCC33-USB/VCC33-USB-2/VCC-PD/ VDD33/VCC-SENSOR/VCC-NAND/VCC-CARD/VCC-3V3 /VCC-PI/VCC-PJ(ON)	ON	OFF	OFF	ON
1.8V/3.3V VCC-LCD(OFF)	OFF/ON	OFF	OFF	ON
0.9V VDD-CPUS/VDD09-USB(ON)	ON	ON	OFF	ON
AVDD-LCD/VGH-LCD/VGL-LCD	OFF/ON	OFF	OFF	ON
VLED+/VLED-	OFF/ON	OFF	OFF	ON
3.3V VCC-WIFI(OFF)	OFF/ON	OFF	OFF	OFF
3.3V VCC-LCD(OFF)	OFF/ON	OFF	OFF	ON
0.9V VDD-DNR(ON)	ON	OFF	OFF	ON
0.9V VDD-CPUB(ON)	ON	OFF	OFF	ON

GPIO ASSIGNMENT

PIN	Define	CFG	Function
PB0	CPUX-TMS	4	DEBUG
PB1	CPUX-TCK	4	
PB2	CPUX-TDO	4	
PB3	CPUX-TDI	4	
PB4	I2S0-MCLK	3	I2S
PB5	I2S0-BCLK	3	
PB6	I2S0-LRCK	3	
PB7			
PB8	I2S0-DIN	3	
PB9	CPUX-TX	2	DEBUG
PB10	CPUX-RX	2	
PB11			
PB12			
PB13			
PB14			

PIN	Define	CFG	Function
PC0	SDC2-DS	3	eMMC
PC1	SDC2-RST	3	
PC2			
PC3			
PC4			
PC5	SDC2-CLK	3	
PC6	SDC2-CMD	3	
PC7			
PC8	SDC2-D3	3	
PC9	SDC2-D4	3	
PC10	SDC2-D0	3	
PC11	SDC2-D5	3	
PC12			
PC13	SDC2-D1	3	
PC14	SDC2-D6	3	
PC15	SDC2-D2	3	
PC16	SDC2-D7	3	

PIN	Define	CFG	Function
PF0	SDC0-D1	2	CARD
PF1	SDC0-D0	2	
PF2	SDC0-CLK	2	
PF3	SDC0-CMD	2	
PF4	SDC0-D3	2	
PF5	SDC0-D2	2	
PF6	SDC0-DET	0	

PIN	Define	CFG	Function
PD0			LCD
PD1			
PD2			
PD3			
PD4			
PD5			
PD6			
PD7			
PD8			
PD9			
PD10	MIPI-DSI1-DP0	4	
PD11	MIPI-DSI1-DN0	4	
PD12	MIPI-DSI1-DP1	4	
PD13	MIPI-DSI1-DN1	4	
PD14	MIPI-DSI1-CKP	4	
PD15	MIPI-DSI1-CKN	4	
PD16	MIPI-DSI1-DP2	4	
PD17	MIPI-DSI1-DN2	4	
PD18	MIPI-DSI1-DP3	4	
PD19	MIPI-DSI1-DN3	4	
PD20			
PD21			
PD22	LCD-RST	1	
PD23	LCD-PWM	3	

PIN	Define	CFG	Function
PG0	WL-SDIO-CLK	2	WIFI/BT
PG1	WL-SDIO-CMD	2	
PG2	WL-SDIO-D0	2	
PG3	WL-SDIO-D1	2	
PG4	WL-SDIO-D2	2	
PG5	WL-SDIO-D3	2	
PG6	BT-UART-RX	2	
PG7	BT-UART-TX	2	
PG8	BT-UART-CTS	2	
PG9	BT-UART-RTS	2	
PG10			
PG11	BT-PCM-CLK	3	
PG12	BT-PCM-SYNC	3	
PG13	BT-PCM-DIN	3	
PG14	BT-PCM-DOUT	3	

PIN	Define	CFG	Function
PM0	WL-WAKE-AP	0	WIFI/BT
PM1	WL-REG-ON	1	
PM2	BT-RESETN	1	
PM3	AP-WAKE-BT	1	
PM4	BT-WAKE-AP	0	
PM5	WL-DIS-N	1	

PIN	Define	CFG	Function
PH0	TWI0-SCK	2	TWI
PH1	TWI0-SDA	2	
PH2	TWI1-SCK	2	
PH3	TWI1-SDA	2	
PH4	PS-EINT	14	GPIO
PH5	OVP-ACOK	0	
PH6	PA-SHDN	1	
PH7	GMA340-SEL	1	
PH8	GMA340-OE	1	
PH9	CTP-INT	14	
PH10	CTP-RST	1	
PH11	GS-INT	14	
PH12	TWI3-SCK	3	TWI
PH13	TWI3-SDA	3	
PH14	3V3-1V8-EN	1	GPIO
PH15			
PH16			
PH17	DDR-PARA-SEL-GPIO	0	
PH18	LCD-BL-EN	1	
PH19			

PIN	Define	CFG	Function
PL0	PMU-SCK	2	CPUS
PL1	PMU-SDA	2	
PL2	USB-VBUSDET	0	
PL3	ACIN-DET	0	
PL4	USB0-EN	1	
PL5	GYRO-INT1	14	
PL6	GYRO-INT2	14	
PL7	VCC-WIFI-PWREN	1	
PL8	USB1-DRVVBUS	1	
PL9	EINT-HAL	14	
PL10	KD-EINT	14	
PL11	LED-EN	1	
PL12	USB-DRVVBUS	1	
PL13	CC-INT	14	

PIN	Define	CFG	Function
PK0	MCSIA-D0N	2	MIPI-CSI
PK1	MCSIA-D0P	2	
PK2	MCSIA-D1N	2	
PK3	MCSIA-D1P	2	
PK4	MCSIA-CKN	2	
PK5	MCSIA-CKP	2	
PK6	MCSIB-D0N	2	
PK7	MCSIB-D0P	2	
PK8	MCSIB-D1N	2	
PK9	MCSIB-D1P	2	
PK10			
PK11			
PK12	MCSIC-D0N	2	
PK13	MCSIC-D0P	2	
PK14	MCSIC-D1N	2	
PK15	MCSIC-D1P	2	
PK16	MCSIC-CKN	2	
PK17	MCSIC-CKP	2	
PK18			
PK19			
PK20			
PK21			
PK22			
PK23			

PIN	Define	CFG	Function
PE0			CAMERA
PE1			
PE2			
PE3			
PE4			
PE5			
PE6	MCSIB-STBY-F	1	
PE7	MCSIB-RST-F	1	
PE8	MCSIA-STBY-R	1	
PE9	MCSIA-RST-R	1	
PE10			
PE11			
PE12			
PE13	MCSI-SCK	2	
PE14	MCSI-SDA	2	
PE15	MCSI-MCLK	2	

TWI MAP

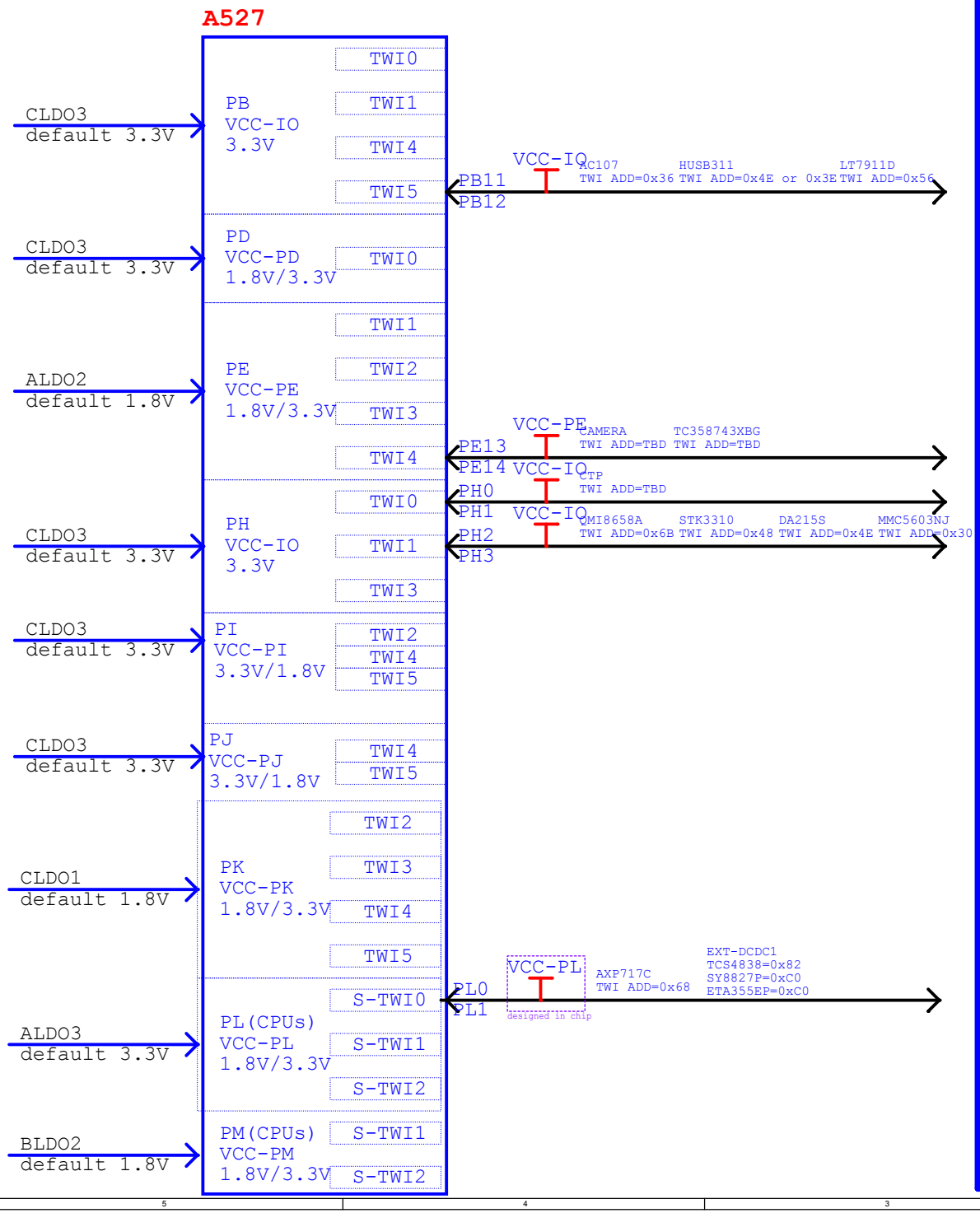

UART MAP

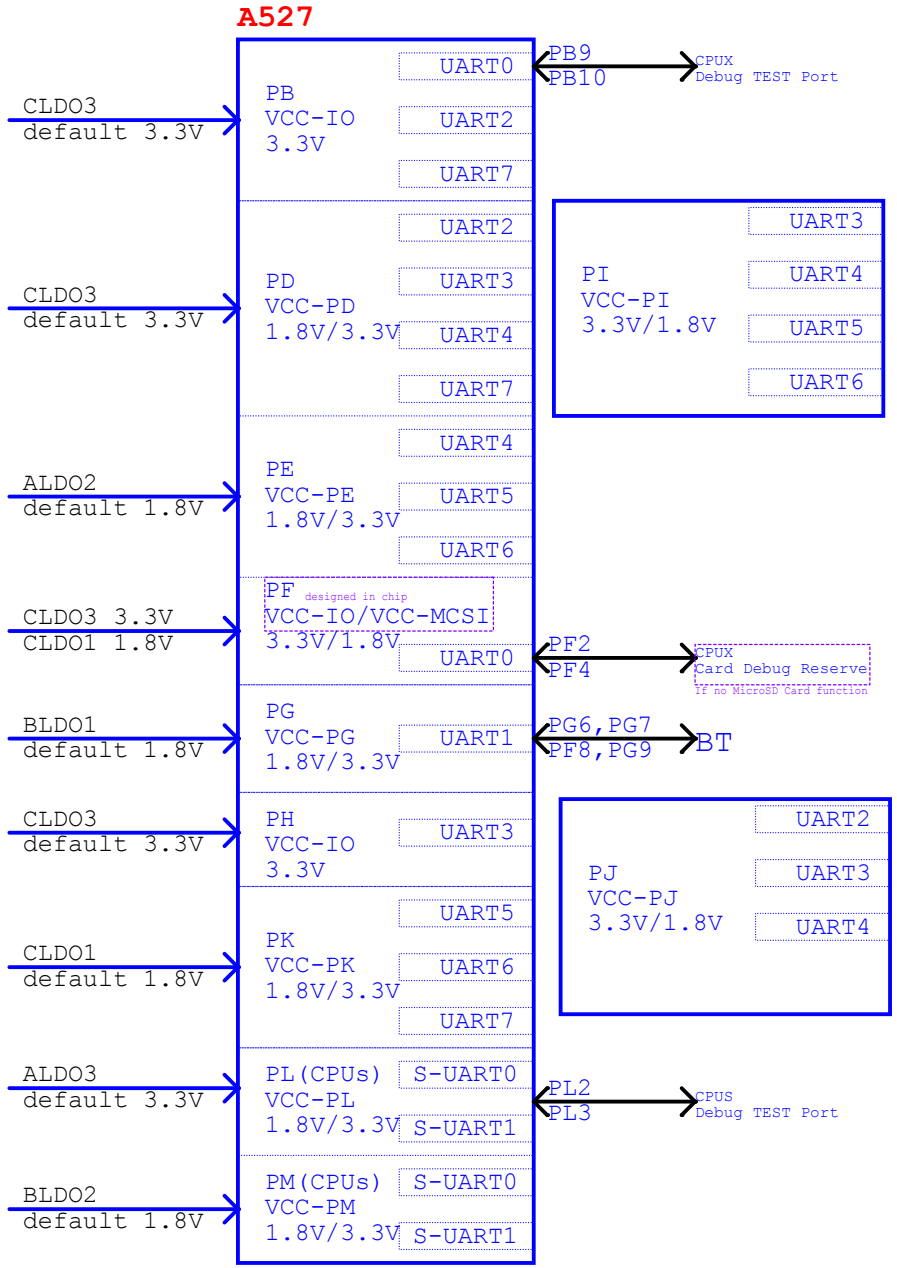

AllWinner Technology Co.,Ltd			
Design Name	A527-STD-AXP717C-LPDDR4-4X-32X1		
Size A3	Page Name 06 TWI&UART MAP		Rev
Date: Wednesday, May 08, 2024	Sheet 6 of 27		

BAT

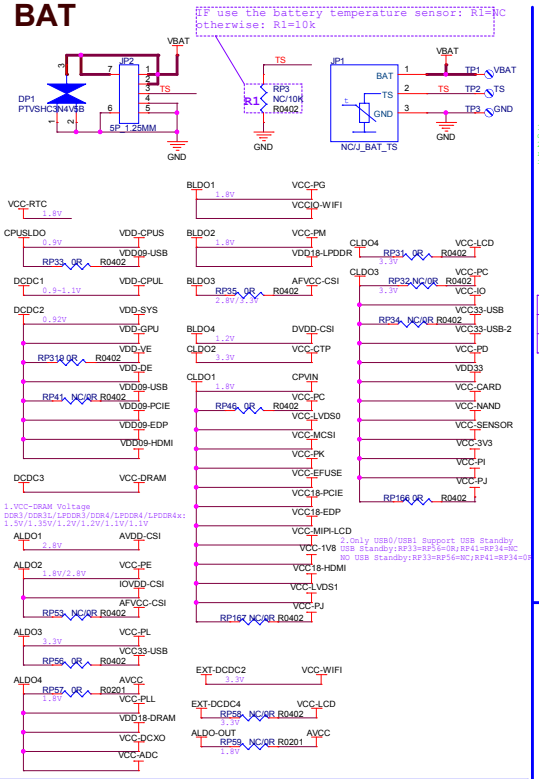

PMIC

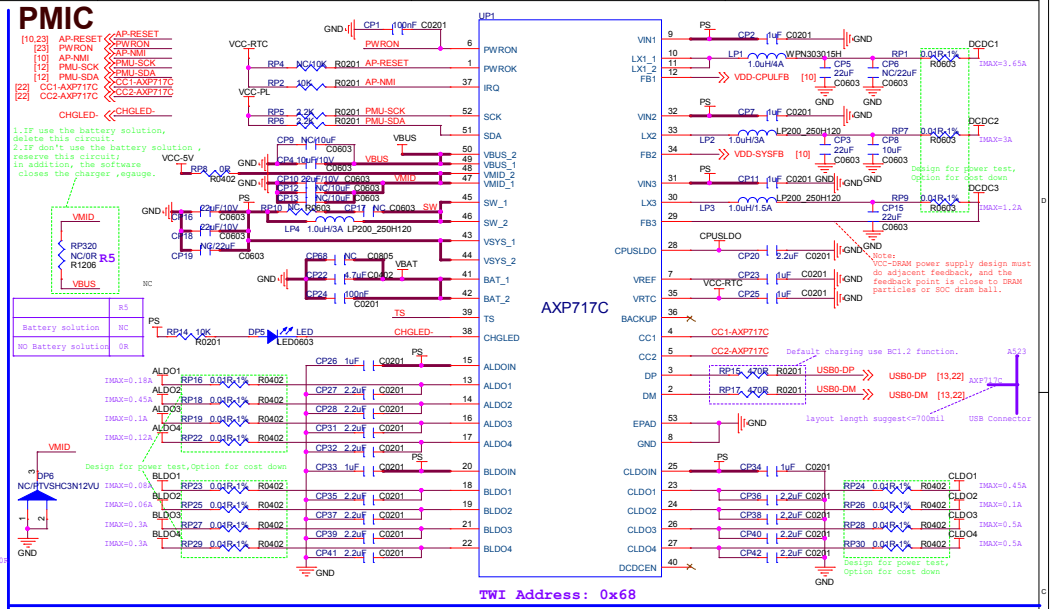

AXP323

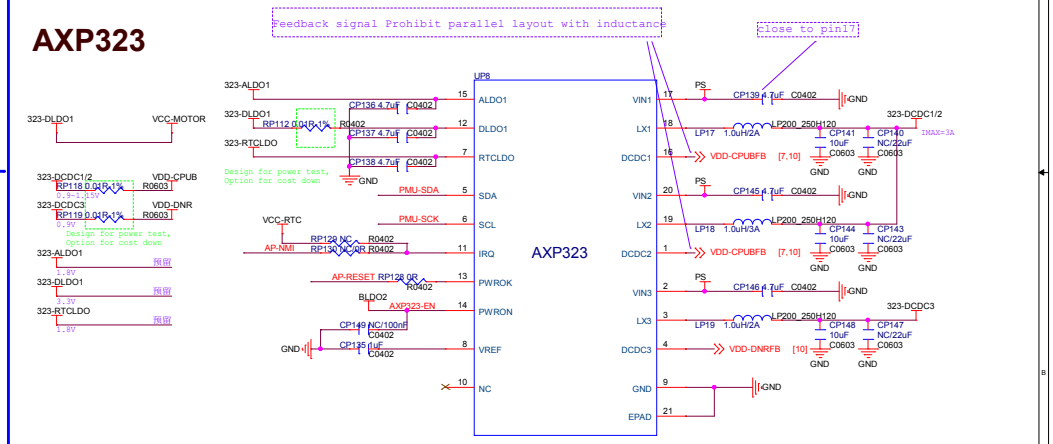

EXT DCDC

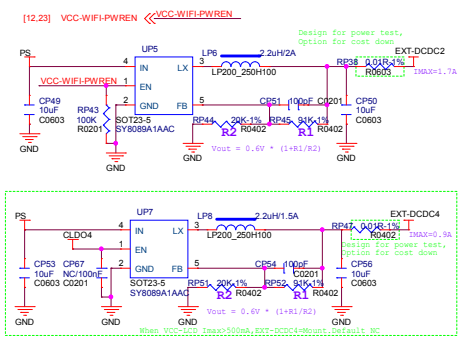

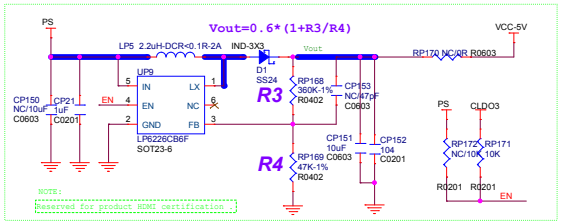

Reserve For VDD-VE

When using A527M, if the VE specification needs to meet 4K@60fps,
Then an external power supply needs to be used to separately power the VDD-VE,
with a voltage value of 1.05V.

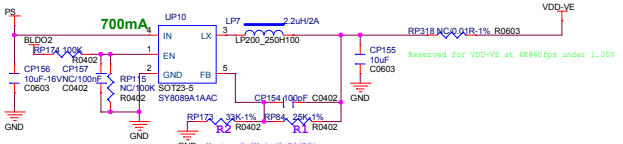

AllWinner Technology Co.,Ltd	
Design Name	A527-STD-AXP717C-LPDDR4-4X-32X1
Size Custom / Page Name	07 POWER-AXP717C+AXP323 / Rev
Date: Tuesday, June 18, 2024	Sheet 7 of 27

QUICK CHARGER -nCELL

9V 2A

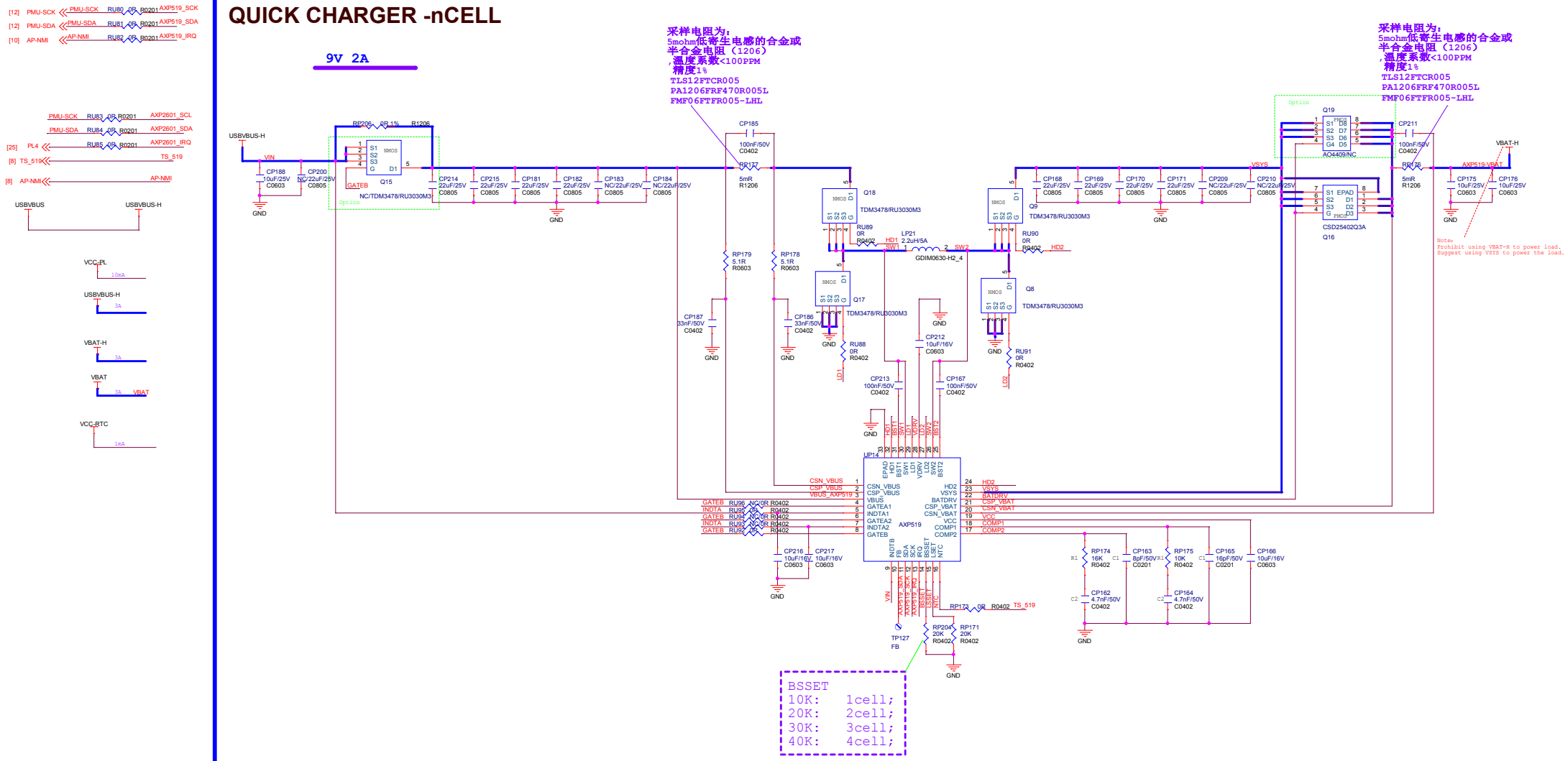

Design Name	A527-STD-AXP717C-LPDDR4-4X-32X1
Page Name	07-2 Quick Charger_2S lion
Size	A2
Rev	
Date:	Thursday, May 09, 2024
Sheet	7 of 27

AllWinner Technology Co.,Ltd

BAT

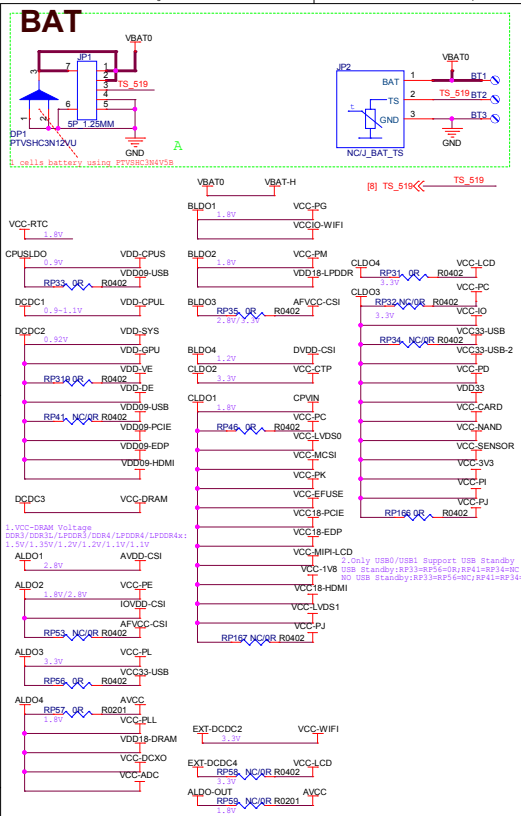

PMIC

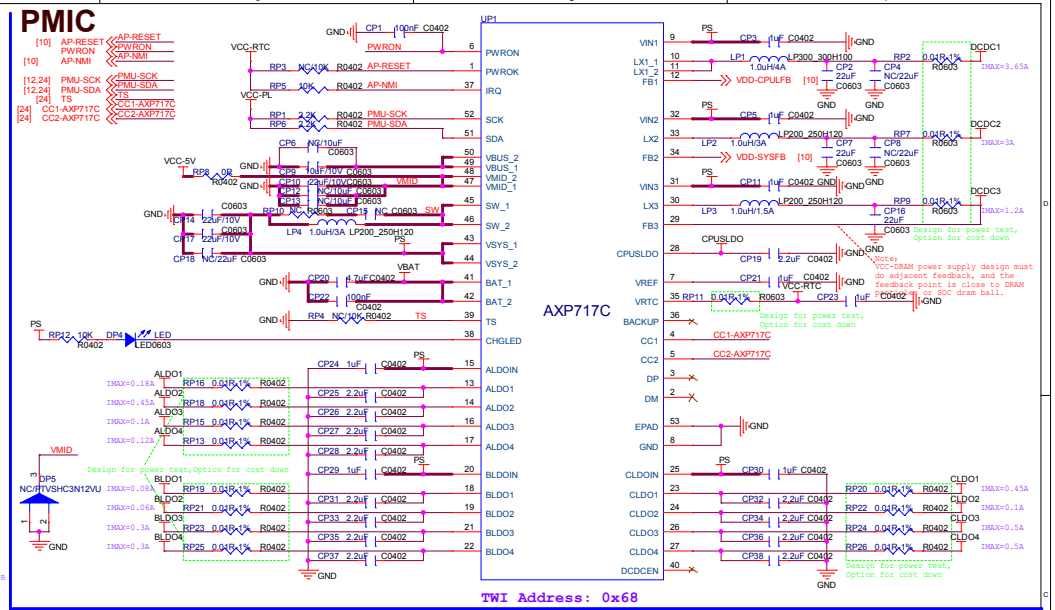

AXP323

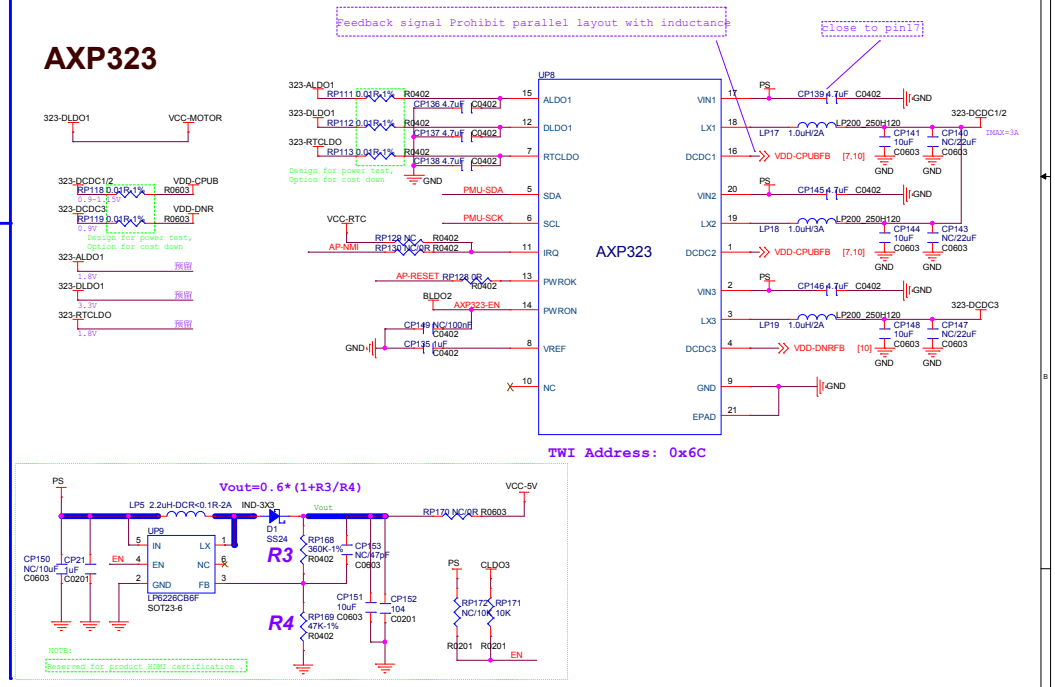

EXT DCDC

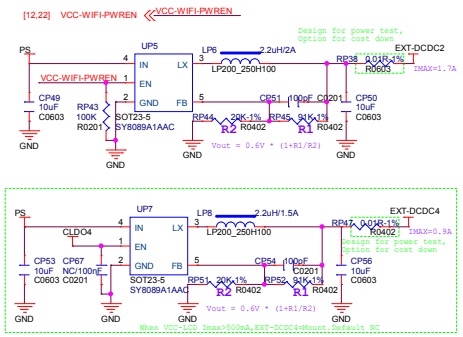

Reserve For VDD-VE

When using A527M, if the VE specification needs to meet 4K@60fps, Then an external power supply needs to be used to separately power the VDD-VE, with a voltage value of 1.05V.

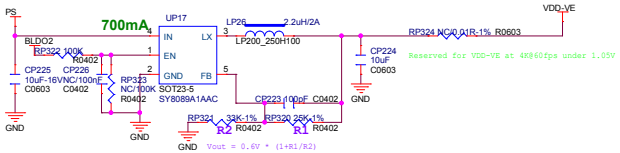

AllWinner Technology Co.,Ltd	
Design Name: A527-STD-AXP717C-LPDDR4-4X-32X1	
Size: Custom	Page Name: 07-1 POWER-AXP717C_2S lion
Rev	
Date: Tuesday, June 18, 2024	Sheet 7 of 27

POWER

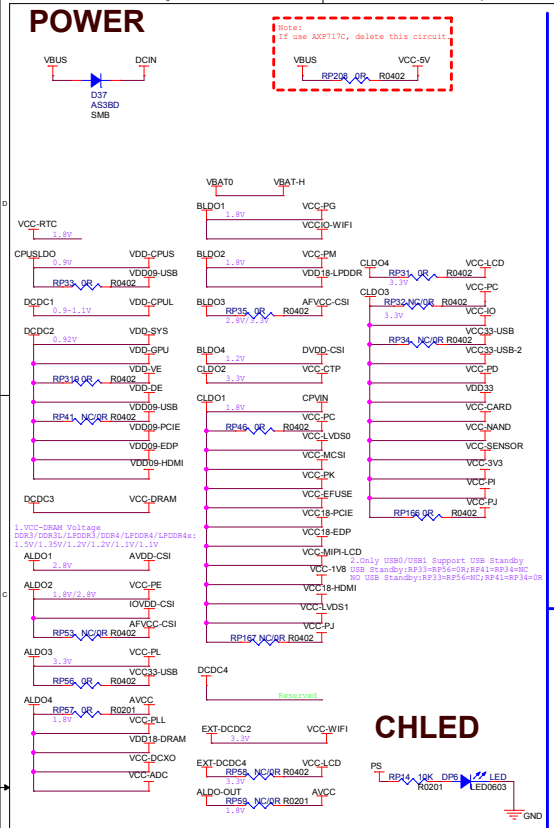

CHLED

EXT DCDC

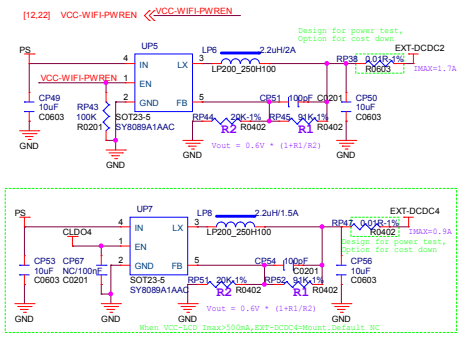

PMIC

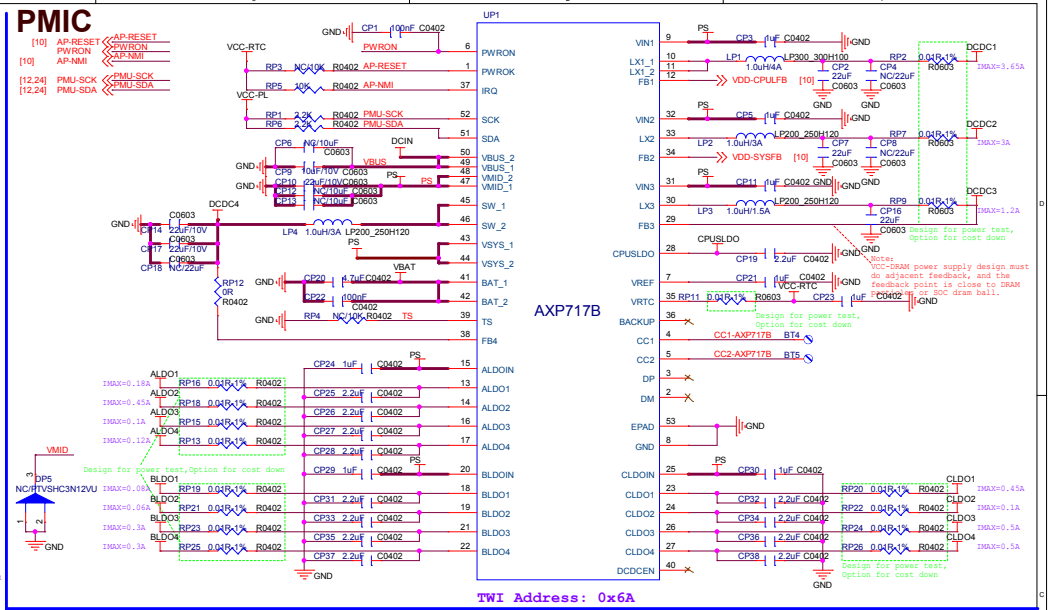

AXP323

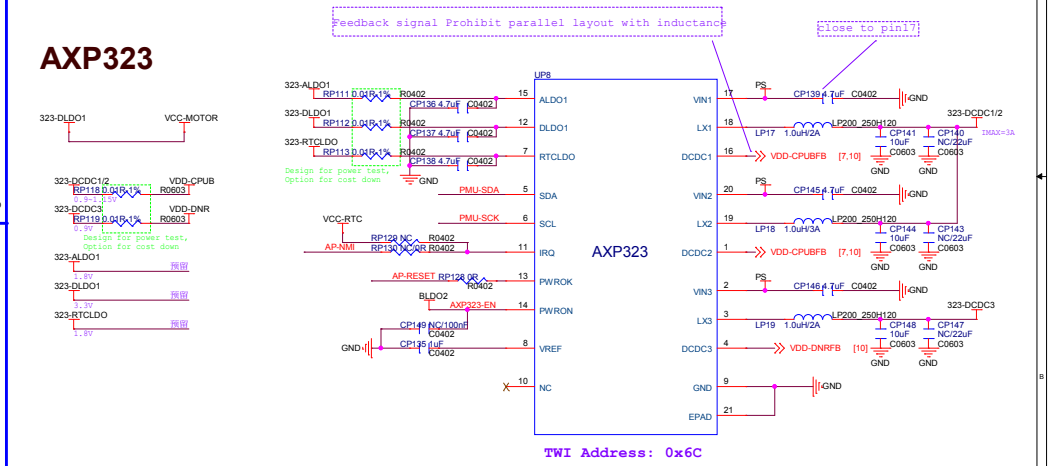

Reserve For VDD-VE

When using A527M, if the VE specification needs to meet 4K@60fps,
Then an external power supply needs to be used to separately power the VDD-VE,
with a voltage value of 1.05V.

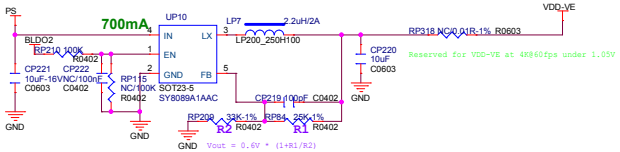

AllWinner Technology Co.,Ltd		
Design Name: A527-STD-AXP717C-LPDDR4-4X-32X1		
Size: Custom	Page Name: 07 POWER-AXP717B-AXP323	Rev
Date: Thursday, May 09, 2024	Sheet 7 of 27	

ACIN

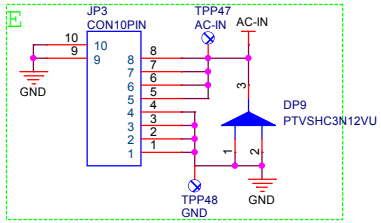

Default:
NOT ACIN and Solution 1,Support OVP

Circuit	ACIN	NOT ACIN,Support OVP
A	USE	NC
B	USE	NC
C	NC	USE
E	USE	NC

[12] USB-DRVVBUS — USB-DRVVBUS
[12,23] USB-VBUSDET — USB-VBUSDET
[12,23] ACIN-DET — ACIN-DET
[12,23] USB0-EN — USB0-EN
[11] OVP-INT — OVP-INT

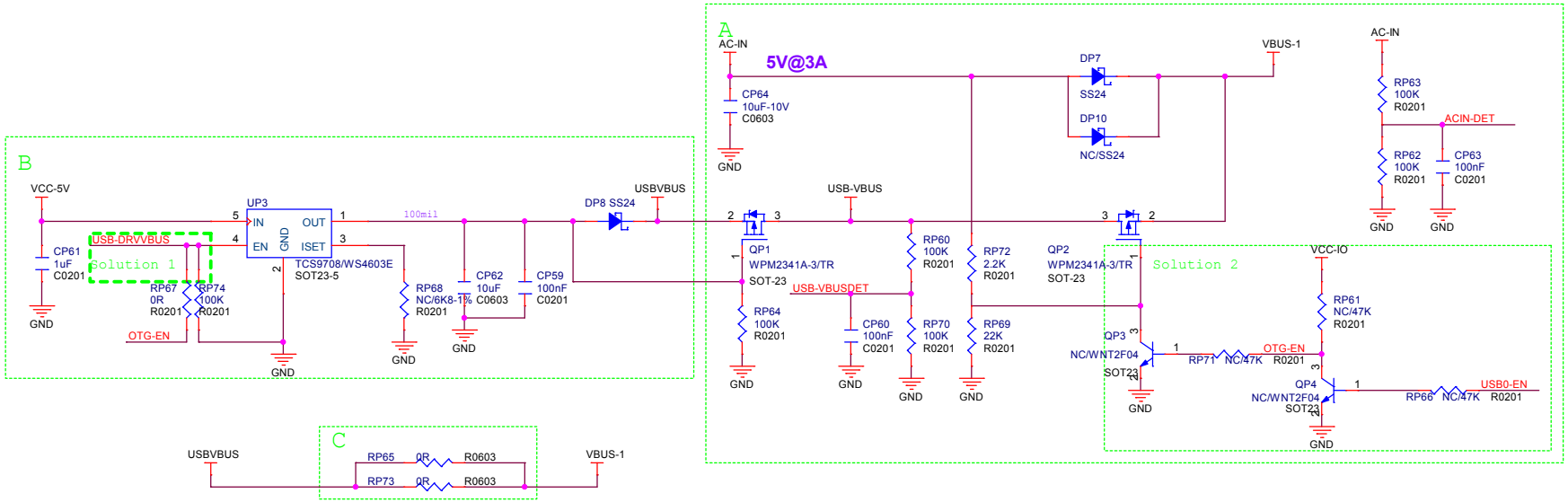

OVP

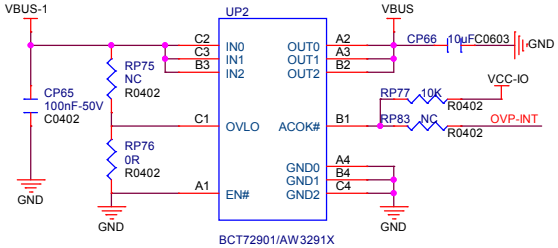

AllWinner Technology Co.,Ltd		
Design Name	A527-STD-AXP717C-LPDDR4-4X-32X1	
Size A3	Page Name 08 POWER-ACIN	Rev
Date: Wednesday, May 08, 2024	Sheet 8 of 27	

QUICK CHARGER -1 CELL

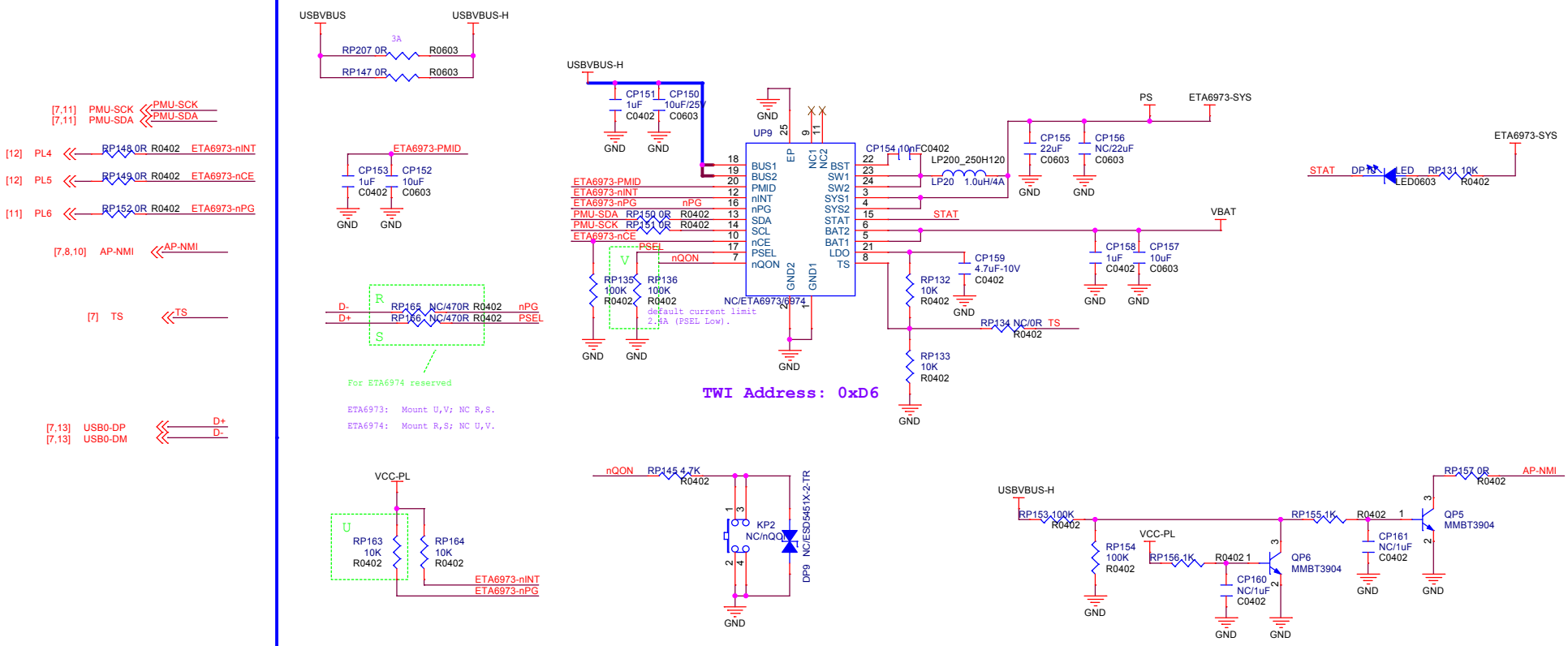

AllWinner Technology Co.,Ltd		
Design Name	A527-STD-AXP717C-LPDDR4-4X-32X1	
Size A3	Page Name 08 Quick Charger_1S lion	Rev
Date: Wednesday, May 08, 2024	Sheet 8 of 27	

LPDDR4-4X

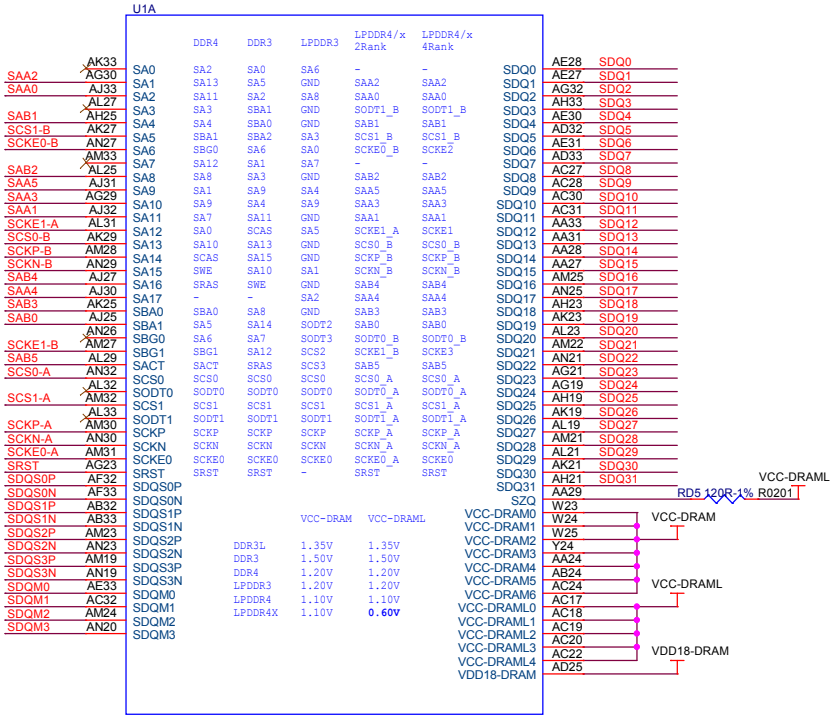

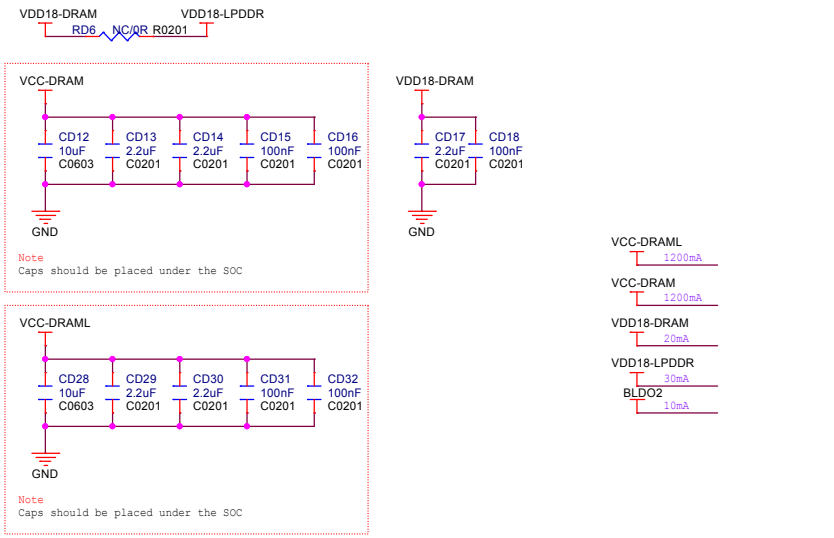

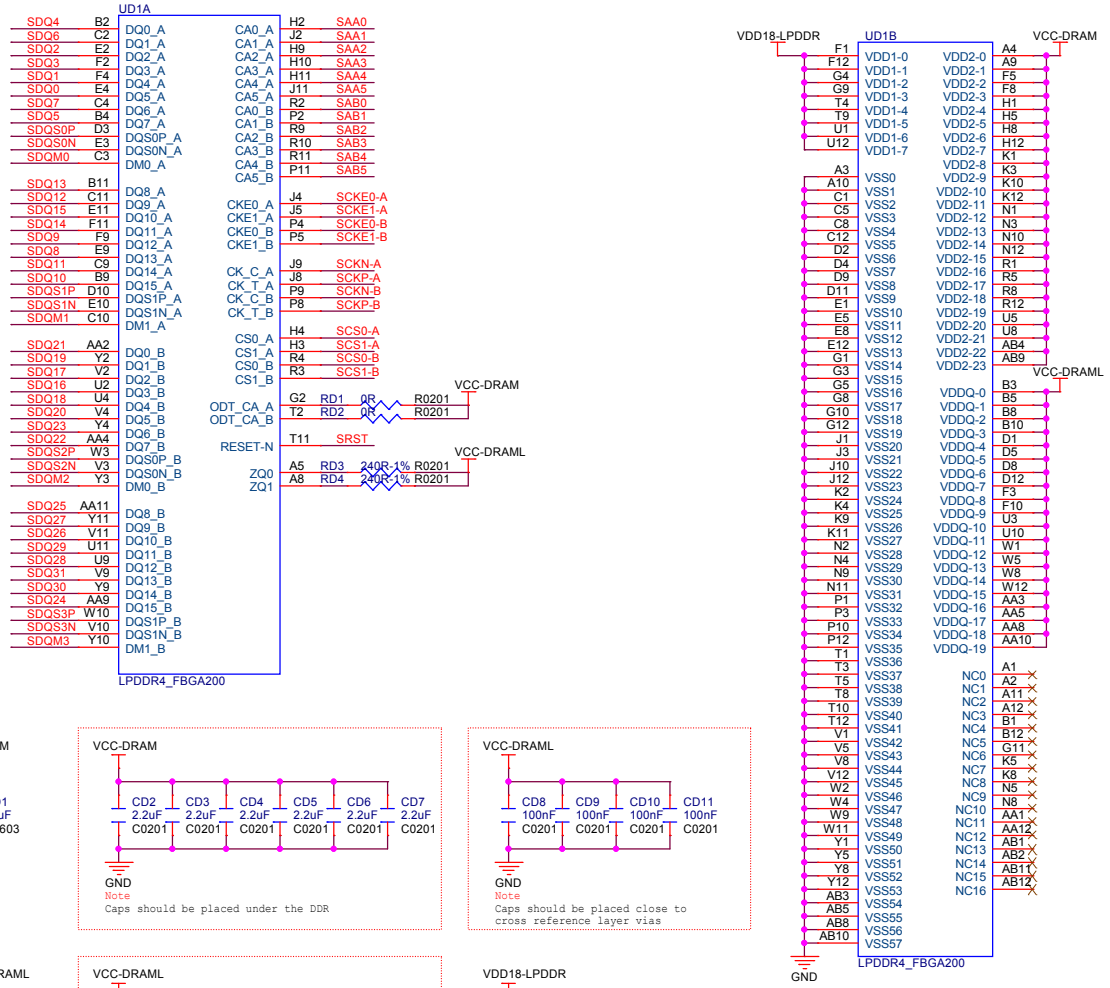

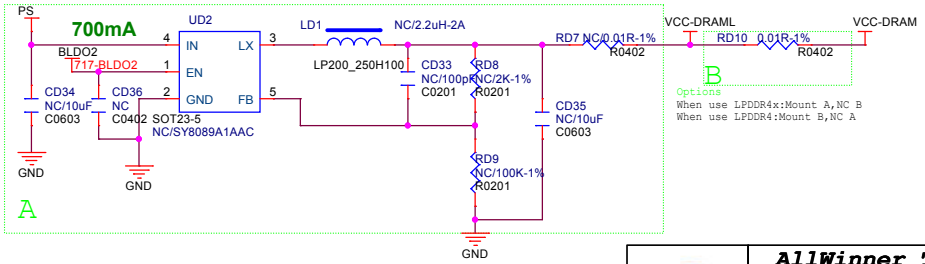

AllWinner Technology Co.,Ltd		
Design Name	A527-STD-AXP717C-LPDDR4-4X-32X1	
Size A3	Page Name 09 A527 DDR	Rev
Date: Wednesday, May 08, 2024	Sheet 9 of 27	

SYS

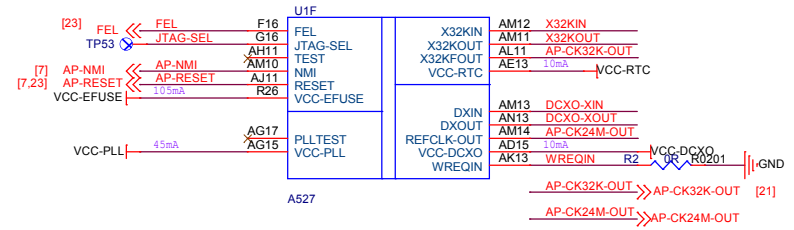

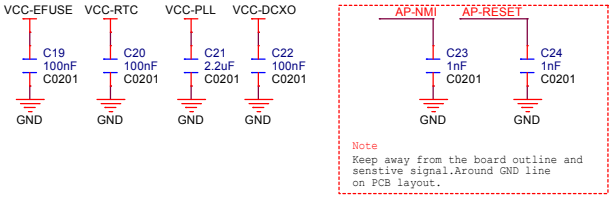

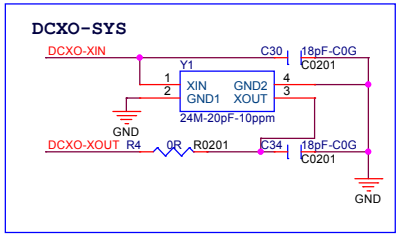

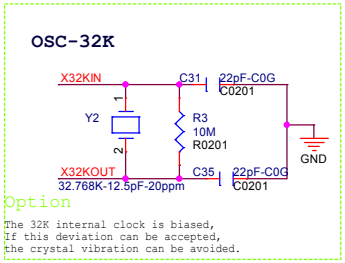

CORE POWER

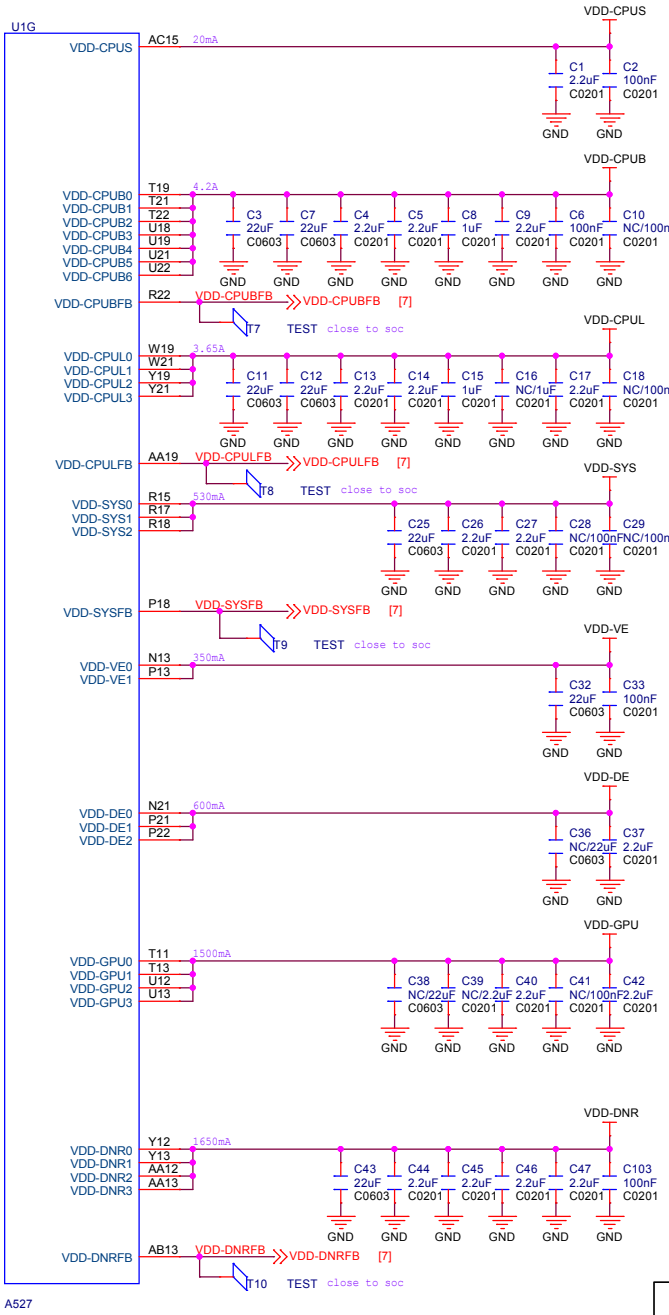

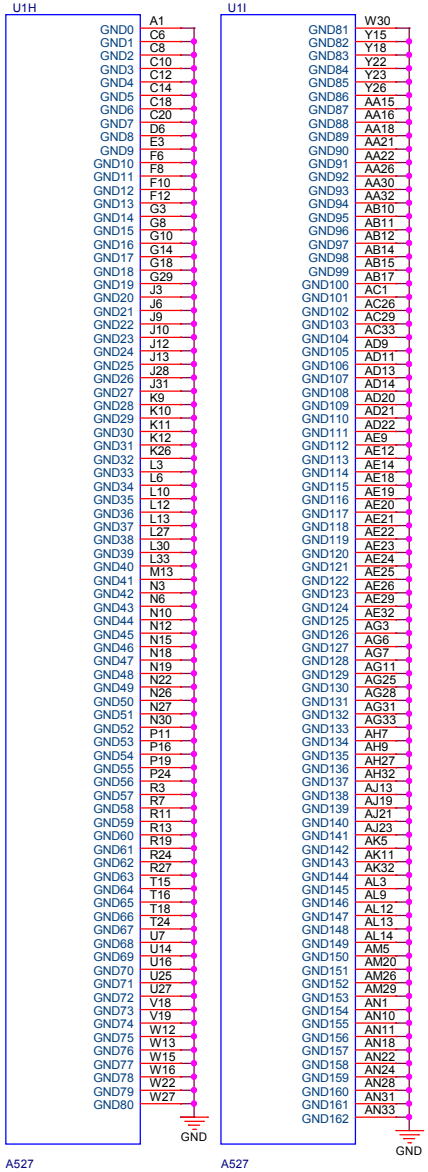

AllWinner Technology Co.,Ltd			
Design Name	A527-STD-AXP717C-LPDDR4-4X-32X1		
Size A3	Page Name 10 A527 SYS		Rev
Date: Wednesday, May 08, 2024		Sheet 10 of 27	

GPIO

U1B

Net	Pin	Function
PB0	N28	PB0/UART2-TX/SPI2-CS0/JTAG-MS/LCD0-D0/PWM0-6/PB-EINT0
PB1	N29	PB1/UART2-RX/SPI2-CLK/JTAG-CK/LCD0-D1/PWM0-7/PB-EINT1
PB2	M31	PB2/UART2-RTS/SPI2-MOSI/JTAG-DO/LCD0-D8/PB-EINT2
PB3	M32	PB3/UART2-CTS/SPI2-MISO/JTAG-DI/LCD0-D9/PB-EINT3
I2S0-MCLK	N31	PB4/TWI1-SCK/I2S0-MCLK/TRACE-DATA2/PWM0-8/HDMI-SCL/PB-EINT4
I2S0-BCLK	N32	PB5/TWI1-SDA/I2S0-BCLK/TRACE-CLK/PWM0-9/HDMI-SDA/PB-EINT5
I2S0-LRCK	N33	PB6/I2S0-LRCK/TRACE-DATA0/PWM0-10/HDMI-CEC/PB-EINT6
PB7	P31	PB7/OWA-IN/I2S0-DOUT0/I2S0-DIN1/LCD0-D16/PWM0-11/PB-EINT7
I2S0-DIN	P32	PB8/OWA-OUT/I2S0-DIN0/I2S0-DOUT1/LCD0-D17/PWM0-0/PB-EINT8
CPUX-TX	R28	PB9/UART0-TX/TWI0-SCK/TRACE-DATA1/I2S0-DIN2/I2S0-DOUT2/PB-EINT9
CPUX-RX	R29	PB10/UART0-RX/TWI0-SDA/PWM0-1/I2S0-DIN3/I2S0-DOUT3/PB-EINT10
	R30	PB11/TWI5-SCK/UART7-RTS/SPI1-CS0/PWM0-2/PB-EINT11
	R31	PB12/TWI5-SDA/UART7-CTS/SPI1-CLK/PWM0-3/PB-EINT12
PB13	R32	PB13/TWI4-SCK/UART7-TX/SPI1-MOSI/PWM0-4/PB-EINT13
PB14	R33	PB14/TWI4-SDA/UART7-RX/SPI1-MISO/PWM0-5/PB-EINT14
eMMC-DS	W28	PC0/NAND-WE/SDC2-DS/PC-EINT0
eMMC-RST	Y31	PC1/NAND-ALE/SDC2-RST/PC-EINT1
	U30	PC2/NAND-CLE/SPI0-MOSI/SPIF-MOSI/PC-EINT2
	U29	PC3/NAND-CE1/SPI0-CS0/SPIF-CS0/PC-EINT3
	U28	PC4/NAND-CE0/SPI0-MISO/SPIF-MISO/PC-EINT4
eMMC-CLK (RM1 33R R0201)	Y32	PC5/NAND-RE/SDC2-CLK/PC-EINT5
eMMC-CMD	W33	PC6/NAND-RB0/SDC2-CMD/PC-EINT6
	W29	PC7/NAND-RB1/SPI0-CS1/SPIF-DQS/PC-EINT7
eMMC-D3	W32	PC8/NAND-DQ7/SDC2-D3/SPIF-D7/PC-EINT8
eMMC-D4	W31	PC9/NAND-DQ6/SDC2-D4/SPIF-D6/PC-EINT9
eMMC-D0	V32	PC10/NAND-DQ5/SDC2-D0/SPIF-D5/PC-EINT10
eMMC-D5	V31	PC11/NAND-DQ4/SDC2-D5/SPIF-D4/PC-EINT11
	U33	PC12/NAND-DQS/SPI0-CLK/SPIF-CLK/PC-EINT12
eMMC-D1	U32	PC13/NAND-DQ3/SDC2-D1/PC-EINT13
eMMC-D6	U31	PC14/NAND-DQ2/SDC2-D6/PC-EINT14
eMMC-D2	T32	PC15/NAND-DQ1/SDC2-D2/SPI0-WP/SPIF-WP/PC-EINT15
eMMC-D7	T31	PC16/NAND-DQ0/SDC2-D7/SPI0-HOLD/SPIF-HOLD/PC-EINT16
VCC-PC (60mA)	U26	VCC-PC
PD0	D32	PD0/LCD0-D2/LVDS0-D0P/DSI0-D0P/PWM0-0/PD-EINT0
PD1	D33	PD1/LCD0-D3/LVDS0-D0N/DSI0-D0N/PWM0-1/PD-EINT1
PD2	E30	PD2/LCD0-D4/LVDS0-D1P/DSI0-D1P/PWM0-2/PD-EINT2
PD3	E31	PD3/LCD0-D5/LVDS0-D1N/DSI0-D1N/PWM0-3/PD-EINT3
PD4	E32	PD4/LCD0-D6/LVDS0-D2P/DSI0-CKP/PWM0-4/PD-EINT4
PD5	E33	PD5/LCD0-D7/LVDS0-D2N/DSI0-CKN/PWM0-5/PD-EINT5
PD6	F32	PD6/LCD0-D10/LVDS0-CKP/DSI0-D2P/PWM0-6/PD-EINT6
PD7	F33	PD7/LCD0-D11/LVDS0-CKN/DSI0-D2N/PWM0-7/PD-EINT7
PD8	G30	PD8/LCD0-D12/LVDS0-D3P/DSI0-D3P/PWM0-8/PD-EINT8
PD9	G31	PD9/LCD0-D13/LVDS0-D3N/DSI0-D3N/PWM0-9/PD-EINT9
PD10	G32	PD10/LCD0-D14/LVDS1-D0P/DSI1-D0P/PWM0-10/SPI1-CS0/DBI-CSX/PD-EINT10
PD11	G33	PD11/LCD0-D15/LVDS1-D0N/DSI1-D0N/PWM0-11/SPI1-CLK/DBI-SCLK/PD-EINT11
PD12	H31	PD12/LCD0-D18/LVDS1-D1P/DSI1-D1P/PWM0-12/SPI1-MOSI/DBI-SDO/PD-EINT12
PD13	H32	PD13/LCD0-D19/LVDS1-D1N/DSI1-D1N/PWM0-13/SPI1-MISO/DBI-SDI/DBI-TE/DBI-DCX/PD-EINT13
PD14	J29	PD14/LCD0-D20/LVDS1-D2P/DSI1-CKP/PWM0-14/UART3-TX/PD-EINT14
PD15	J30	PD15/LCD0-D21/LVDS1-D2N/DSI1-CKN/PWM0-15/UART3-RX/PD-EINT15
PD16	J32	PD16/LCD0-D22/LVDS1-CKP/DSI1-D2P/PWM1-0/UART3-RTS/PD-EINT16
PD17	J33	PD17/LCD0-D23/LVDS1-CKN/DSI1-D2N/PWM1-1/UART3-CTS/PD-EINT17
PD18	K31	PD18/LCD0-CLK/LVDS1-D3P/DSI1-D3P/PWM1-2/UART4-TX/PD-EINT18
PD19	K32	PD19/LCD0-DE/LVDS1-D3N/DSI1-D3N/PWM1-3/UART4-RX/PD-EINT19
PD20	L28	PD20/LCD0-HSYNC/PWM0-2/UART2-TX/UART7-RTS/UART4-RTS/PD-EINT20
PD21	L29	PD21/LCD0-VSYNC/PWM0-3/UART2-RX/UART7-CTS/UART4-CTS/PD-EINT21
	L31	PD22/PWM0-1/SPI1-HOLD/DBI-DCX/DBI-WRX/UART2-RTS/UART7-TX/TWI0-SCK/PD-EINT22
	L32	PD23/PWM0-0/SPI1-WP/DBI-TE/UART2-CTS/UART7-RX/TWI0-SDA/PD-EINT23
VCC-PD (150mA)	L26	VCC-PD
VCC-LVDS0 (60mA)	N24	VCC-LVDS0

Net	Pin	Function
	E6	PE0/MCSI0-MCLK/PE-EINT0
	C4	PE1/TWI2-SCK/UART4-TX/PE-EINT1
	E5	PE2/TWI2-SDA/UART4-RX/PE-EINT2
	E4	PE3/TWI3-SCK/UART4-RTS/PE-EINT3
	C3	PE4/TWI3-SDA/UART4-CTS/PE-EINT4
	B3	PE5/MCSI1-MCLK/I2S2-MCLK/LEDC/PE-EINT5
	A3	PE6/I2S2-BCLK/LCD0-TRIG/NCSI-D8/PE-EINT6
MCSI-STBY-F [18]	A2	PE7/I2S2-LRCK/LCD1-TRIG/NCSI-D9/PE-EINT7
MCSI-RST-F [18]	B2	PE8/I2S2-DOUT0/LCD2-TRIG/NCSI-D10/PE-EINT8
MCSI-STBY-R [18]	B1	PE9/I2S2-DIN0/NCSI-D11/PE-EINT9
MCSI-RST-R [18]	C2	PE10/MCSI3-MCLK/PWM0-3/NCSI-D12/PE-EINT10
	J7	PE11/TWI1-SCK/UART5-RTS/SPI2-CS0/UART6-TX/NCSI-D13/PE-EINT11
PE11 [26]	C1	PE12/TWI1-SDA/UART5-CTS/SPI2-CLK/UART6-RX/NCSI-D14/PE-EINT12
PE12 [26]	G6 PE13	PE13/TWI4-SCK/UART5-TX/SPI2-MOSI/UART6-RTS/CSI0-XVS-FSYNC/PE-EINT13
MCSI-SCK [18,26]	L7 PE14	PE14/TWI4-SDA/UART5-RX/SPI2-MISO/UART6-CTS/CSI1-XVS-FSYNC/PE-EINT14
MCSI-SDA [18,26]	N7 RV1 33R R0201	PE15/MCSI2-MCLK/PWM0-2/NCSI-D15/PE-EINT15
MCSI-MCLK [18]	L9 (60mA)	VCC-PE
SDC0-D1 [22]	B20	PF0/SDC0-D1/JTAG-MS/TRACE-DATA2/I2S3-DIN0/I2S3-DOUT1/PF-EINT0
SDC0-D0 [22]	A20	PF1/SDC0-D0/JTAG-DI/TRACE-DATA1/I2S3-DOUT0/I2S3-DIN1/PF-EINT1
SDC0-CLK [22]	C19 RC1 33R R0201	PF2/SDC0-CLK/UART0-TX/I2S3-DIN2/I2S3-DOUT2/PF-EINT2
SDC0-CMD [22]	B19	PF3/SDC0-CMD/JTAG-DO/TRACE-DATA0/I2S3-LRCK/PF-EINT3
SDC0-D3 [22]	B18	PF4/SDC0-D3/UART0-RX/I2S3-DIN3/I2S3-DOUT3/PF-EINT4
SDC0-D2 [22]	A18	PF5/SDC0-D2/JTAG-CK/TRACE-CLK/I2S3-BCLK/PF-EINT5
SDC0-DET [22]	D20	PF6/I2S3-MCLK/PF-EINT6
	R1 RW1 33R R0201	PG0/SDC1-CLK/PG-EINT0
WL-SDIO-CLK [21]	R2	PG1/SDC1-CMD/PG-EINT1
WL-SDIO-CMD [21]	P3 PG2	PG2/SDC1-D0/PCIE0-PERSTN/PG-EINT2
WL-SDIO-D0 [21]	P2 PG3	PG3/SDC1-D1/PCIE0-WAKEN/PG-EINT3
WL-SDIO-D1 [21]	T3 PG4	PG4/SDC1-D2/PCIE0-CLKREQN/PG-EINT4
WL-SDIO-D2 [21]	T2	PG5/SDC1-D3/PG-EINT5
WL-SDIO-D3 [21]	R6	PG6/UART1-TX/PG-EINT6
BT-UART-RX [21]	R5	PG7/UART1-RX/PG-EINT7
BT-UART-TX [21]	R4	PG8/UART1-RTS/PG-EINT8
BT-UART-CTS [21]	U6	PG9/UART1-CTS/PG-EINT9
BT-UART-RTS [21]	U5	PG10/I2S1-MCLK/PG-EINT10
	U4	PG11/I2S1-BCLK/PG-EINT11
BT-PCM-CLK [21]	U3	PG12/I2S1-LRCK/PG-EINT12
BT-PCM-SYNC [21]	U2	PG13/I2S1-DOUT0/I2S1-DIN1/PG-EINT13
BT-PCM-DIN [21]	U1	PG14/I2S1-DIN0/I2S1-DOUT1/PG-EINT14
BT-PCM-DOUT [21]	T9 (70mA)	VCC-PG
TWI0-SCK [15,17]	F18 CTP-SCK	PH0/TWI0-SCK/RGMII0-RXD1/RMII0-RXD1/PH-EINT0
TWI0-SDA [15,17]	E18 CTP-SDA	PH1/TWI0-SDA/RGMII0-RXD0/RMII0-RXD0/PH-EINT1
TWI1-SCK [27]	D18 SENSOR-TWI-SCK	PH2/TWI1-SCK/CPU-CUR-W/I2S2-DIN3/RGMII0-RXCTL/RMII0-CRS-DV/I2S2-DOUT3/PH-EINT2
TWI1-SDA [27]	C17 SENSOR-TWI-SDA	PH3/TWI1-SDA/IR-TX/I2S2-DIN2/RGMII0-CLKIN/RMII0-RXER/I2S2-DOUT2/PH-EINT3
PS-EINT [27]	B17	PH4/UART3-TX/SPI1-CS0/CPU-CUR-W/RGMII0-TXD1/RMII0-TXD1/PH-EINT4
OVP-INT [8]	E16	PH5/UART3-RX/SPI1-CLK/LEDC/RGMII0-TXD0/RMII0-TXD0/PH-EINT5
PA-SHDN [19]	G12	PH6/UART3-RTS/SPI1-MOSI/OWA-IN/RGMII0-TXCK/RMII0-TXCK/PH-EINT6
GMA340-SEL [22]	F14	PH7/UART3-CTS/SPI1-MISO/OWA-OUT/RGMII0-TXCTL/RMII0-TXEN/PH-EINT7
GMA340-OE [22]	D16 PH8	PH8/DMIC-CLK/SPI2-CS0/I2S2-MCLK/I2S2-DIN2/PH-EINT8
CTP-INT [15,17]	C16	PH9/DMIC-DATA0/SPI2-CLK/I2S2-BCLK/RGMII0-MDC/PH-EINT9
CTP-RST [15,17]	B16	PH10/DMIC-DATA1/SPI2-MOSI/I2S2-LRCK/RGMII0-MDIO/PH-EINT10
GS-INT [27]	A16 PH11	PH11/DMIC-DATA2/SPI2-MISO/I2S2-DOUT0/I2S2-DIN1/PCIE0-PERSTN/PH-EINT11
PH12	C15 PH12	PH12/DMIC-DATA3/TWI3-SCK/I2S2-DIN0/I2S2-DOUT1/PCIE0-WAKEN/PH-EINT12
PH13 [25,26]	B15 PH13	PH13/TWI3-SDA/I2S3-MCLK/RGMII0-EPHY-25M/PH-EINT13
PH14 [25,26]	E14 PH14	PH14/I2S3-BCLK/RGMII0-RXD3/RMII0-NULL/PH-EINT14
PH15 [25,26]	D14 PH15	PH15/I2S3-LRCK/RGMII0-RXD2/RMII0-NULL/PH-EINT15
DDR-PARA-SEL-GPIO1 [13]	B14	PH16/I2S3-DOUT0/I2S3-DIN1/RGMII0-RXCK/RMII0-NULL/CLK-FANOUT0/PH-EINT16
DDR-PARA-SEL-GPIO [13]	B13	PH17/I2S3-DOUT1/I2S3-DIN0/RGMII0-TXD3/RMII0-NULL/PH-EINT17
LCD-BL-EN [15,23]	A14 PH18	PH18/IR-TX/I2S3-DOUT2/I2S3-DIN2/RGMII0-TXD2/RMII0-NULL/PH-EINT18
PH19 [11,23,25,26]	C13 PH19	PH19/IR-RX/I2S3-DOUT3/I2S3-DIN3/LEDC/PCIE0-CLKREQN/PH-EINT19
	L15 (130mA)	VCC-IO

Line Order

LVDS	MIPI-DSI
LVDS-D0P	DSI-D0P
LVDS-D0N	DSI-D0N
LVDS-D1P	DSI-D1P
LVDS-D1N	DSI-D1N
LVDS-D2P	DSI-CKP
LVDS-D2N	DSI-CKN
LVDS-CKP	DSI-D2P
LVDS-CKN	DSI-D2N
LVDS-D3P	DSI-D3P
LVDS-D3N	DSI-D3N

Serial port data signal needs to be reversed.

A527

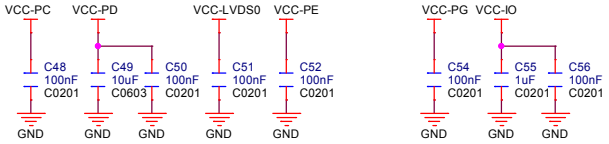

GPIO use gide:
1.Note that the voltage of SOC GPIO must matches the external IO voltage.
2.The pull up voltage of the GPIO is selected to correspond to the power field voltage of GPIO.
3.Power current is PCB layout reference minimum.

AllWinner Technology Co.,Ltd	
Design Name	A527-STD-AXP717C-LPDDR4-4X-32X1
Size A3	Page Name 11 A527 GPIO1
Rev	
Date: Wednesday, May 08, 2024	Sheet 11 of 27

GPIO

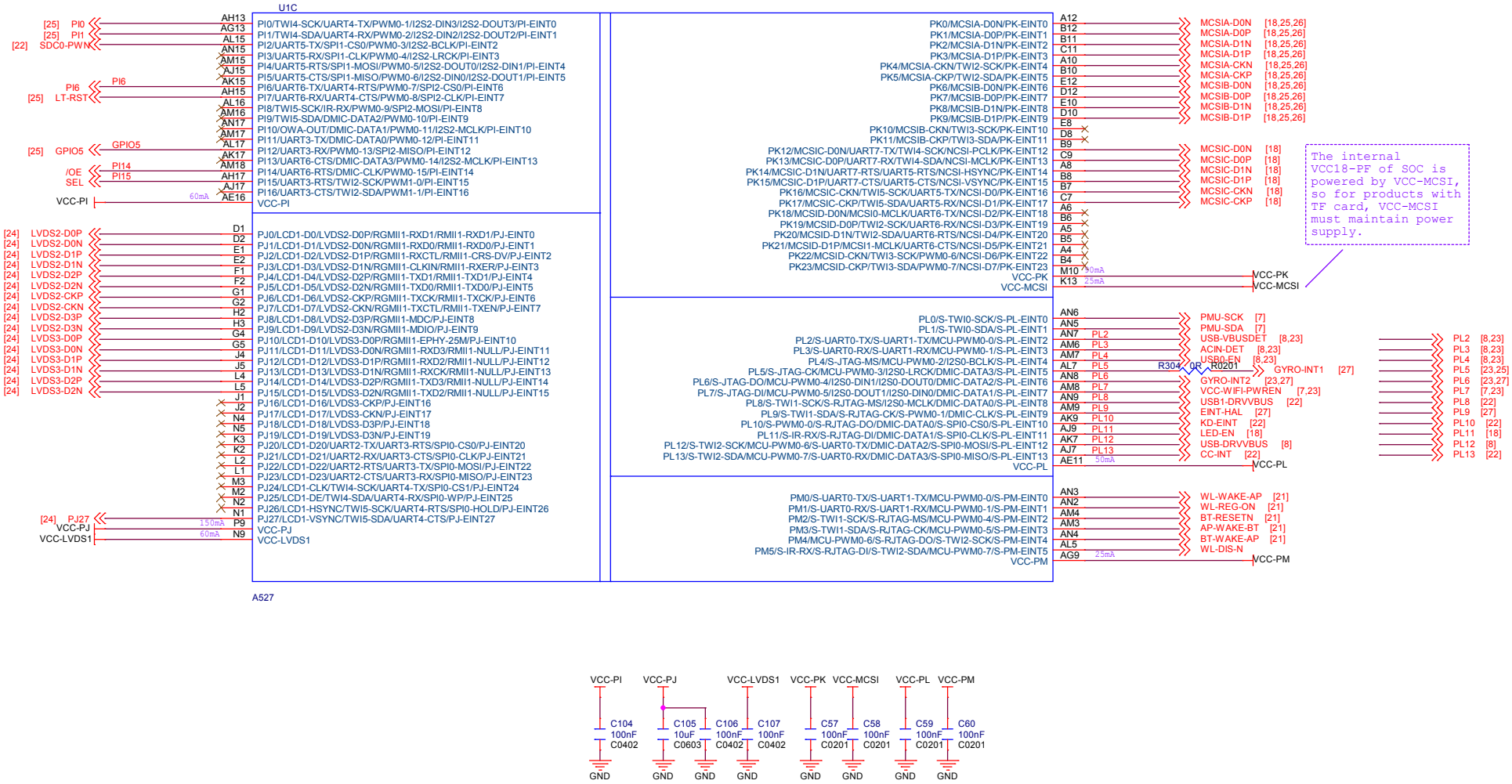

AllWinner Technology Co.,Ltd			
Design Name	A527-STD-AXP717C-LPDDR4-4X-32X1		
Size A3	Page Name 12 A527 GPIO2		Rev
Date: Tuesday, June 11, 2024	Sheet 12 of 27		

Audio&ADC

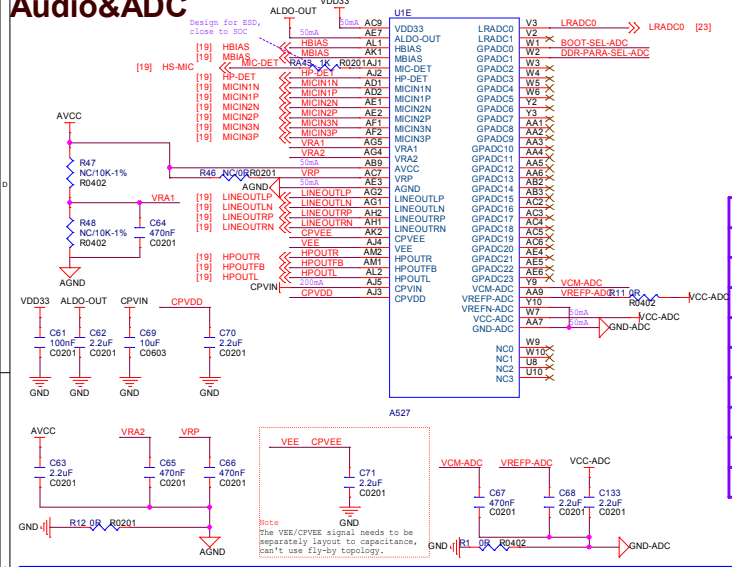

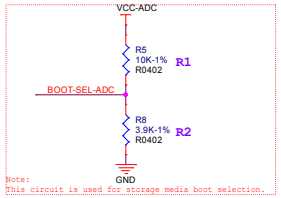

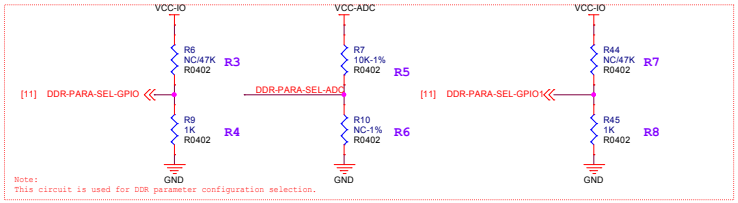

NO.	R1	R2	Boot Select type
1	NC	10K	SMHC0->MLC NAND->SLC NAND->try(except SPI in PJ)
2	10K	1K	SMHC0->SLC NAND->MLC NAND->try(except SPI in PJ)
3	10K	2K2	SMHC0->EMMC_USER->EMMC_BOOT->try(except SPI in PJ)
4	10K	3K9	SMHC0->EMMC_BOOT->EMMC_USER->try(except SPI in PJ)
5	6K8	4K7	SMHC0->SPI NOR->try(except SPI in PJ)
6	6K8	6K8	SMHC0->SPI NAND->try(except SPI in PJ)
7	4K3	6K8	SMHC0->SPI NOR in PJ->try
8	2K2	10K	SMHC0->SPI NAND in PJ->try
9	10K	NC	Reserved

try default order:(selected fail media will not try)
EMMC_USER->EMMC_BOOT->SLC NAND->MLC NAND->SPI NOR->SPI NAND

GPIO Level(Set by the R7 pull-up and R8 pull-down resistance of PH16 GPIO)	GPIO Level(Set by the R3 pull-up and R4 pull-down resistance of PH17 GPIO)	GPADC Voltage(Fixed pull-up R5 is 10K-1%,Set the voltage by adjusting pull-down resistor R6)	DDR PARA
0	0	163mV(1K-1%)	DDR PARA 0
0	0	382mV(2.7K-1%)	DDR PARA 1
0	0	608mV(5.1K-1%)	DDR PARA 2
0	0	811mV(8.2K-1%)	DDR PARA 3
0	0	1050mV(14K-1%)	DDR PARA 4
0	0	1315mV(27K-1%)	DDR PARA 5
0	0	1569mV(68K-1%)	DDR PARA 6
0	0	1800mV(NC)	DDR PARA 7
0	1	163mV(1K-1%)	DDR PARA 8
0	1	382mV(2.7K-1%)	DDR PARA 9
0	1	608mV(5.1K-1%)	DDR PARA 10
0	1	811mV(8.2K-1%)	DDR PARA 11
0	1	1050mV(14K-1%)	DDR PARA 12
0	1	1315mV(27K-1%)	DDR PARA 13
0	1	1569mV(68K-1%)	DDR PARA 14
0	1	1800mV(NC)	DDR PARA 15
1	0	163mV(1K-1%)	DDR PARA 16
1	0	382mV(2.7K-1%)	DDR PARA 17
1	0	608mV(5.1K-1%)	DDR PARA 18
1	0	811mV(8.2K-1%)	DDR PARA 19
1	0	1050mV(14K-1%)	DDR PARA 20
1	0	1315mV(27K-1%)	DDR PARA 21
1	0	1569mV(68K-1%)	DDR PARA 22
1	0	1800mV(NC)	DDR PARA 23
1	1	163mV(1K-1%)	DDR PARA 24
1	1	382mV(2.7K-1%)	DDR PARA 25
1	1	608mV(5.1K-1%)	DDR PARA 26
1	1	811mV(8.2K-1%)	DDR PARA 27
1	1	1050mV(14K-1%)	DDR PARA 28
1	1	1315mV(27K-1%)	DDR PARA 29
1	1	1569mV(68K-1%)	DDR PARA 30
1	1	1800mV(NC)	DDR PARA 31

USB&EDP&PCIE

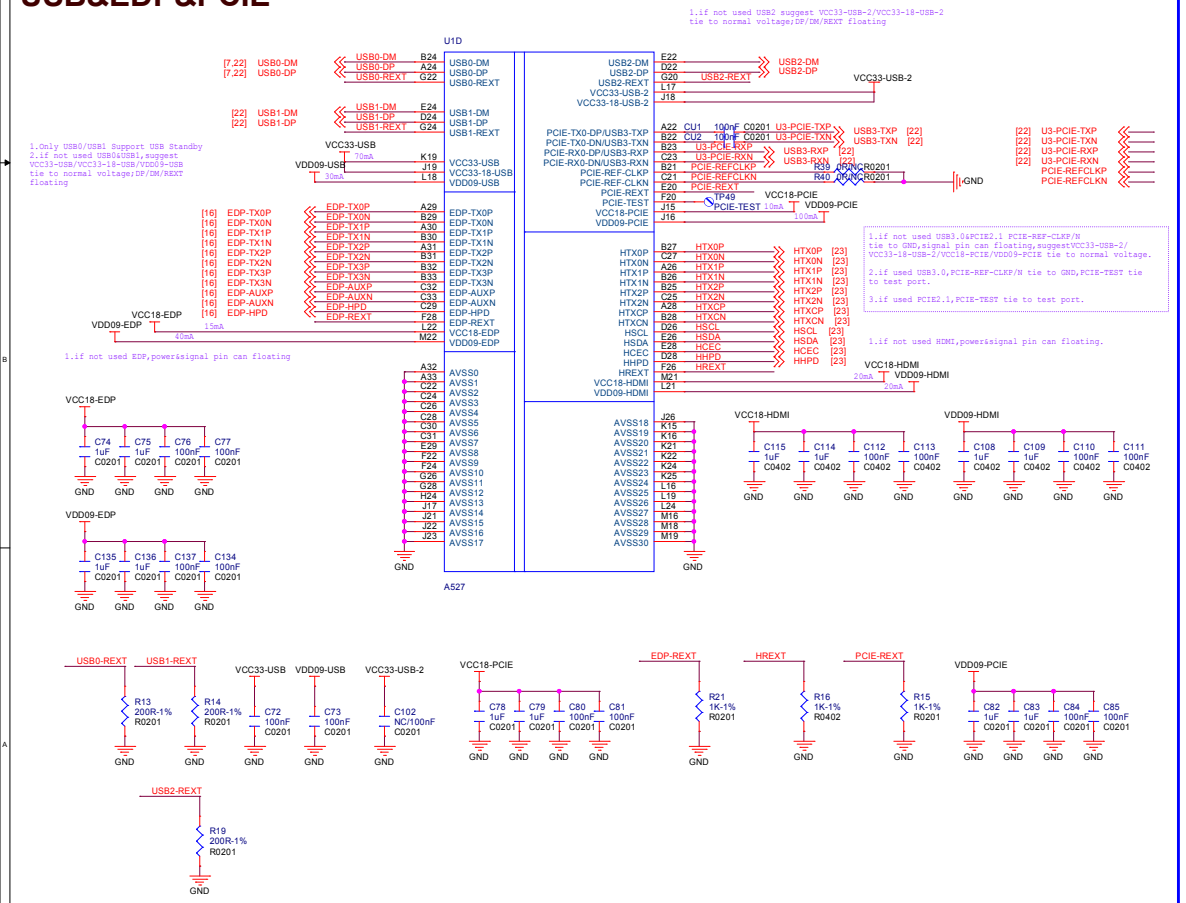

EMMC

Default:use EMMC

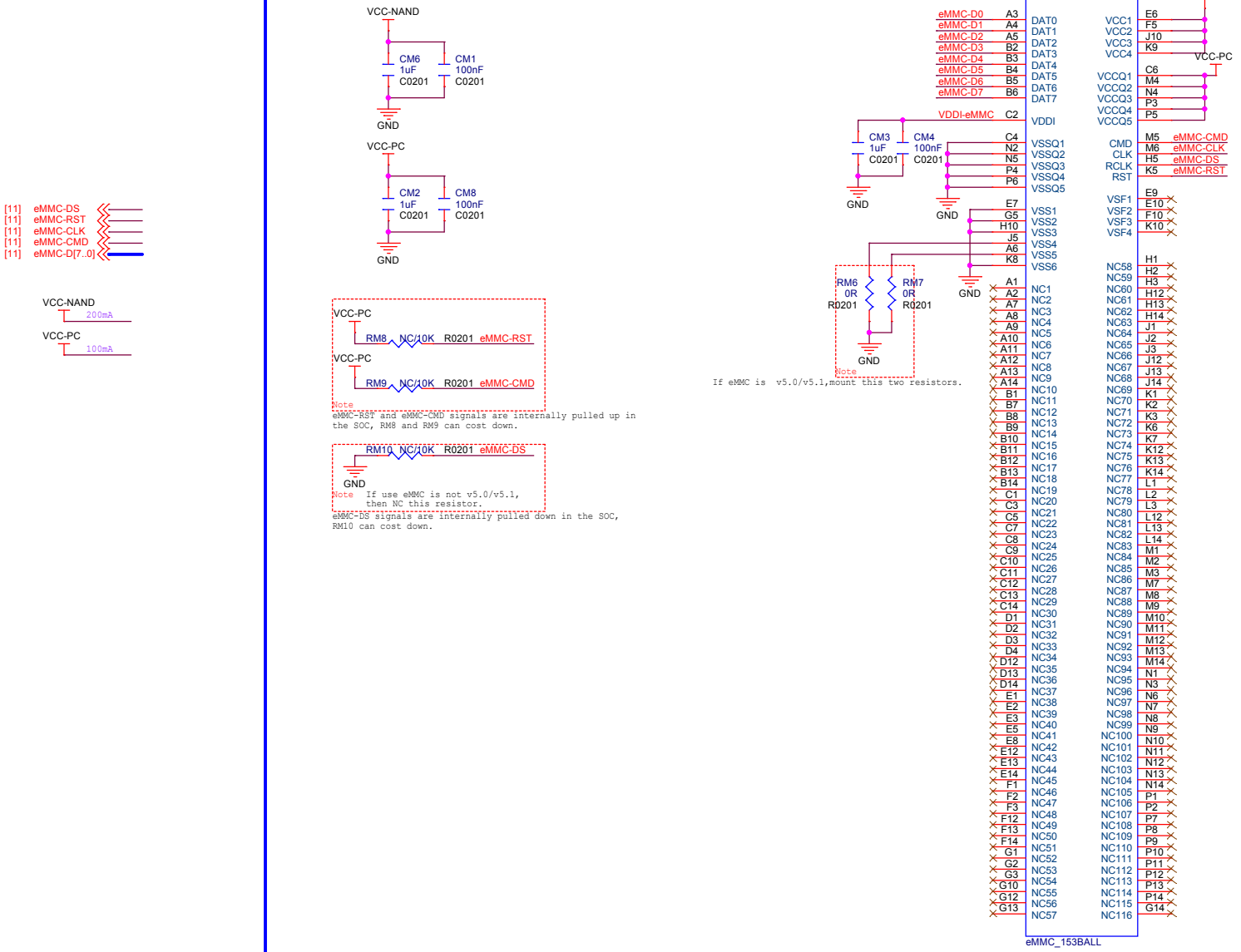

AllWinner Technology Co.,Ltd			
Design Name	A527-STD-AXP717C-LPDDR4-4X-32X1		
Size A3	Page Name 14 EMMC		Rev
Date: Wednesday, May 08, 2024	Sheet 14 of 27		

LCD

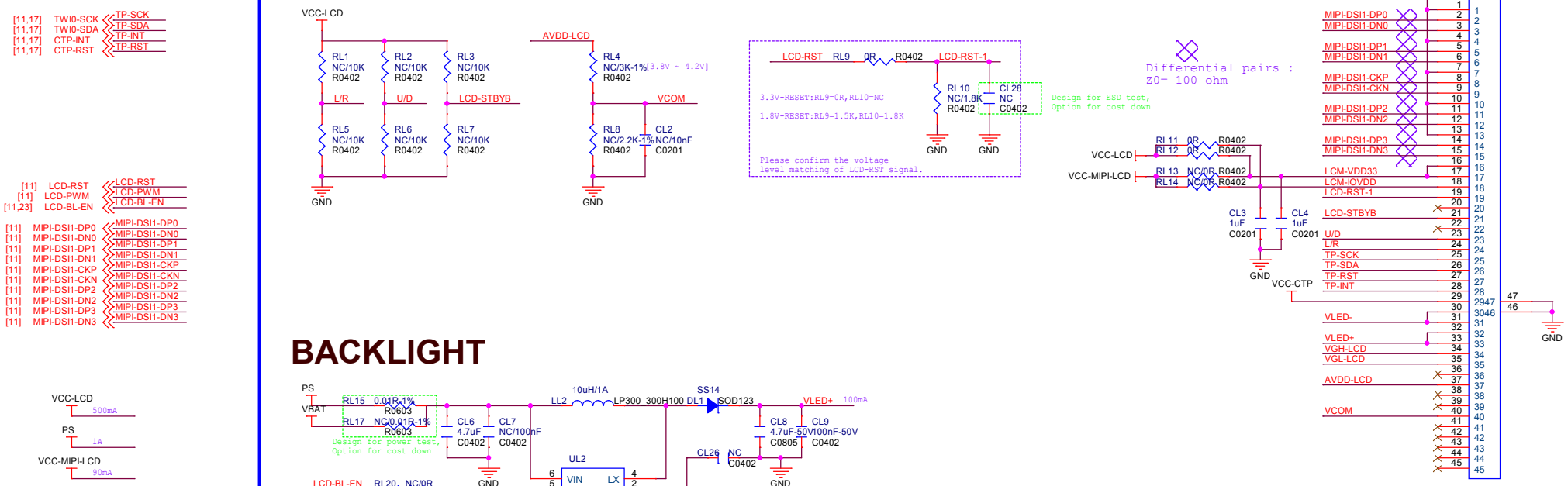

BACKLIGHT

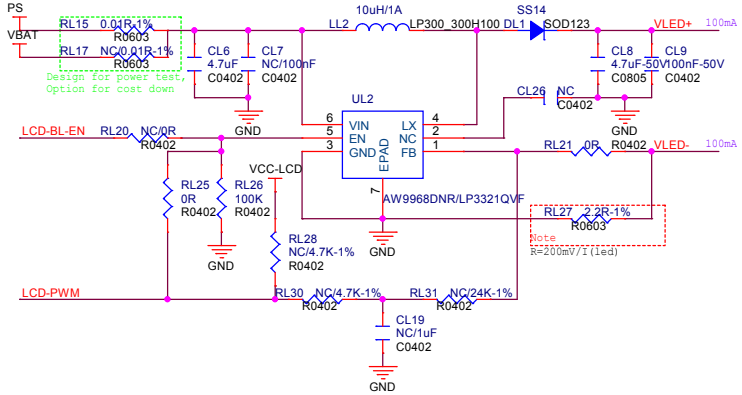

Default: SQ101D-Q5DI404-84H501(1200*1920)
Compatible 800*1280
设计软排线转接和兼容

LCD POWER For 800*1280

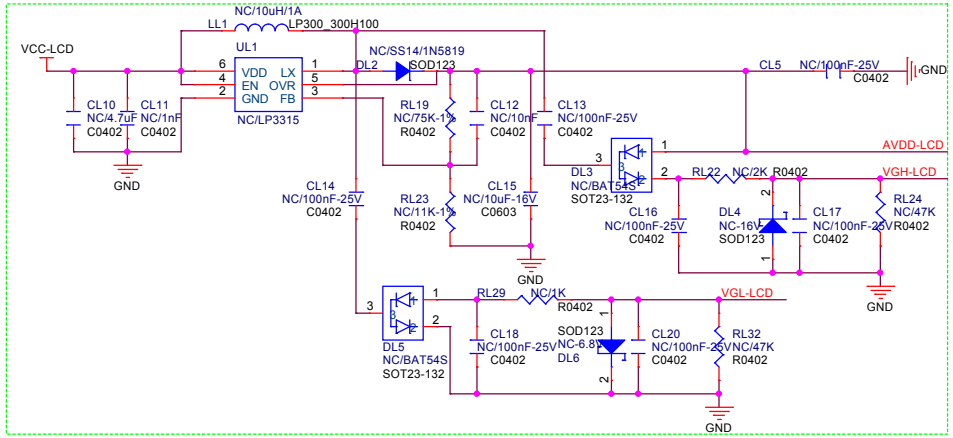

AllWinner Technology Co.,Ltd		
Design Name: A527-STD-AXP717C-LPDDR4-4X-32X1		
Size: A3	Page Name: 15 MIPI LCM	Rev
Date: Wednesday, May 08, 2024	Sheet 15 of 27	

RGB-VGA

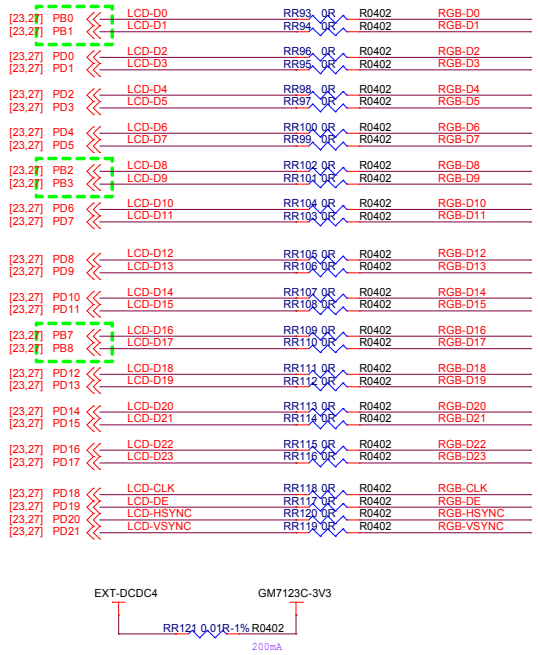

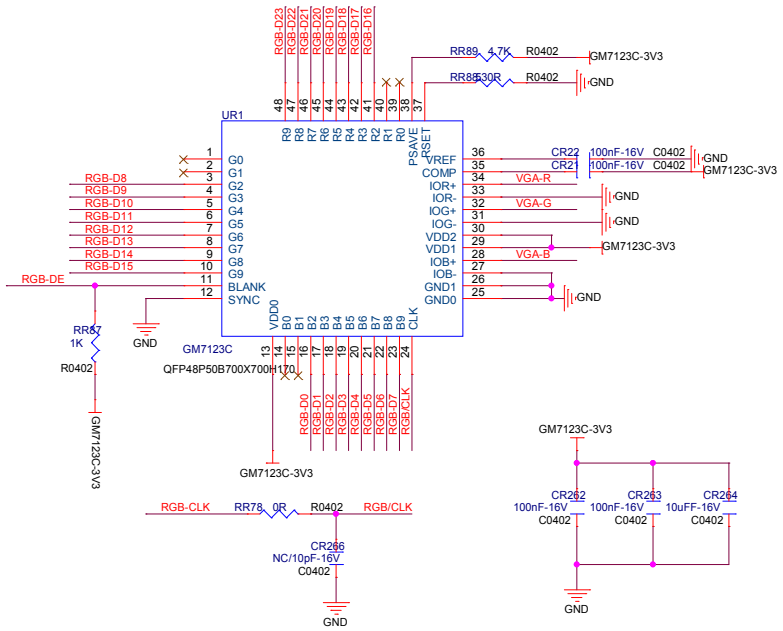

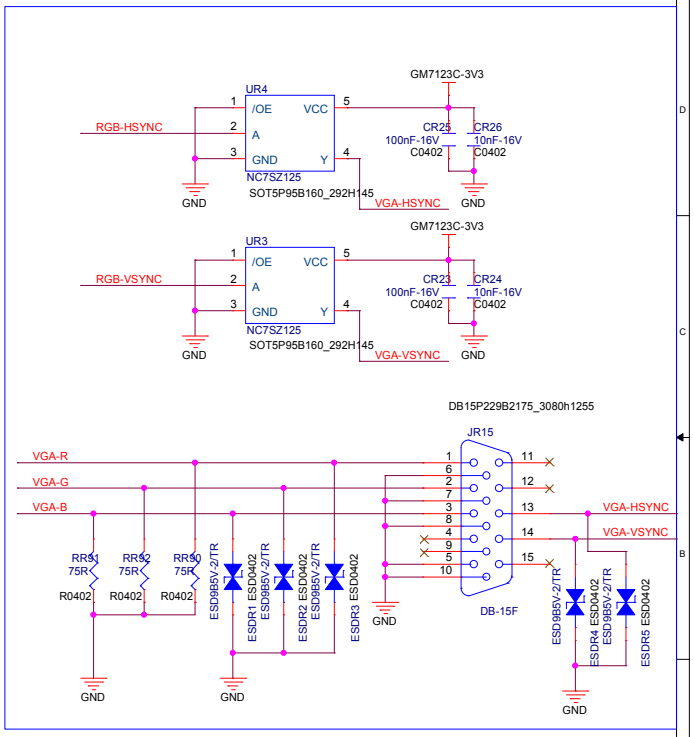

AllWinner Technology Co.,Ltd	
Design Name	A527-STD-AXP717C-LPDDR4-4X-32X1
Size Custom	Page Name 15 RGB-VGA
Rev	
Date: Wednesday, May 08, 2024	Sheet 15 of 27

EDP LCM

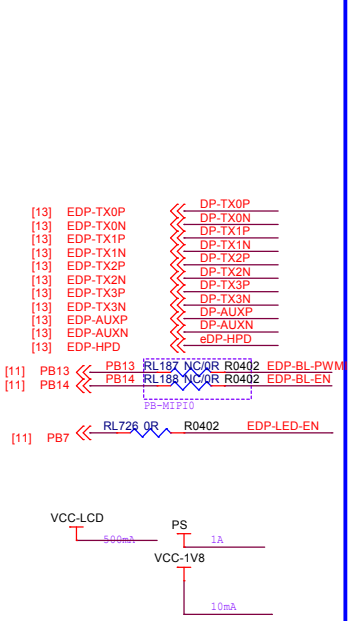

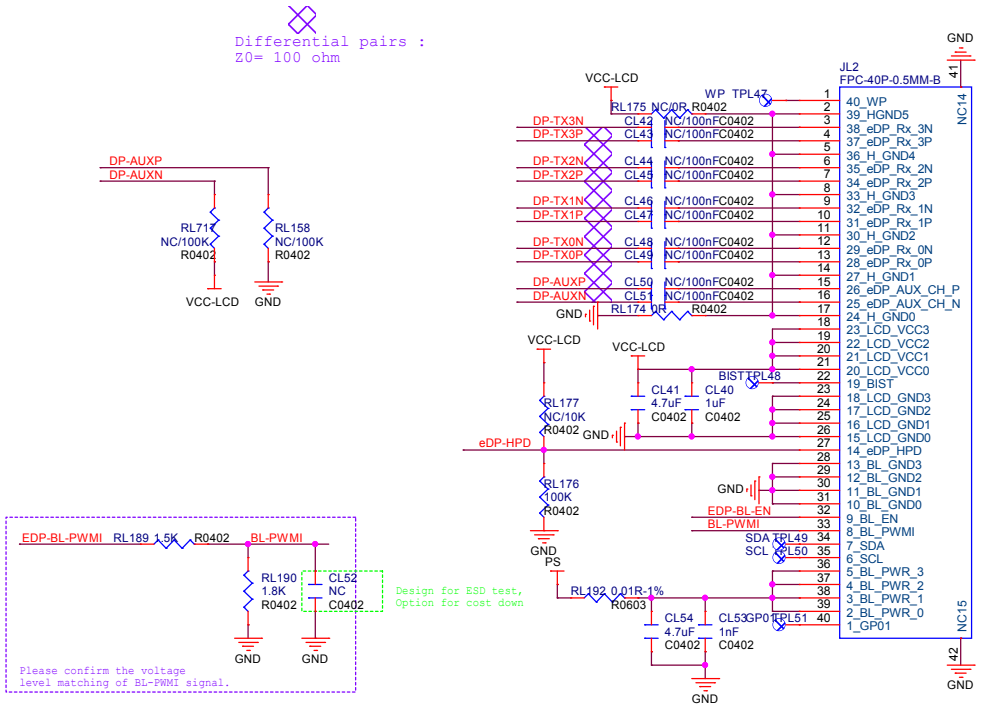

Default: VVX10T025 2560x1600

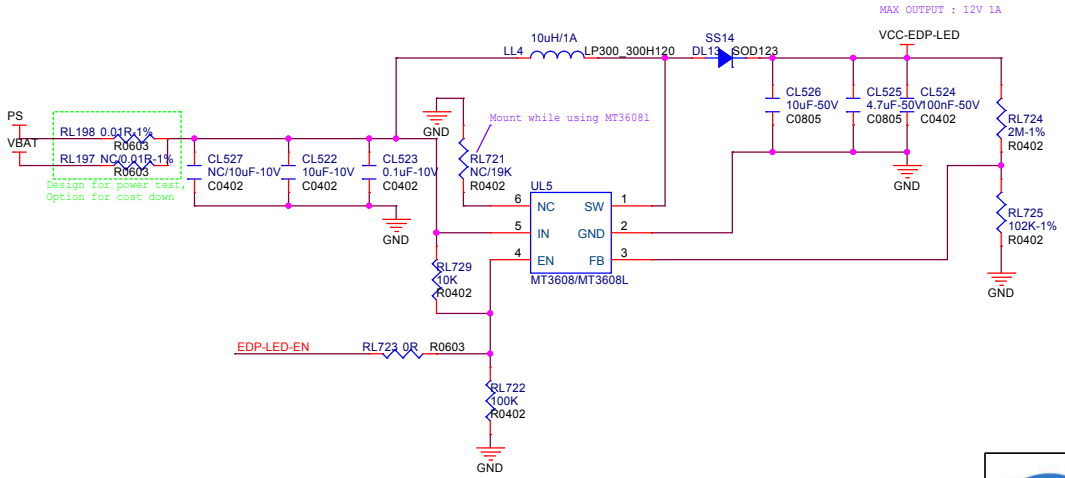

AllWinner Technology Co.,Ltd		
Design Name	A527-STD-AXP717C-LPDDR4-4X-32X1	
Size A3	Page Name 16 EDP LCM	Rev
Date: Wednesday, May 08, 2024	Sheet 16 of 27	

EDP LCM

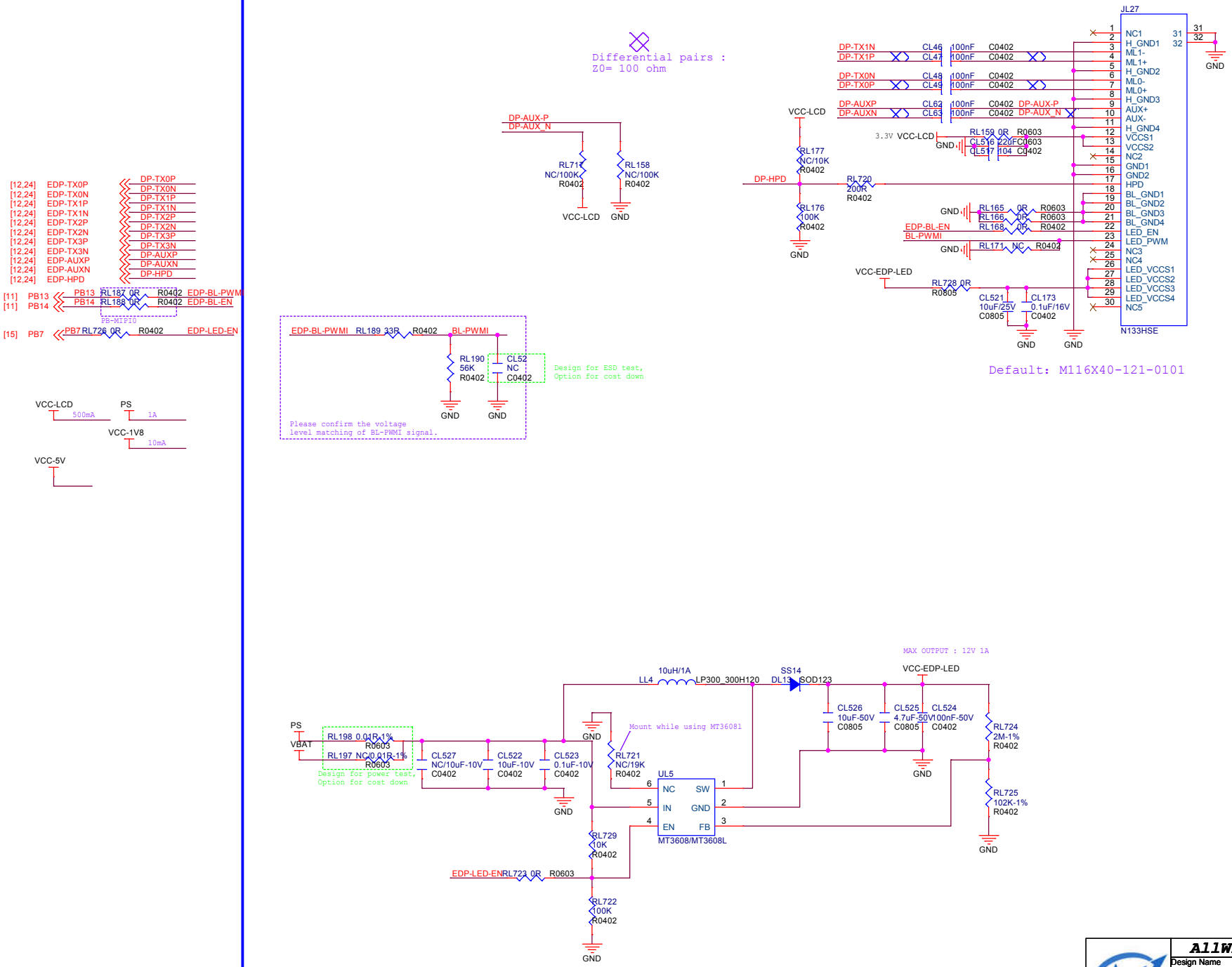
Differential pairs :
Z0= 100 ohm
JL27
N133HSE
Default: M116X40-121-0101
DP-AUX-P
DP-AUX_N
RL711 NC/100K R0402
RL158 NC/100K R0402
VCC-LCD
GND
DP-HPD
RL720 200R R0402
RL177 NC/10K R0402
RL176 100K R0402
EDP-BL-EN
BL-PWMI
VCC-EDP-LED
RL728 0R R0805
CL521 10uF/25V C0805
CL173 0.1uF/16V C0402
EDP-BL-PWMI
RL189 33R R0402
RL190 56K R0402
CL52 NC C0402
Design for ESD test, Option for cost down
Please confirm the voltage level matching of BL-PWMI signal.
PS
VBAT
RL198 0.01R-1% R0603
RL197 NC/0.01R-1% R0603
Design for power test, Option for cost down
CL527 NC/10uF-10V C0402
CL522 10uF-10V C0402
CL523 0.1uF-10V C0402
RL721 NC/19K R0402
Mount while using MT36081
UL5
MT3608/MT3608L
LL4 10uH/1A LP300_300H120
DL13 SS14 SOD123
MAX OUTPUT : 12V 1A
CL526 10uF-50V C0805
CL525 4.7uF-50V C0805
CL524 100nF-50V C0402
RL724 2M-1% R0402
RL725 102K-1% R0402
RL729 10K R0402
EDP-LED-EN
RL723 0R R0603
RL722 100K R0402
[12,24] EDP-TX0P
[12,24] EDP-TX0N
[12,24] EDP-TX1P
[12,24] EDP-TX1N
[12,24] EDP-TX2P
[12,24] EDP-TX2N
[12,24] EDP-TX3P
[12,24] EDP-TX3N
[12,24] EDP-AUXP
[12,24] EDP-AUXN
[12,24] EDP-HPD
[11] PB13
[11] PB14
PB-MIPI
[15] PB7
EDP-LED-EN
VCC-LCD 500mA
PS 1A
VCC-1V8 10mA
VCC-5V

CTP

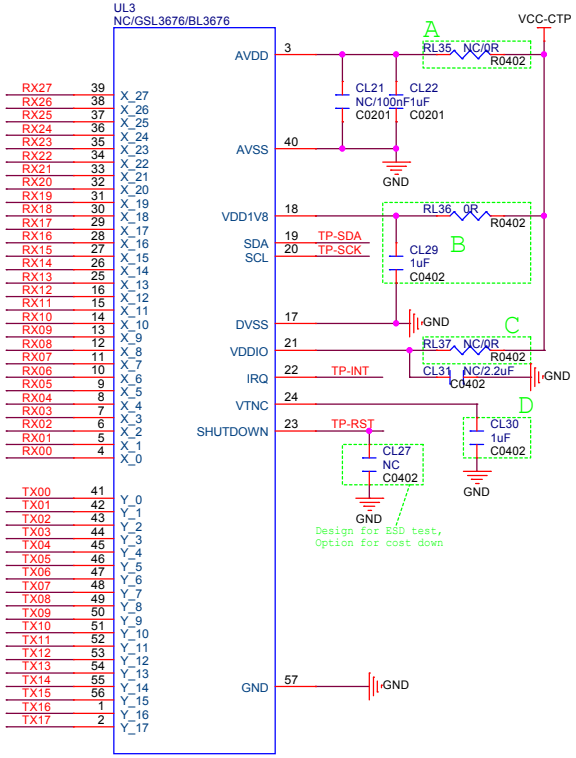

Default: GSL3676

Circuit	GSL3676	BL3676
A	0R	NC
B	NC	Mount
C	0R	NC
D	NC	1uF

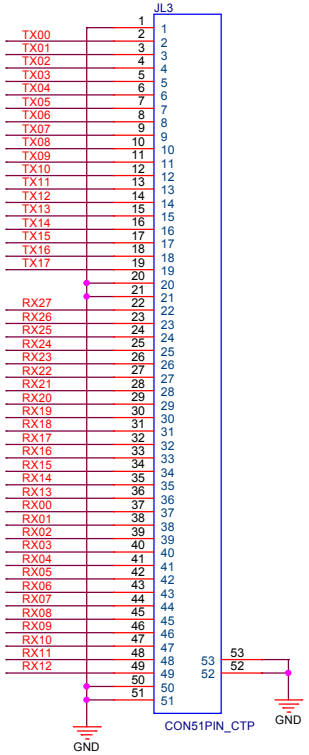

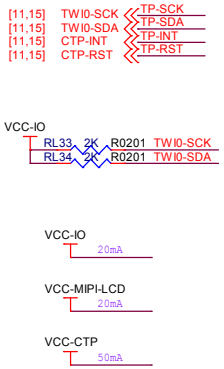

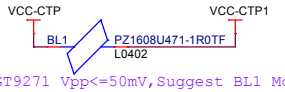

GT9271 Vpp<=50mV,Suggest BL1 Mount

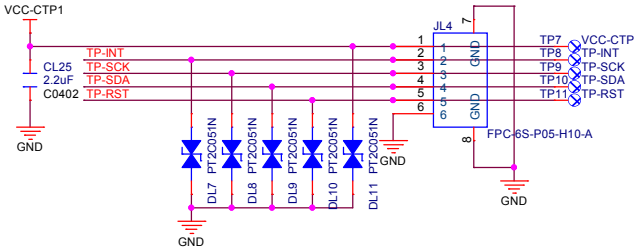

CAMERA

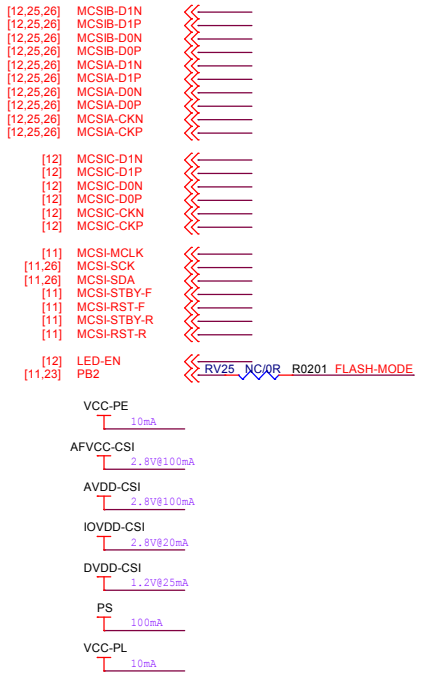

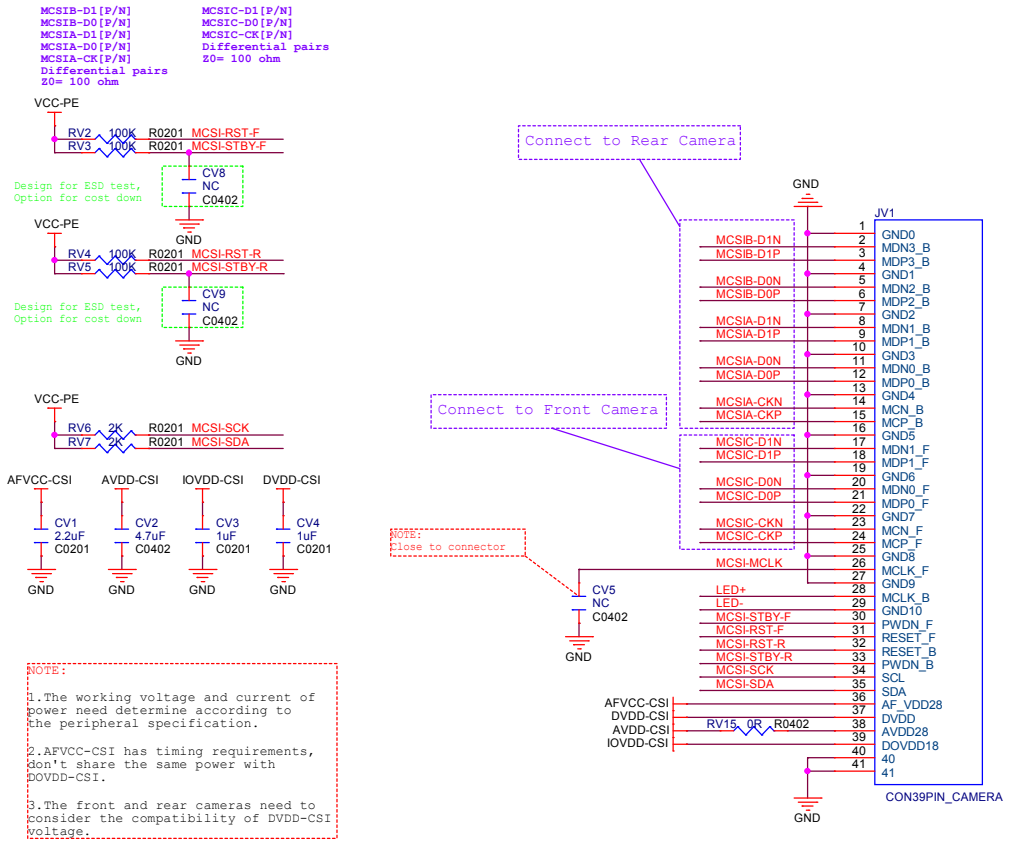

FLASH_LED

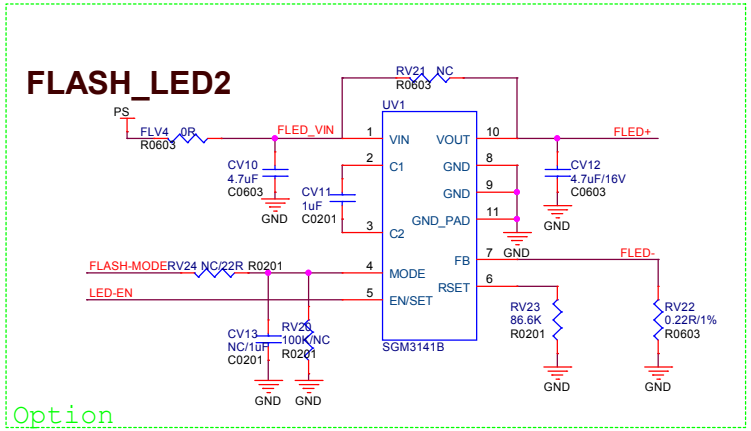

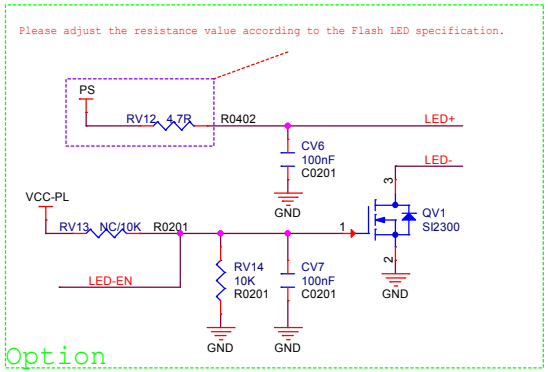

AllWinner Technology Co.,Ltd		
Design Name	A527-STD-AXP717C-LPDDR4-4X-32X1	
Size A3	Page Name 18 CAMERA	Rev
Date: Wednesday, May 08, 2024	Sheet 18 of 27	

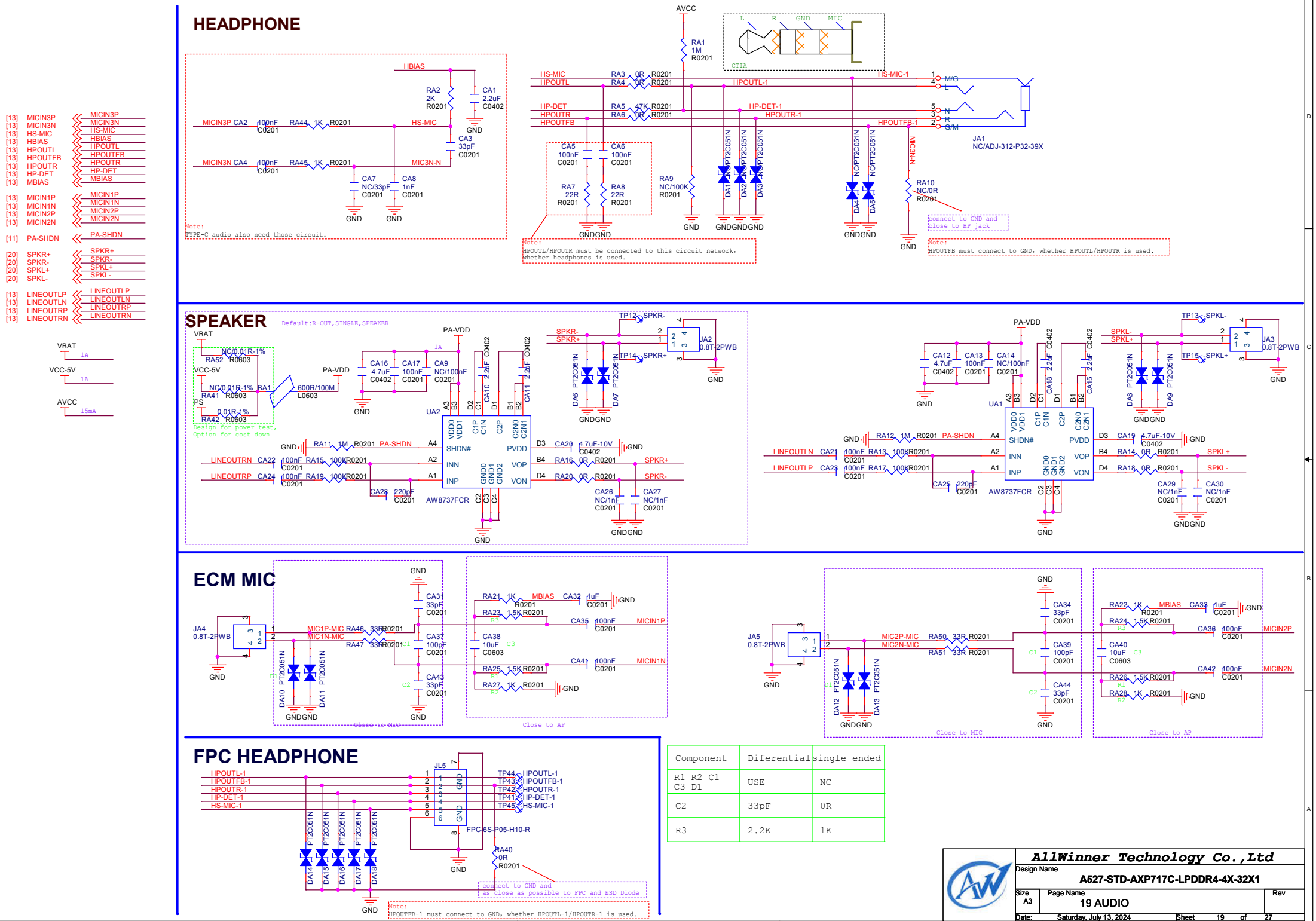

Component	Diferential	single-ended
R1 R2 C1 C3 D1	USE	NC
C2	33pF	0R
R3	2.2K	1K

AllWinner Technology Co.,Ltd

Design Name: A527-STD-AXP717C-LPDDR4-4X-32X1

Size: A3 | Page Name: 19 AUDIO | Rev

Date: Saturday, July 13, 2024 | Sheet 19 of 27

DMIC

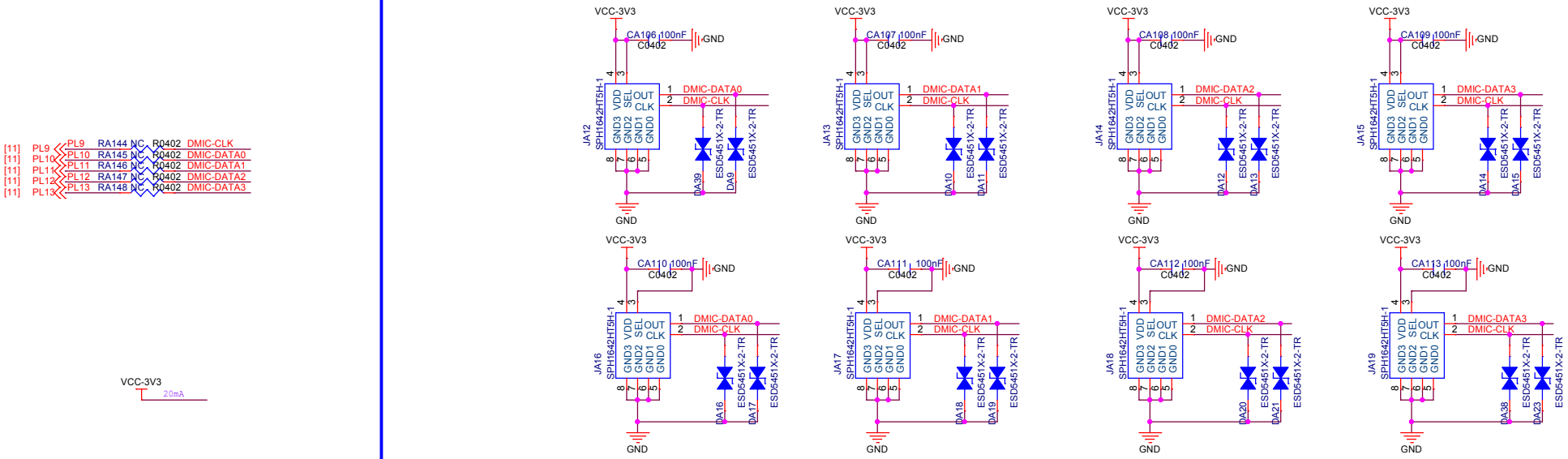

MEMS AMIC

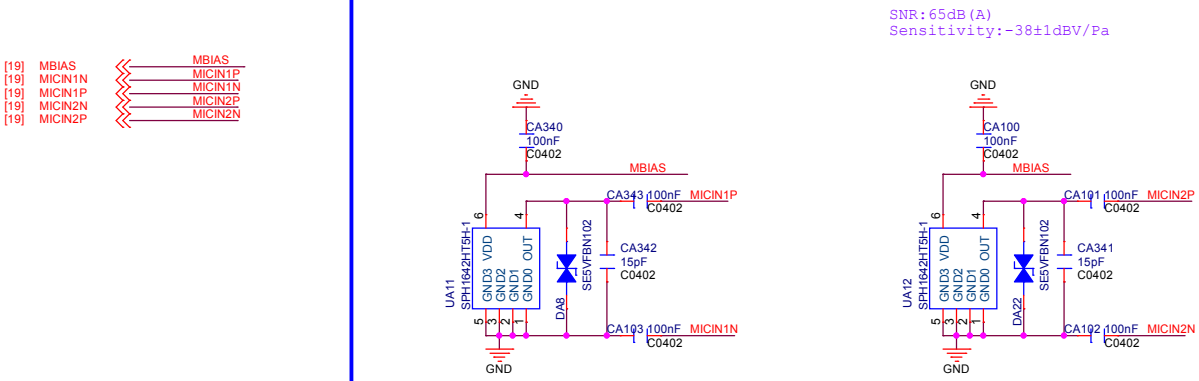

Digital reserve port

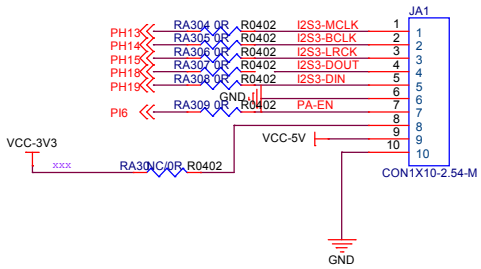

AllWinner Technology Co.,Ltd		
Design Name	A527-STD-AXP717C-LPDDR4-4X-32X1	
Size A3	Page Name 19-1 MEMS AMIC/Digital PA	Rev
Date: Wednesday, May 08, 2024	Sheet 19 of 27	

TYPEC Analog AUDIO

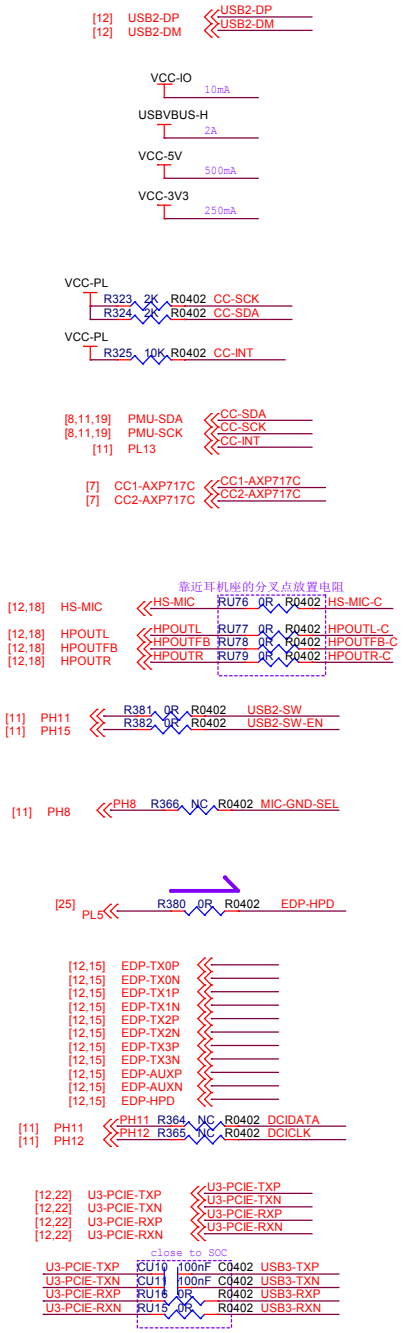

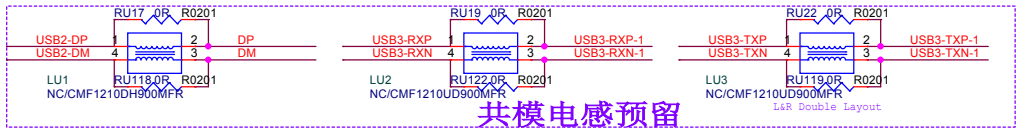

TYPE-C U2/AUDIO

MIC/GND SWITCH

Differential pairs :
Z0= 90 ohm

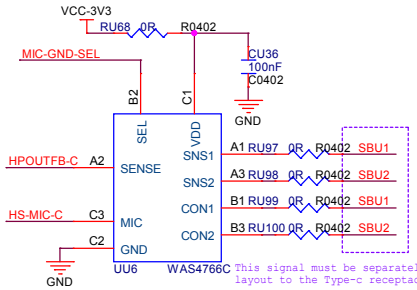

SEL	Function
0	GND=CON1, Sense=SNS1, MIC=SNS2
1	GND=CON2, Sense=SNS2, MIC=SNS1

USB/AUDIO SWITCH

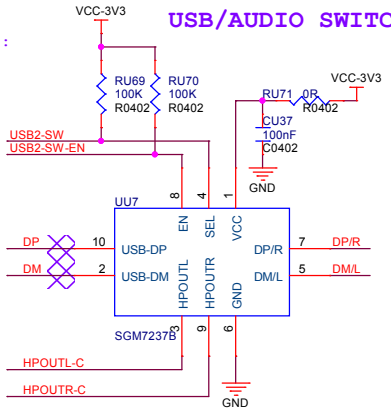

EN	SEL	DP/R and DM/L Function
0	X	No Connect
1	0	HPOUTR/HPOUTL
1	1	USB-DP/USB-DM

EDP1.3&USB3 SWITCH

Differential pairs :
Z0= 100 ohm

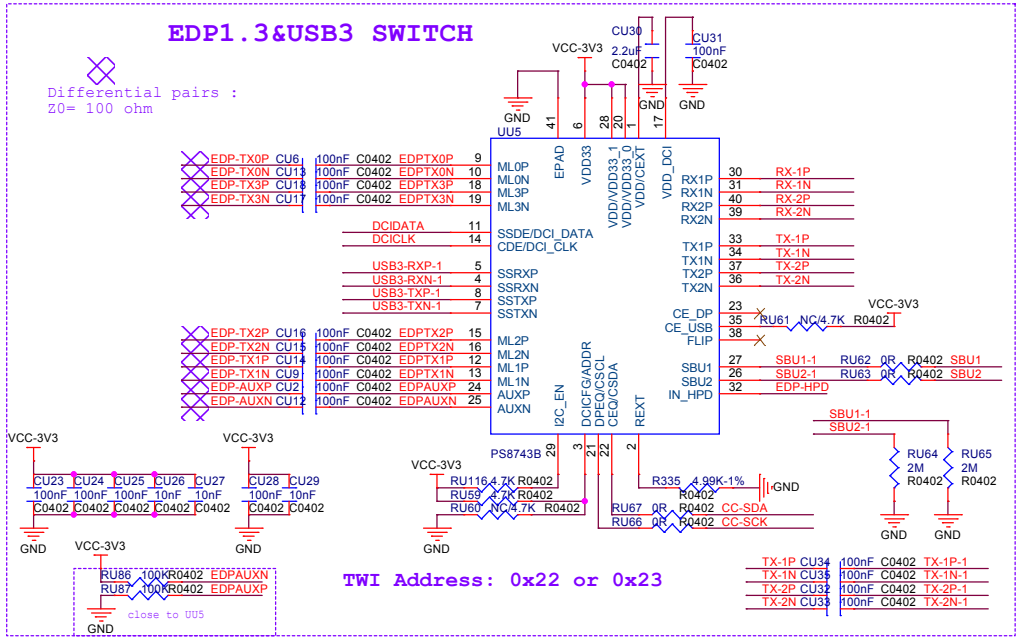

TWI Address: 0x22 or 0x23

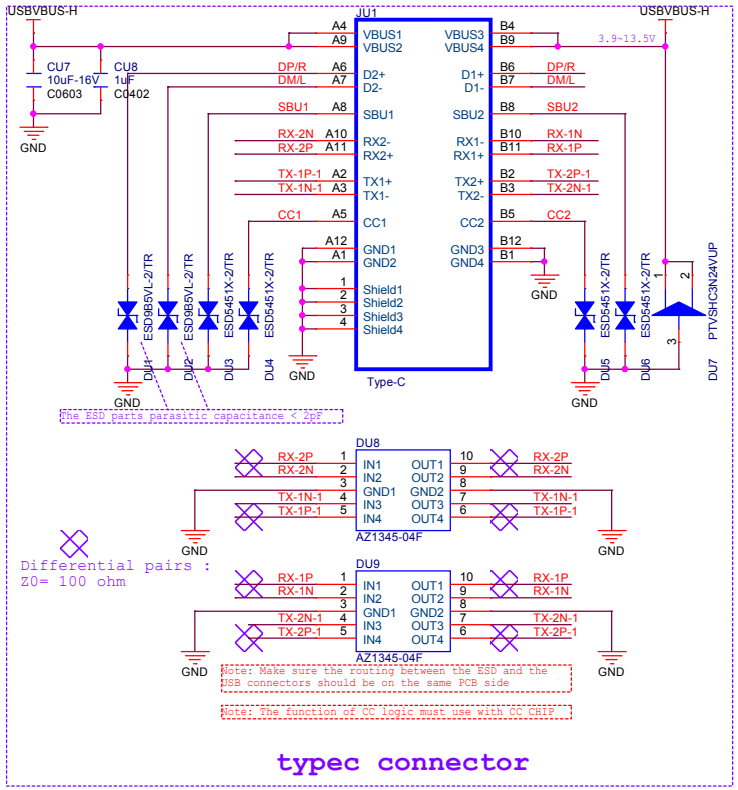

typec connector

CC logic

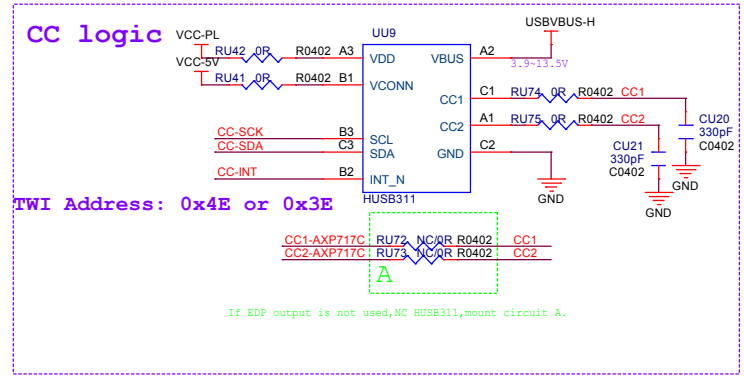

TWI Address: 0x4E or 0x3E

AllWinner Technology Co.,Ltd			
Design Name	A527-STD-AXP717C-LPDDR4-4X-32X1		
Size A3	Page Name 19 TYPEC DP/Analog AUDIO		Rev
Date: Saturday, July 13, 2024	Sheet 19 of 27		

Default:Use AC107

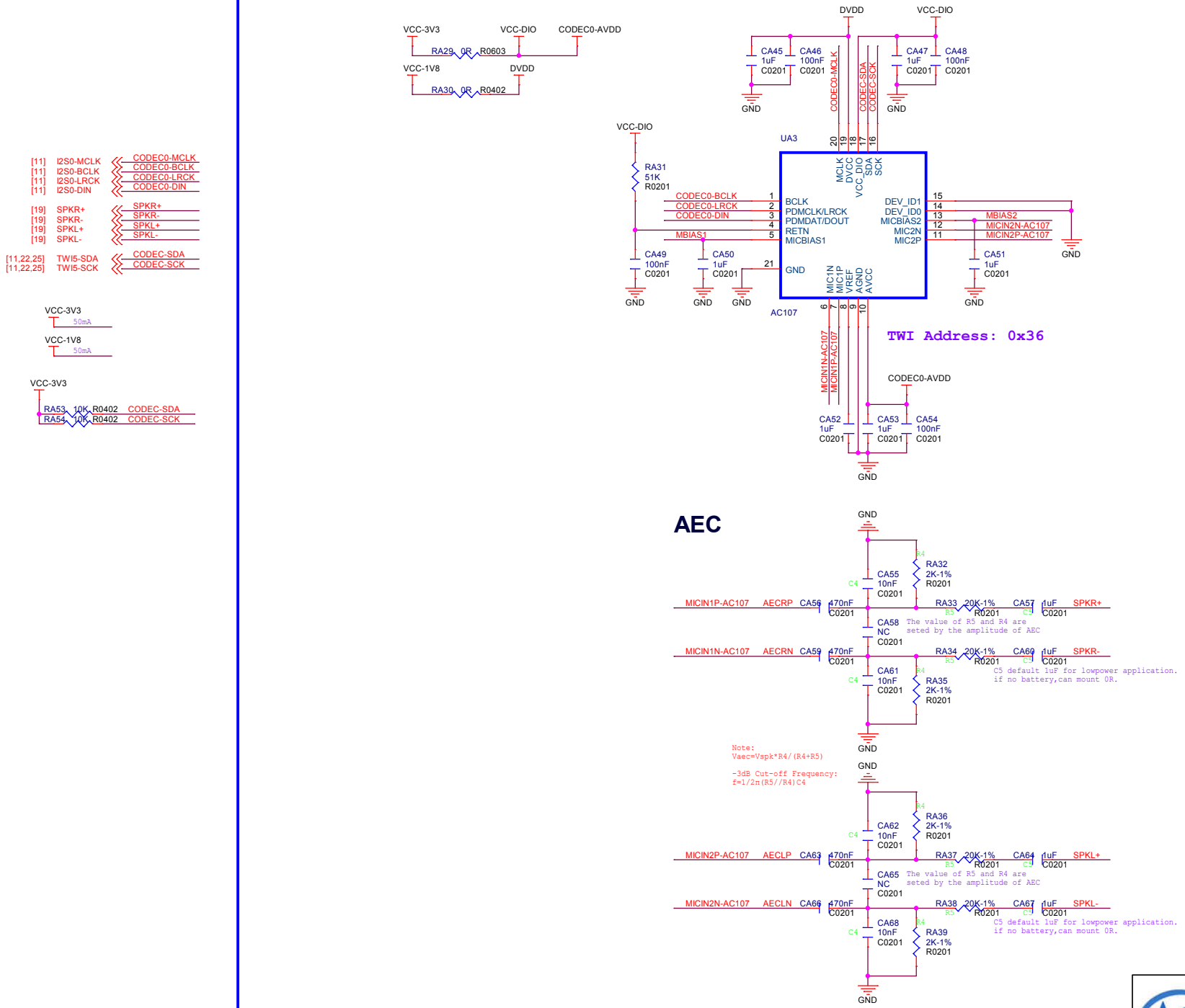

AllWinner Technology Co.,Ltd	
Design Name	A527-STD-AXP717C-LPDDR4-4X-32X1
Size A3	Page Name 20 AUDIO AC107
Rev	
Date: Saturday, July 13, 2024	Sheet 20 of 27

XR829 ON BOARD

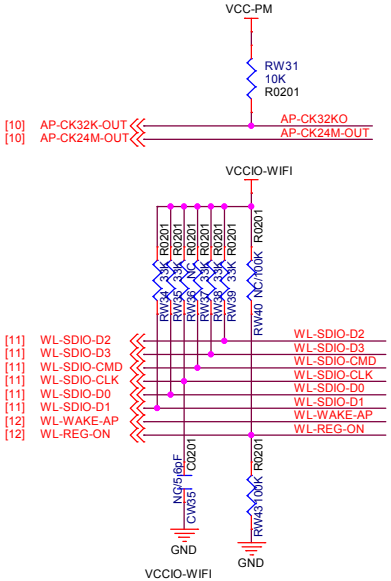

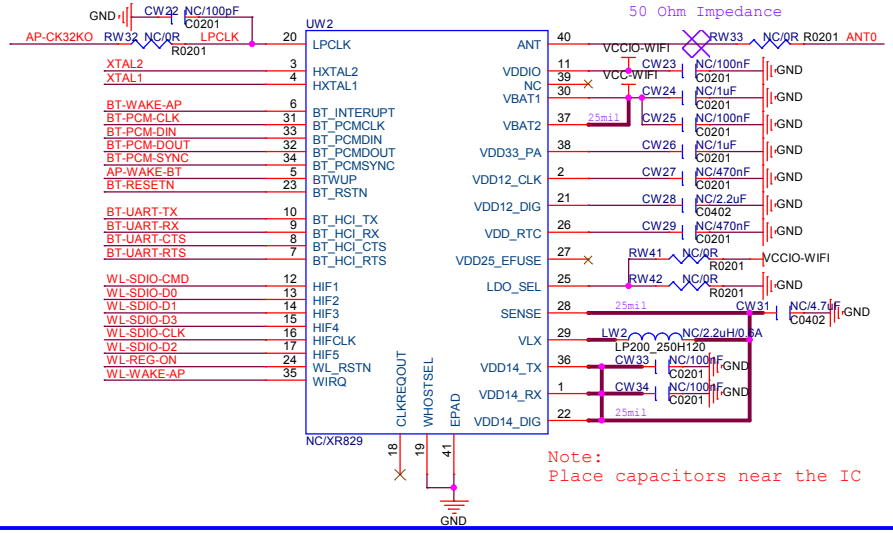

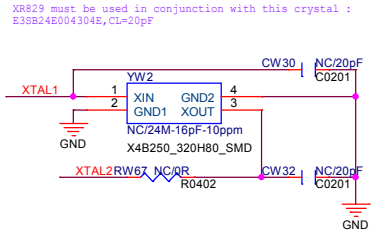

AW869X Default:AW869A

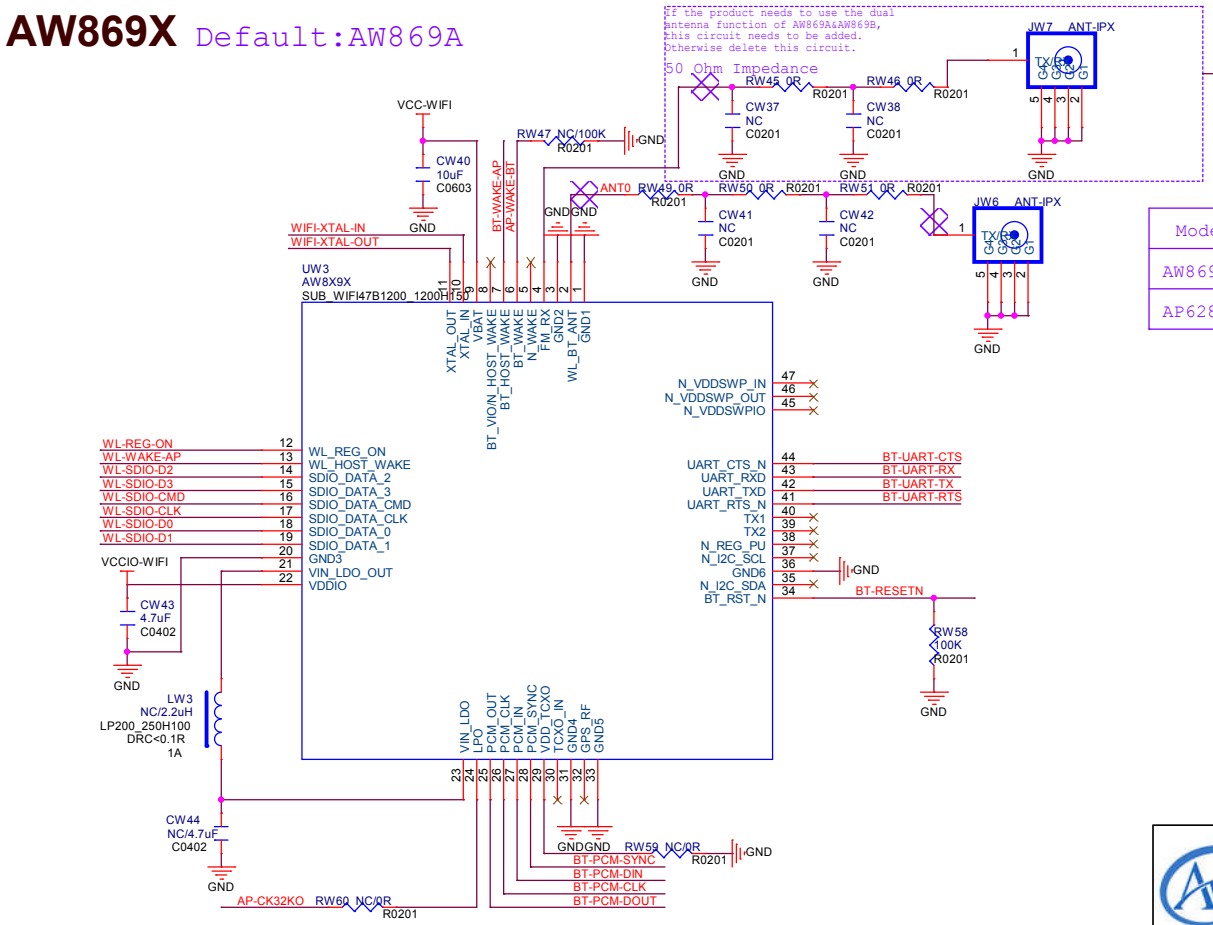

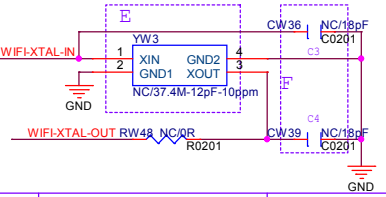

Model	E	F
AW869X	37.4M-12pF-10ppm	C3=C4=18pF
AP6281S	59.97M-9ppm-8pF	C3=C4=8pF

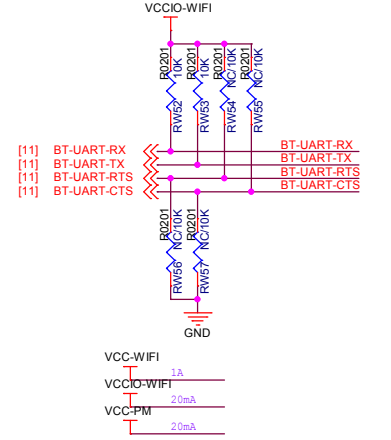

Model	Specifications	VCC-WIFI	VCCIO-WIFI
XR829	2.4G,BT4.2	2.7~5.5V @400mA	3.3/1.8V @10mA
AW869A	2.4G&5G,WiFi6,40MHz, BT5.2	3.3V@450mA	1.8V@xxxmA
AW869B	2.4G,WiFi6,40MHz, BT5.2	3.3V@350mA	1.8V@xxxmA
AW869C	2.4G&5G,WiFi6,80MHz, BT5.2	3.3V@xxxmA	1.8V@xxxmA
AP6281S	2.4G&5G,WiFi6E,80MHz, BT5.2	3.3V@1A	1.8V@xxxmA

AllWinner Technology Co.,Ltd

Design Name	A527-STD-AXP717C-LPDDR4-4X-32X1	
Size A3	Page Name 21 WIFI/BT AW869X	Rev
Date: Wednesday, May 08, 2024	Sheet 21 of 27	

AP6275P

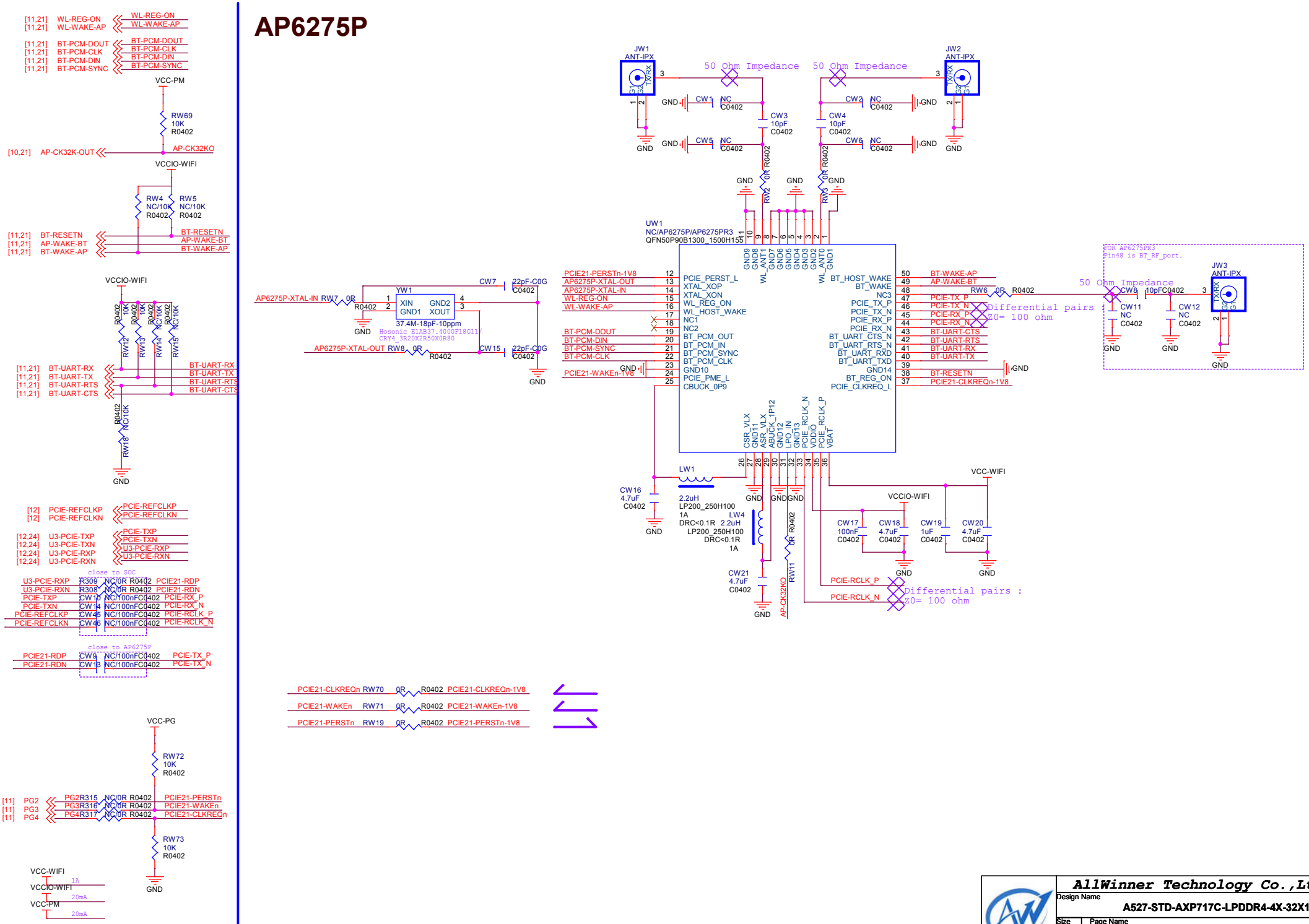

AllWinner Technology Co.,Ltd		
Design Name	A527-STD-AXP717C-LPDDR4-4X-32X1	
Size A3	Page Name 21-1 WIFI/BT PCIE AP6275P	Rev
Date: Wednesday, May 08, 2024	Sheet 21 of 27	

WiFi-BT 2T/2R

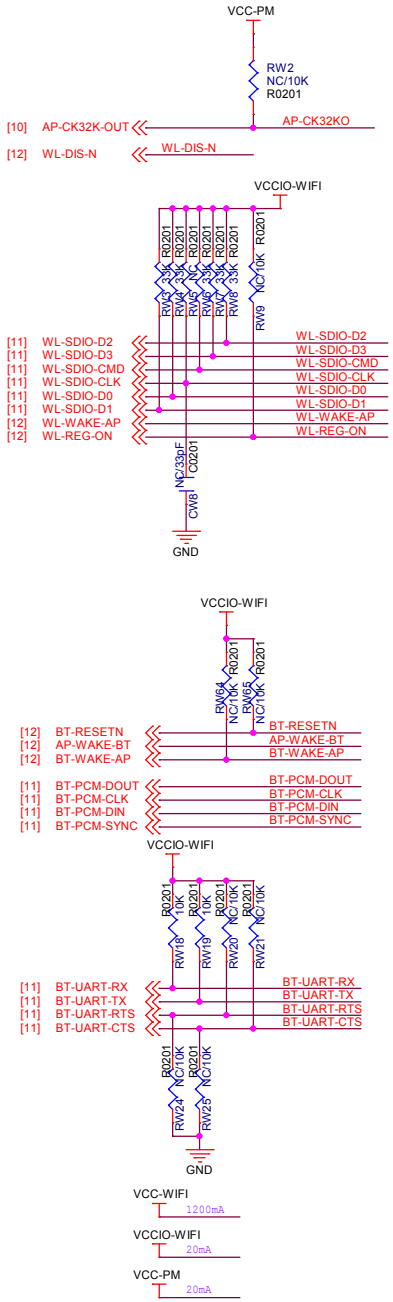

Model	Specifications	VCC-WIFI	VCCIO-WIFI
RTL8852BS	2.4G&5G,WiFi6,80MHz, BT5.2	3.3V@xxxmA	1.8V@xxxmA
AP6398S	2.4G&5G,WiFi6,80MHz, BT5.0	3.3V@1.2A	1.8V@20mA

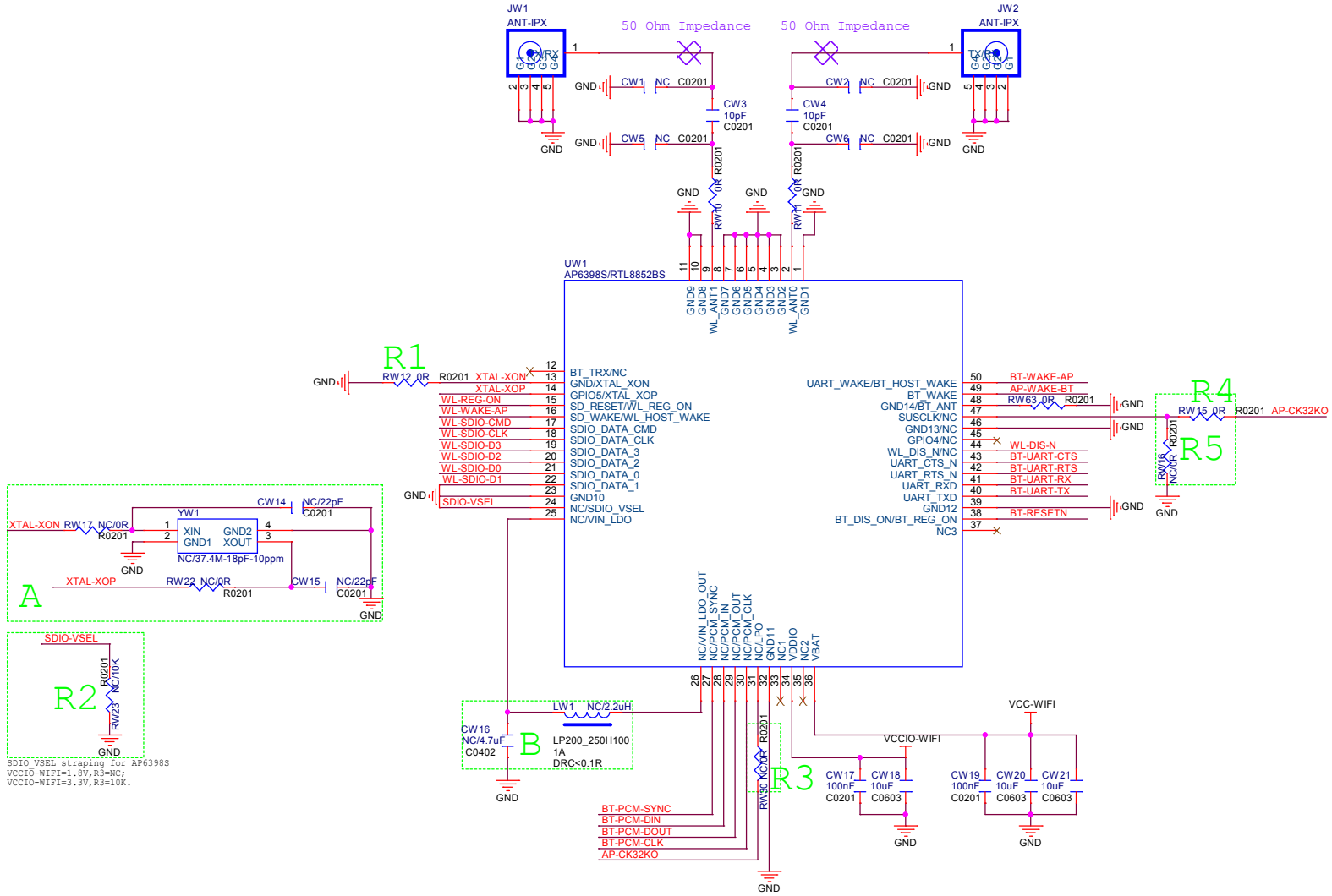

Model	A	B	R1	R2	R3	R4	R5
RTL8852BS	NC	NC	0R	NC	NC	0R	NC
AP6398S	Mount	Mount	NC	NC	0R	NC	0R

AllWinner Technology Co.,Ltd

Design Name: A527-STD-AXP717C-LPDDR4-4X-32X1

Size: A3 | Page Name: 21 WIFI/BT 2T/2R | Rev

Date: Wednesday, May 08, 2024 | Sheet 21 of 27

USB3.0 HOST&USB2.0 OTG

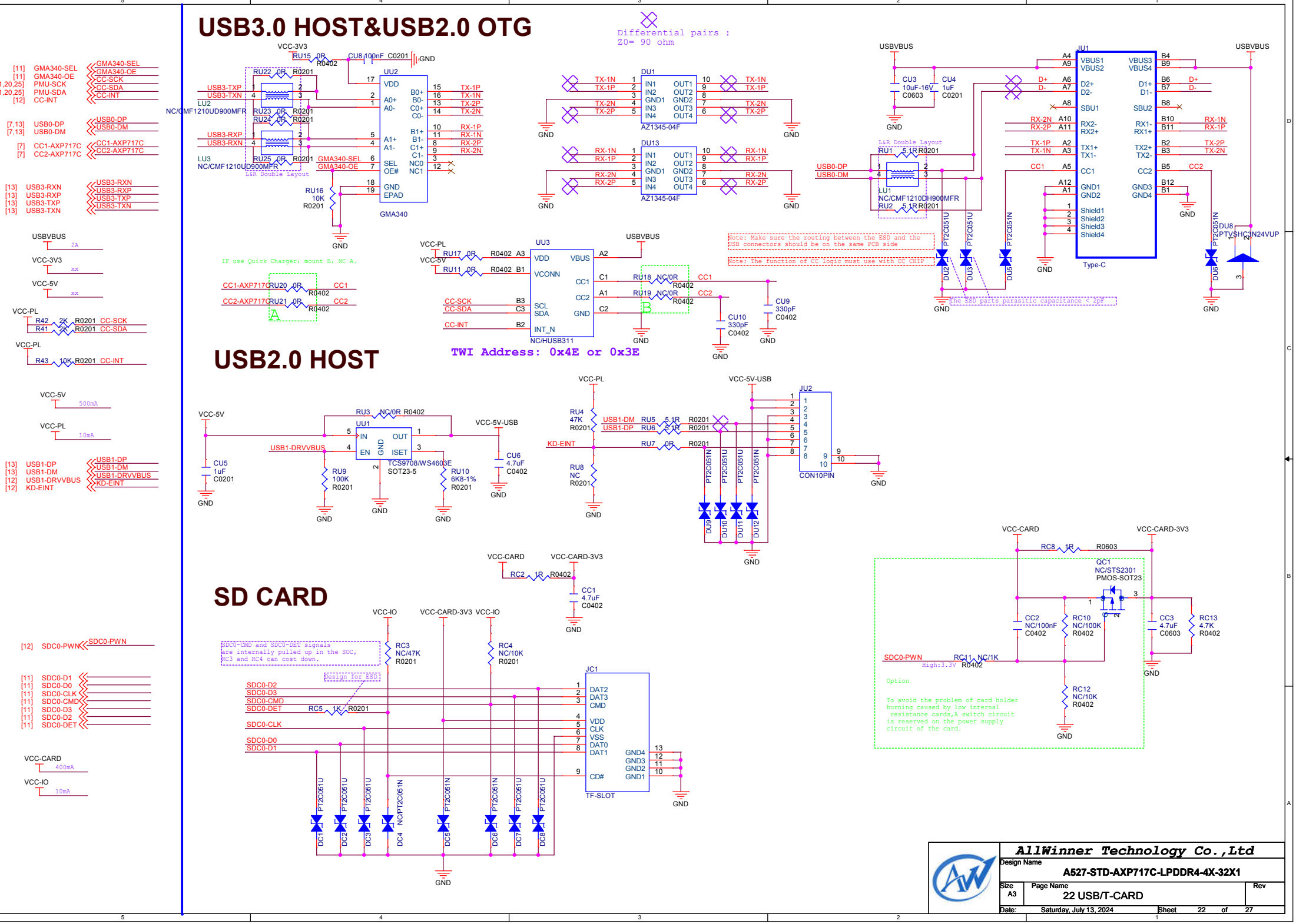

AllWinner Technology Co.,Ltd	
Design Name	A527-STD-AXP717C-LPDDR4-4X-32X1
Size A3	Page Name 22 USB/T-CARD
Rev	
Date: Saturday, July 13, 2024	Sheet 22 of 27

USB3.0 HOST&USB2.0 OTG

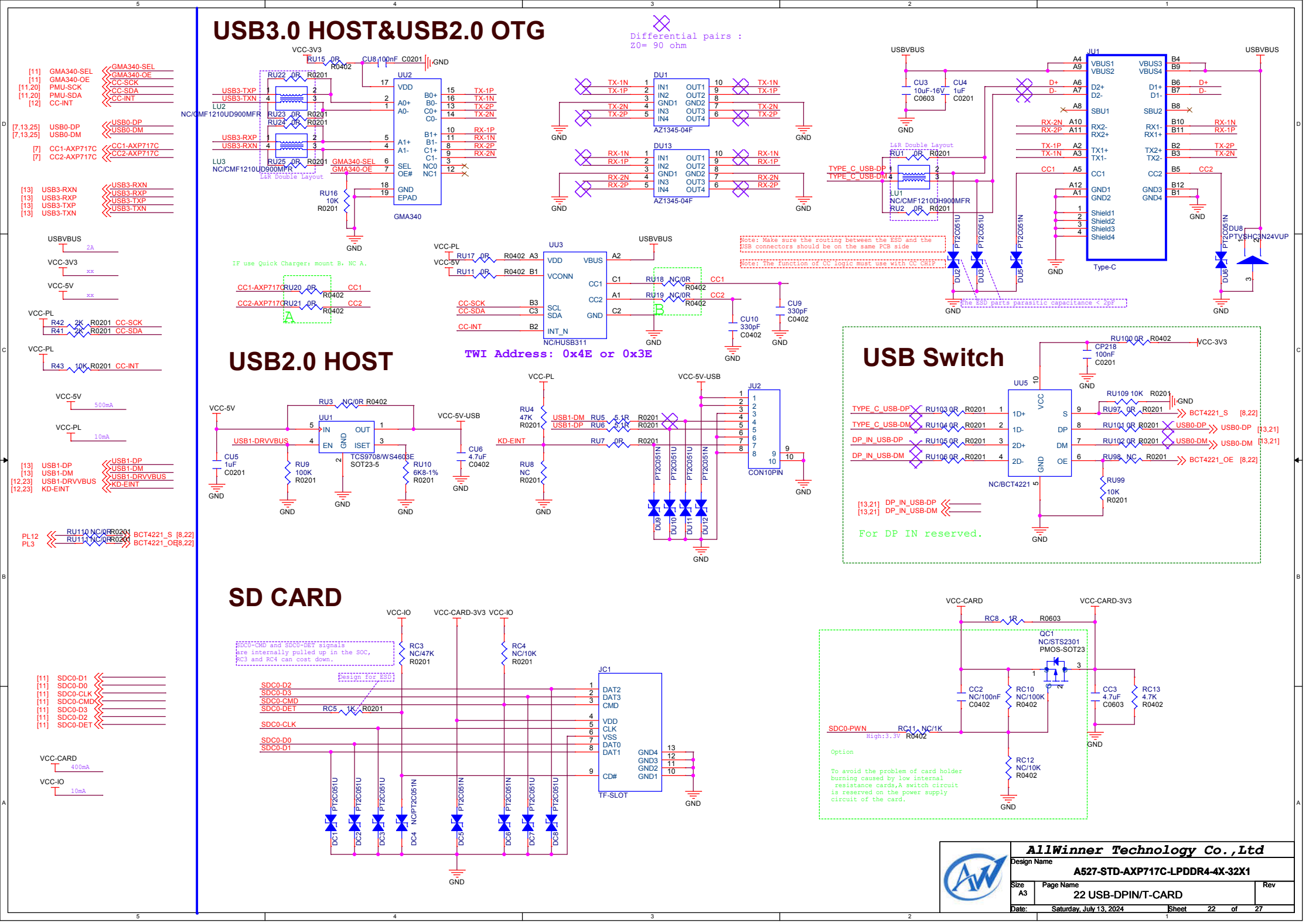

AllWinner Technology Co.,Ltd	
Design Name	A527-STD-AXP717C-LPDDR4-4X-32X1
Size A3	Page Name 22 USB-DPIN/T-CARD
Rev	
Date: Saturday, July 13, 2024	Sheet 22 of 27

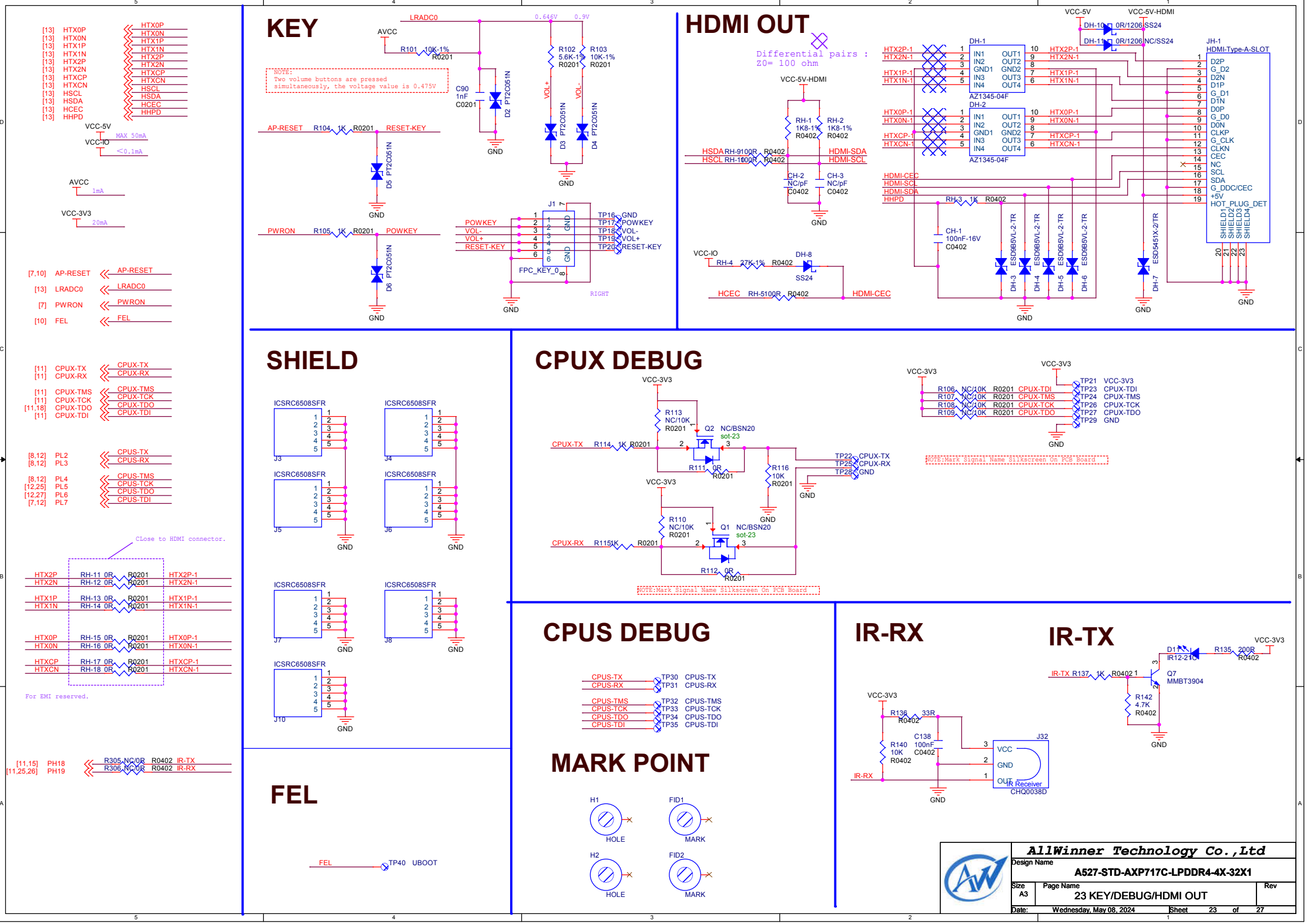
KEY
HDMI OUT
SHIELD
CPUX DEBUG
CPUS DEBUG
MARK POINT
FEL
IR-RX
IR-TX
Differential pairs : Z0= 100 ohm
NOTE: Two volume buttons are pressed simultaneously, the voltage value is 0.475V
NOTE:Mark Signal Name Silkscreen On PCB Board
CLose to HDMI connector.
For EMI reserved.
AllWinner Technology Co.,Ltd
Design Name
A527-STD-AXP717C-LPDDR4-4X-32X1
Size A3
Page Name
23 KEY/DEBUG/HDMI OUT
Rev
Date: Wednesday, May 08, 2024
Sheet 23 of 27

RGMII1

TP52 RGMII1-RXCK
CLK-FANOUT0

ETHERNET

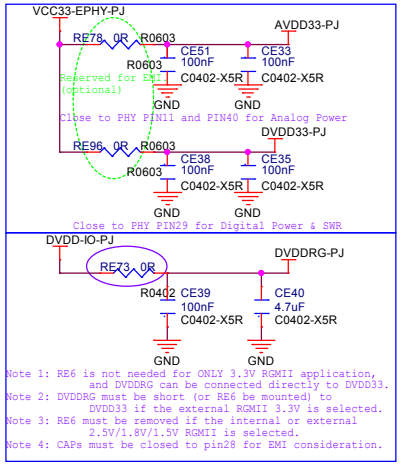

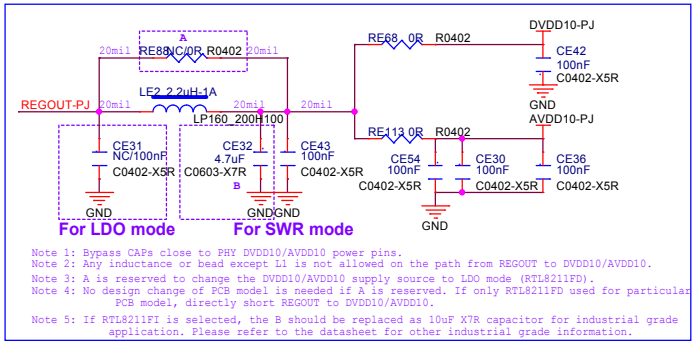

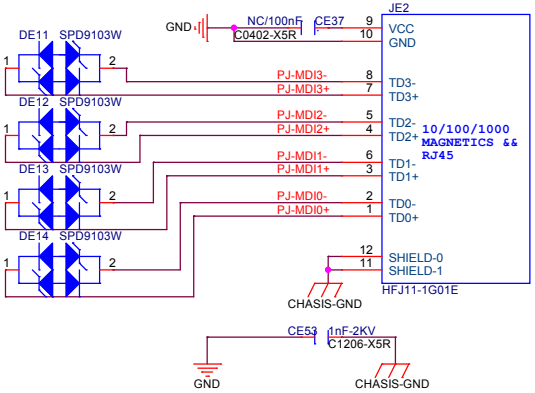

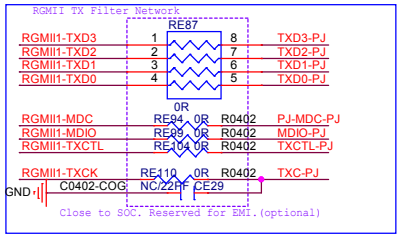

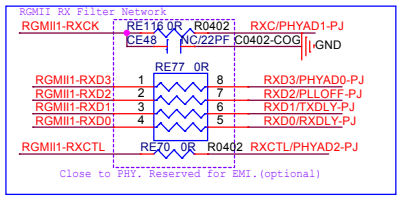

RGMII1-CLKIN-125M RE64 0R R0402 CLKOUT-125M-PJ
CE50 NC/22PF C0402-COG GND

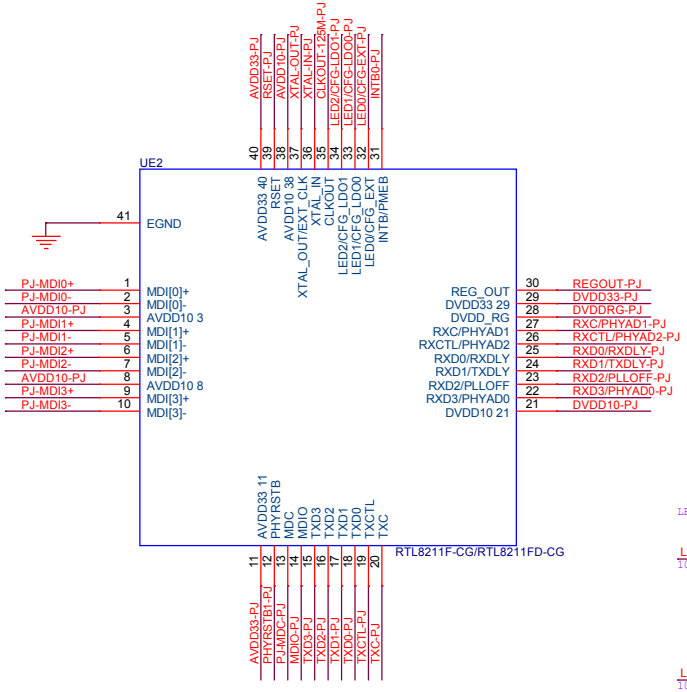

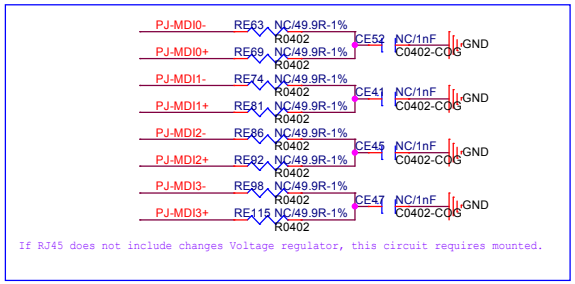

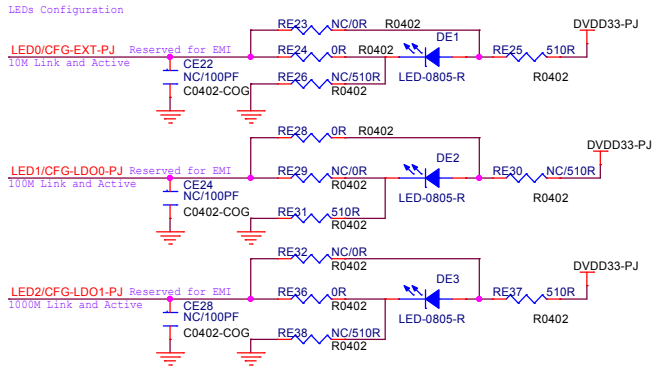

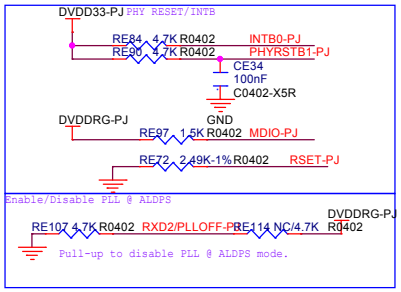

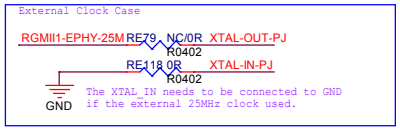

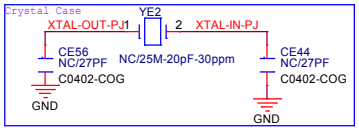

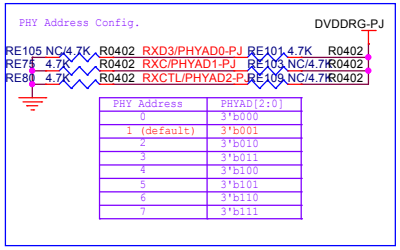

PHY Address	PHYAD[2:0]
0	3'b000
1 (default)	3'b001
2	3'b010
3	3'b011
4	3'b100
5	3'b101
6	3'b110
7	3'b111

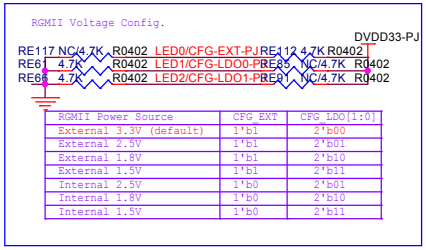

RGMII Power Source	CFG_EXT	CFG_LDO[1:0]
External 3.3V (default)	1'b1	2'b00
External 2.5V	1'b1	2'b01
External 1.8V	1'b1	2'b10
External 1.5V	1'b1	2'b11
Internal 2.5V	1'b0	2'b01
Internal 1.8V	1'b0	2'b10
Internal 1.5V	1'b0	2'b11

LED Resistances Setting	
CFG-EXT=1'b1	RE23(NC), RE24, RE25, RE26(NC)
CFG-EXT=1'b0	RE23, RE24(NC), RE25(NC), RE26
CFG-LDO0=1'b1	RE28(NC), RE29, RE30, R31(NC)
CFG-LDO0=1'b0	RE28, RE29(NC), RE30(NC), RE31
CFG-LDO1=1'b1	RE32(NC), RE36, RE37, RE38(NC)
CFG-LDO1=1'b0	RE32, RE36(NC), RE37(NC), RE38

AllWinner Technology Co.,Ltd			
Design Name	A527-STD-AXP717C-LPDDR4-4X-32X1		
Size A3	Page Name 24 ETHERNET		Rev
Date: Wednesday, May 08, 2024	Sheet 24 of 27		

RGMII

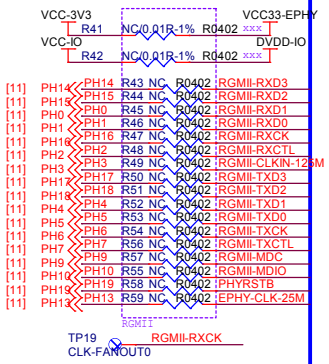

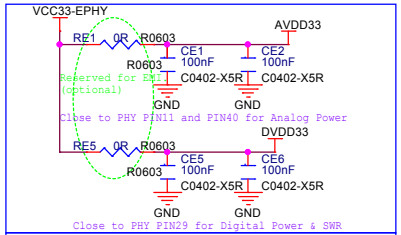

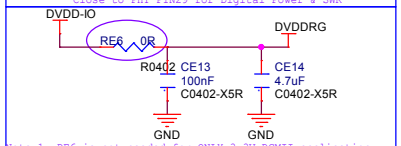

Note 1: RE6 is not needed for ONLY 3.3V RGMII application, and DVDDRG can be connected directly to DVDD33.
Note 2: DVDDRG must be short (or RE6 be mounted) to DVDD33 if the external RGMII 3.3V is selected.
Note 3: RE6 must be removed if the internal or external 2.5V/1.8V/1.5V RGMII is selected.
Note 4: CAPs must be closed to pin28 for EMI consideration.

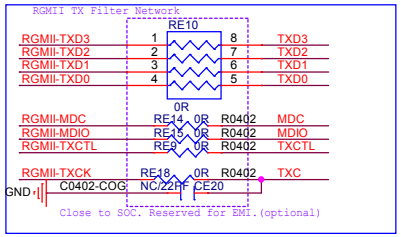

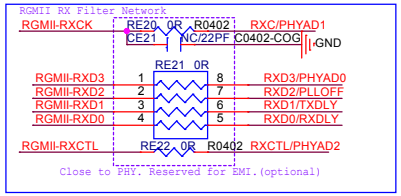

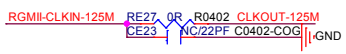

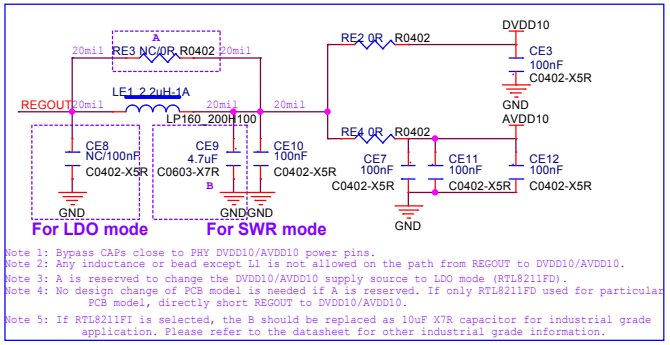

Note 1: Bypass CAPs close to PHY DVDD10/AVDD10 power pins.
Note 2: Any inductance or bead except L1 is not allowed on the path from REGOUT to DVDD10/AVDD10.
Note 3: A is reserved to change the DVDD10/AVDD10 supply source to LDO mode (RTL8211FD).
Note 4: No design change of PCB model is needed if A is reserved. If only RTL8211FD used for particular PCB model, directly short REGOUT to DVDD10/AVDD10.
Note 5: If RTL8211FI is selected, the B should be replaced as 10uF X7R capacitor for industrial grade application. Please refer to the datasheet for other industrial grade information.

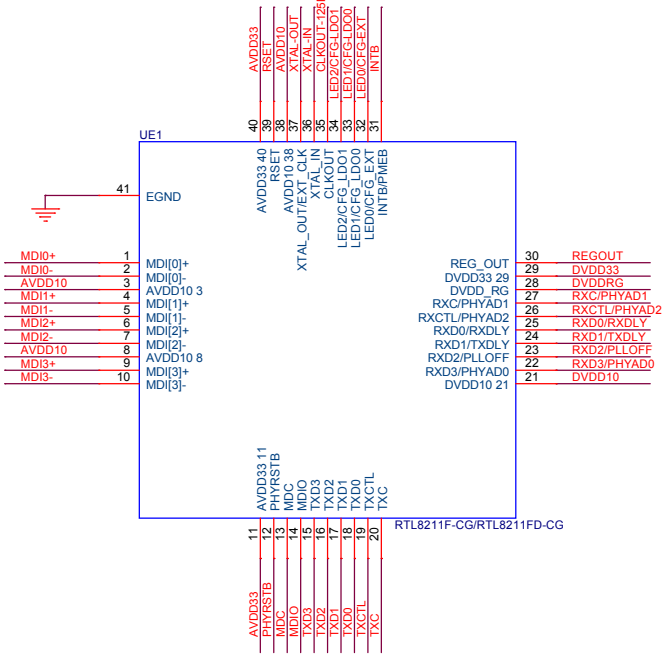

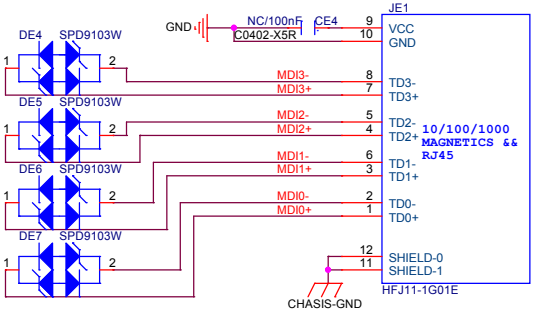

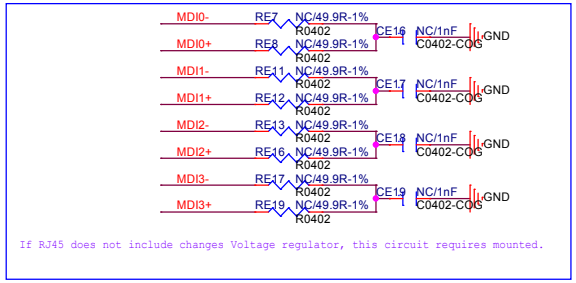

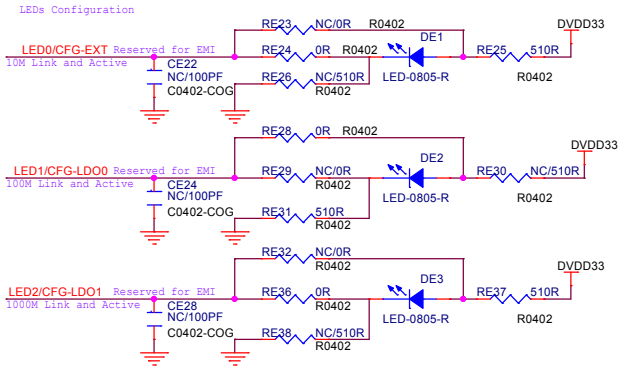

LED Resistances Setting	
CFG-EXT=1'b1	RE23(NC), RE24, RE25, RE26(NC)
CFG-EXT=1'b0	RE23, RE24(NC), RE25(NC), RE26
CFG-LDO0=1'b1	RE28(NC), RE29, RE30, R31(NC)
CFG-LDO0=1'b0	RE28, RE29(NC), RE30(NC), RE31
CFG-LDO1=1'b1	RE32(NC), RE36, RE37, RE38(NC)
CFG-LDO1=1'b0	RE32, RE36(NC), RE37(NC), RE38

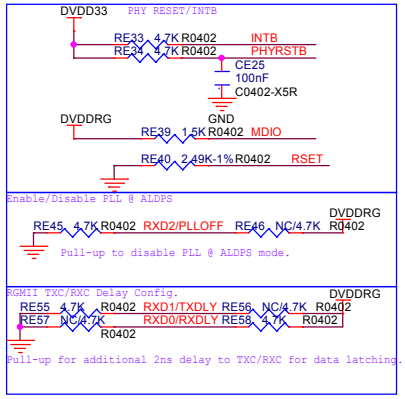

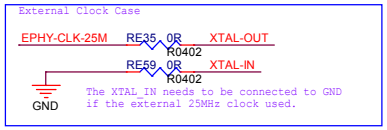

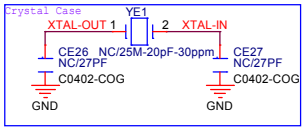

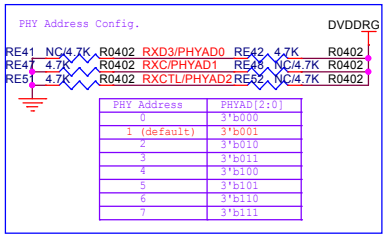

PHY Address	PHYAD[2:0]
0	3'b000
1 (default)	3'b001
2	3'b010
3	3'b011
4	3'b100
5	3'b101
6	3'b110
7	3'b111

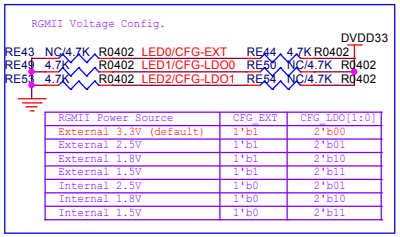

RGMII Power Source	CFG_EXT	CFG_LDO[1:0]
External 3.3V (default)	1'b1	2'b00
External 2.5V	1'b1	2'b01
External 1.8V	1'b1	2'b10
External 1.5V	1'b1	2'b11
Internal 2.5V	1'b0	2'b01
Internal 1.8V	1'b0	2'b10
Internal 1.5V	1'b0	2'b11

AllWinner Technology Co.,Ltd

Design Name: A523-STD-AXP717C-AXP323-LPDDR4-4X

Size: A3 | Page Name: 24 ETHERNET-PH | Rev

Date: Wednesday, May 08, 2024 | Sheet 24 of 27

TYPEC DP IN

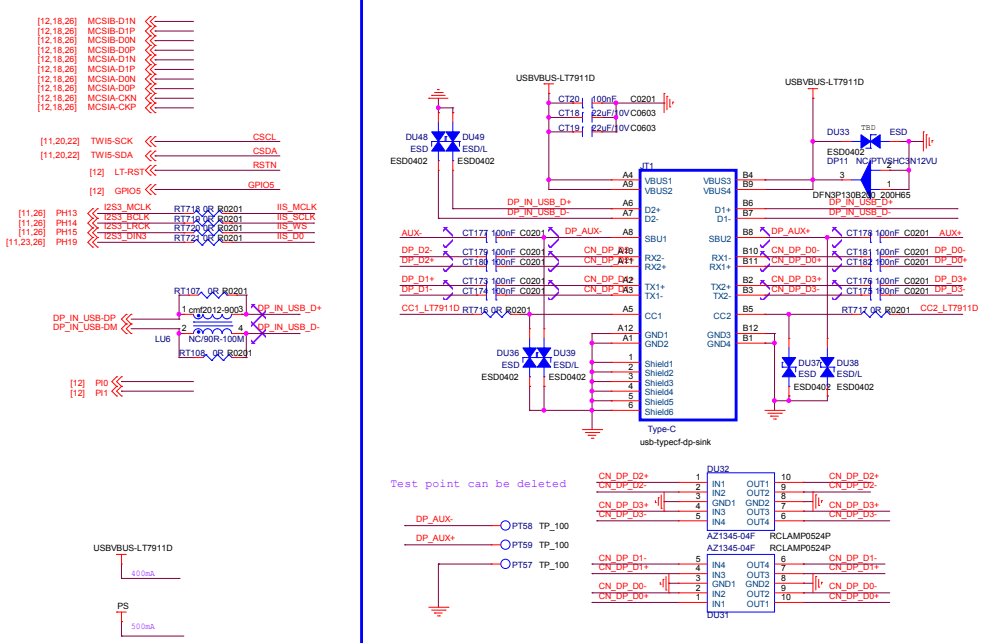

MIPI OUT

If the MIPI output signal is connected to the soc,the GPIO5 and I2C interfaces need to be connected to the soc.GPIO5 can output high level signal within 200ms.Within 200ms,soc can read the registers of the chip via I2C interface,soc can get the resolution and other infomations.

You can control 2d/3d switch via I2C(pin21&22) or GPIO.

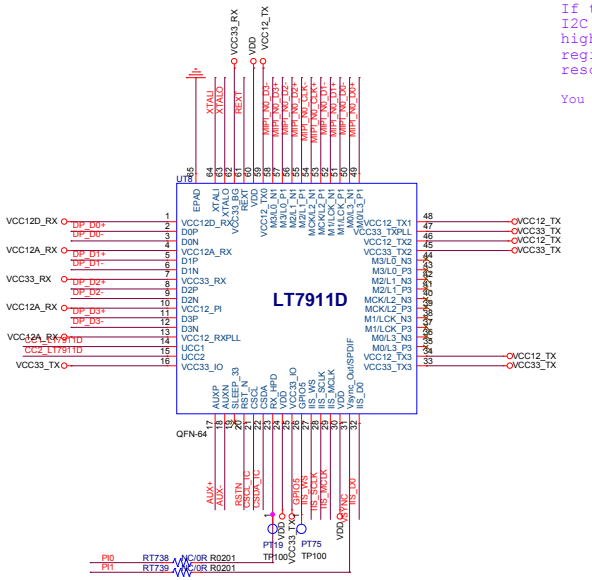

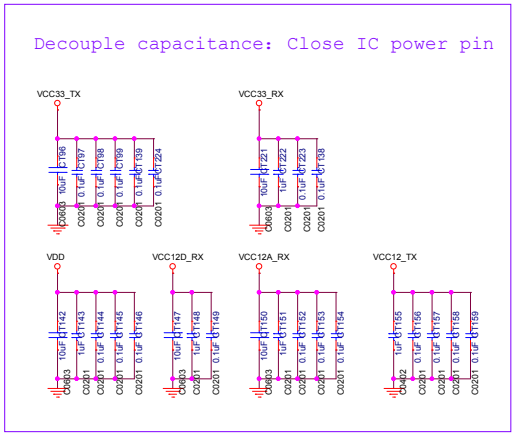

EXTERNAL

Please leave a test point for VSYNC.
If the PCB space is limited,
you can also leave it floating.

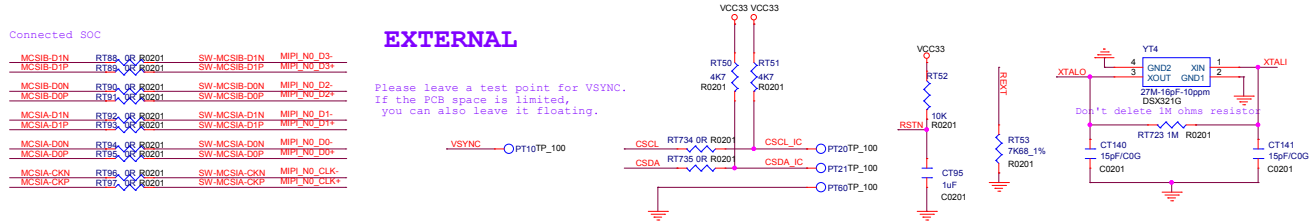

POWER

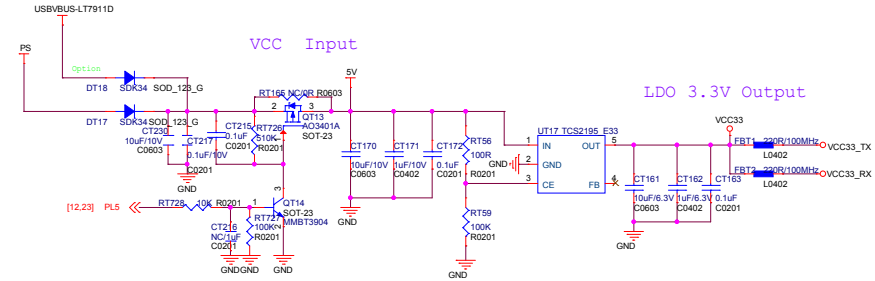

Note:
(1) 1.2V power should be set up at least 1ms later than 3.3V power, the internal reset signal should be released after 1.2V power is ready.
(2) External RESET# signal should be set up at least 1ms later than 1.2V.
The 1.2V power supply enable pin can be connected to the 3.3V power supply.

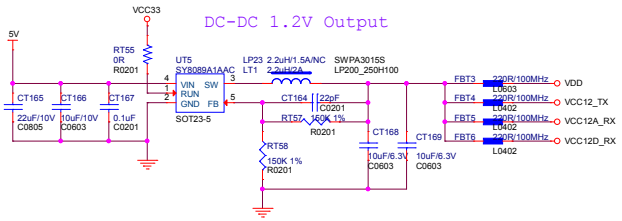

AllWinner Technology Co.,Ltd		
Design Name: A527-STD-AXP717C-LPDDR4-4X-32X1		
Size: A2	Page Name: 25 TypeC DP IN	Rev
Date: Wednesday, May 08, 2024	Sheet 25 of 27	

HDMI IN

MIPI CSI

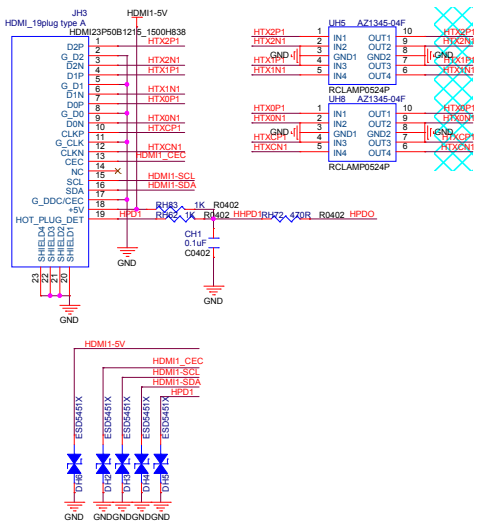

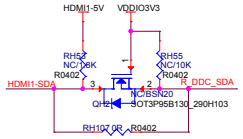

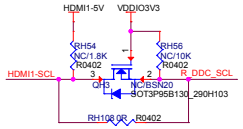

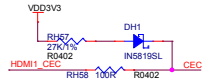

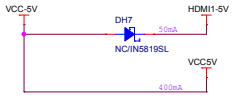

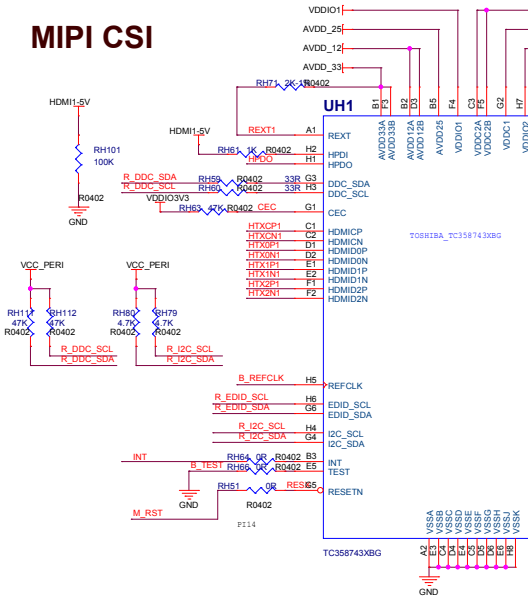

Differential pairs
Z0= 100 ohm

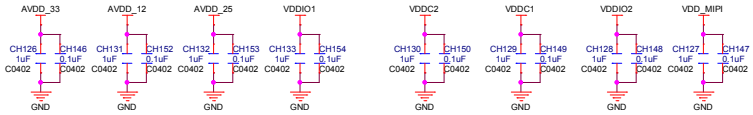

MAIN 2.5V POWER

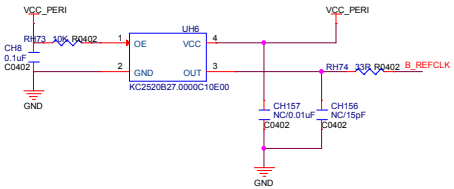

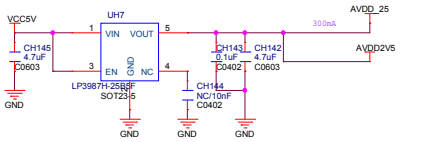

MAIN 1.2V POWER

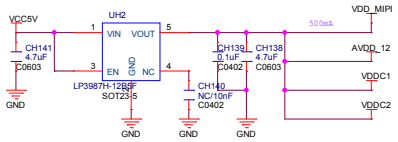

Vout= 3.3V

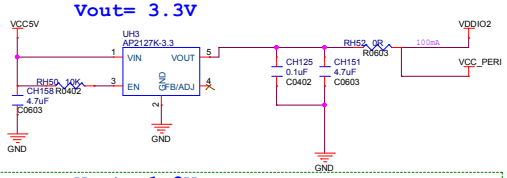

Vout= 1.8V

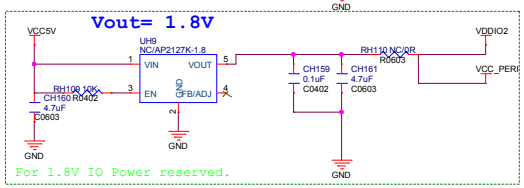

For 1.8V IO Power reserved.

3.3V Iout_min=200mA,max=600mA

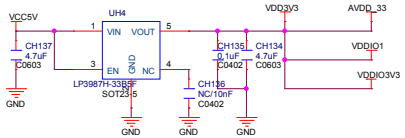

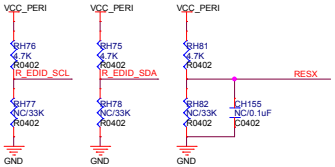

AllWinner Technology Co.,Ltd	
Design Name	A527-STD-AXP717C-LPDDR4-4X-32X1
Size A2 / Page Name	26 HDMI IN / Rev
Date: Wednesday, May 08, 2024	Sheet 26 of 27

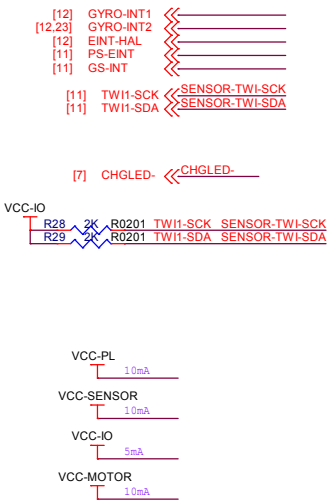

Gyroscope

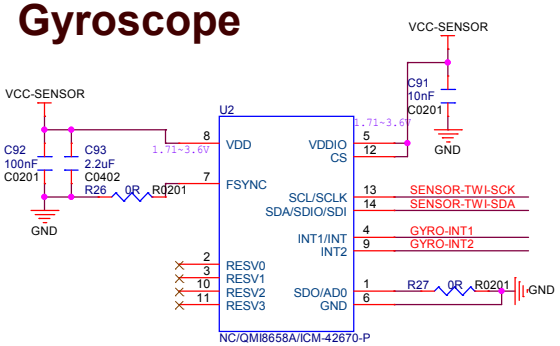

QMI8658A TWI Address: 0x6B
ICM-42670-P TWI Address: 0x68

Hall switch

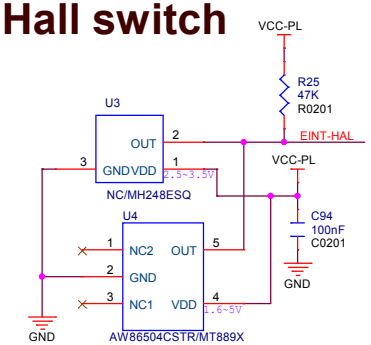

Magnetometer

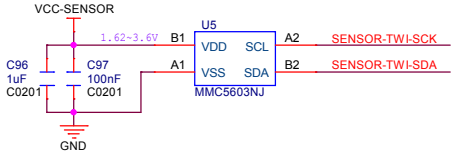

MMC5603NJ:1.62~3.6V TWI Address=0x30
AK09918C:1.65~1.95V TWI Address=0x0C

Note:AK09918C need use 1.8V POWER&I2C

ALS Sensor

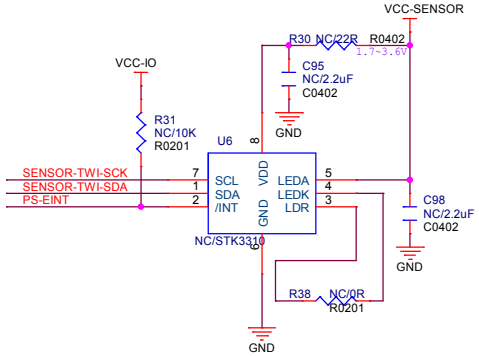

STK3310 TWI Address: 0x48

3axis G-sensor

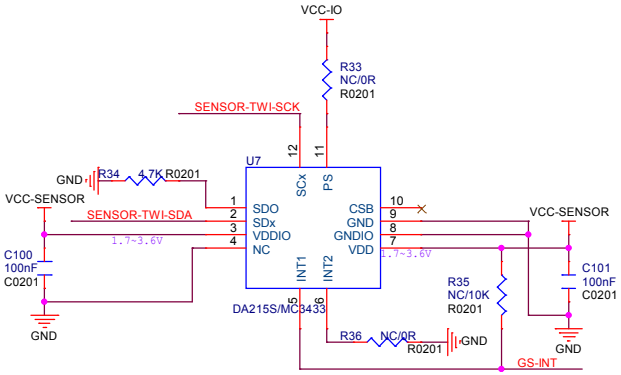

DA215S TWI Address: 0x4E
MC3433 TWI Address: 0x19

Motor

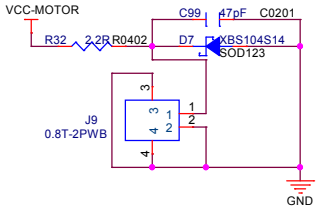

AllWinner Technology Co.,Ltd			
Design Name	A527-STD-AXP717C-LPDDR4-4X-32X1		
Size A3	Page Name 28 Sensor		Rev
Date: Wednesday, May 08, 2024	Sheet 27 of 27		