VERSION HISTORY

Index:

01 VERSION HISTORY
02 Block
03 BTB Connector
04 Dual Lvds
05 MIPI DSI
06 RGB888

Revision	Description	Date
Ver 1.0	Release Version	2023-05-05

BLOCK

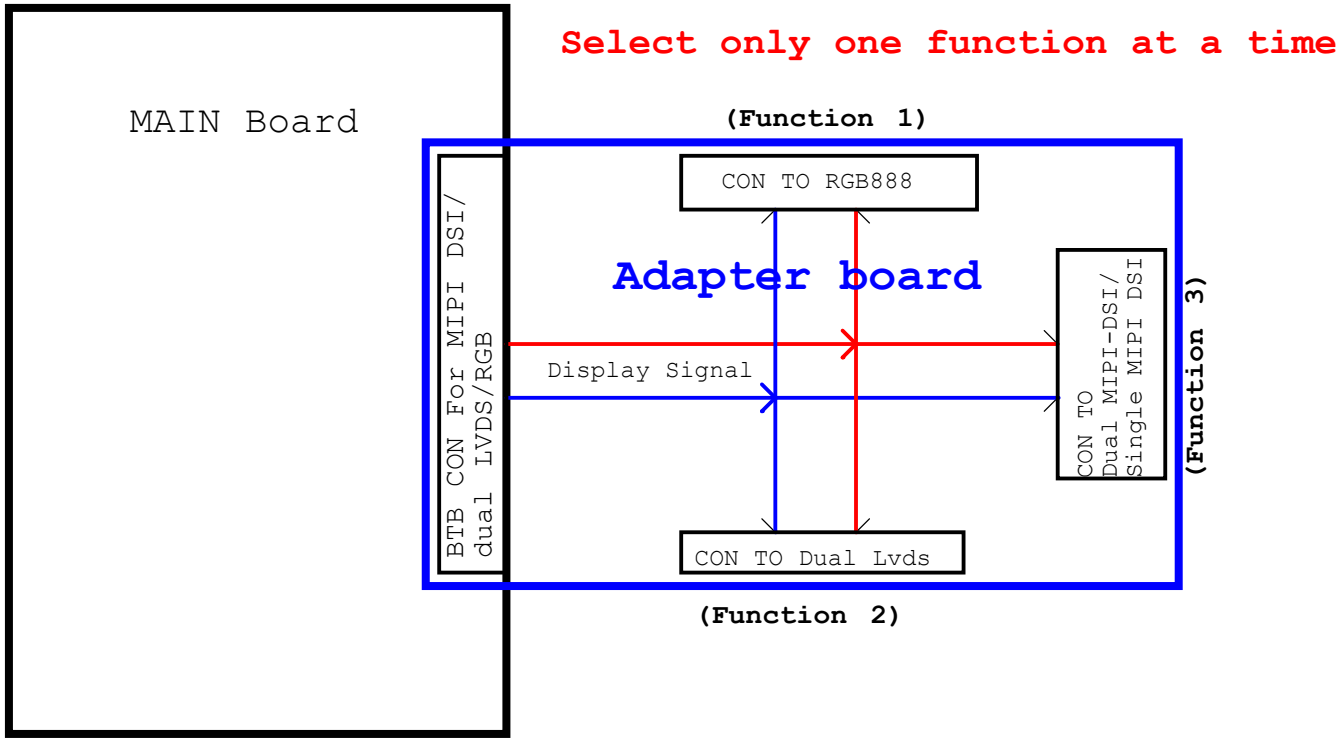

AllWinner Technology Co.,Ltd		
Design Name: SUB_Display_Board		
Size: A3	Page Name: 02 BLOCK	Rev: V1_0
Date: Monday, December 18, 2023	Sheet 2 of 6	

RGB : Connect to T527-DEMO-AXP717B-LPDDR4-32X1 Board JL4

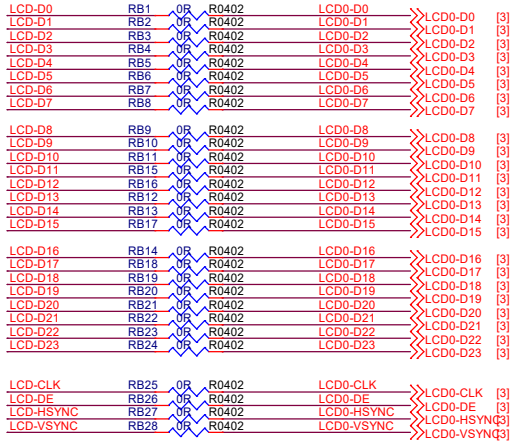

Dual LVDS : Connect to T527-DEMO-AXP717B-LPDDR4-32X1 Board JL4 or JL1

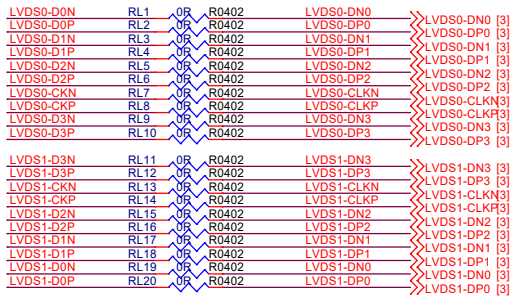

Dual MIPI : Connect to T527-DEMO-AXP717B-LPDDR4-32X1 Board JL1

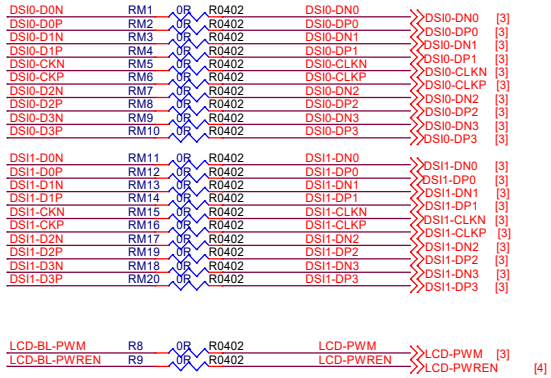

Connect to T527-DEMO-AXP717B-LPDDR4-32X1 Board JL1 or JL4

BTB CON For Dual LVDS/ Dual MIPI/ Single MIPI / RGB LCD

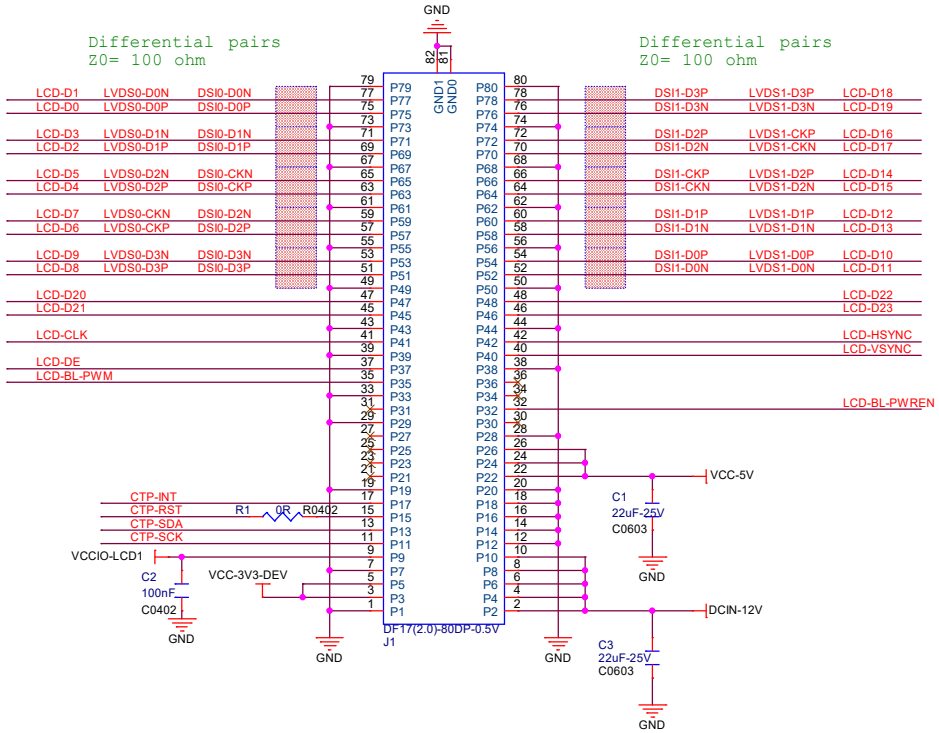

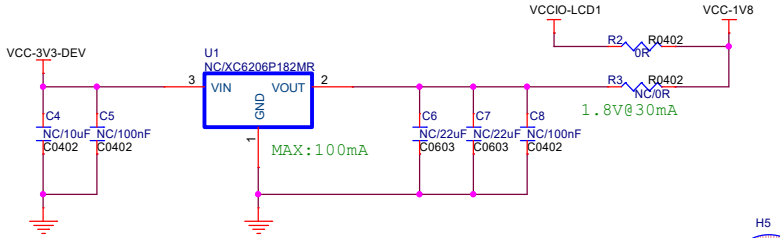

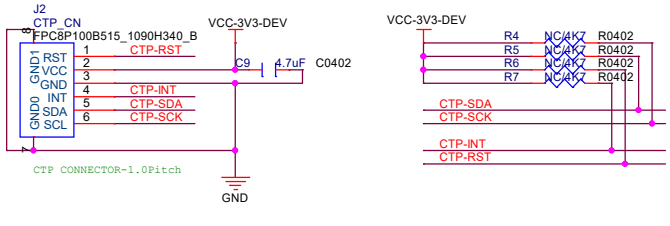

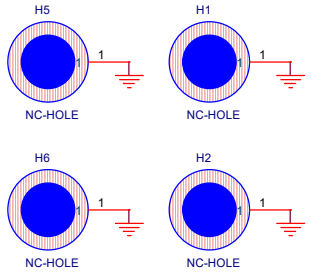

AllWinner Technology Co.,Ltd		
Design Name: SUB_Display_Board		
Size: A3	Page Name: 03 BTB Connector	Rev
Date: Monday, December 18, 2023	Sheet 3 of 6	

Dual Lvds

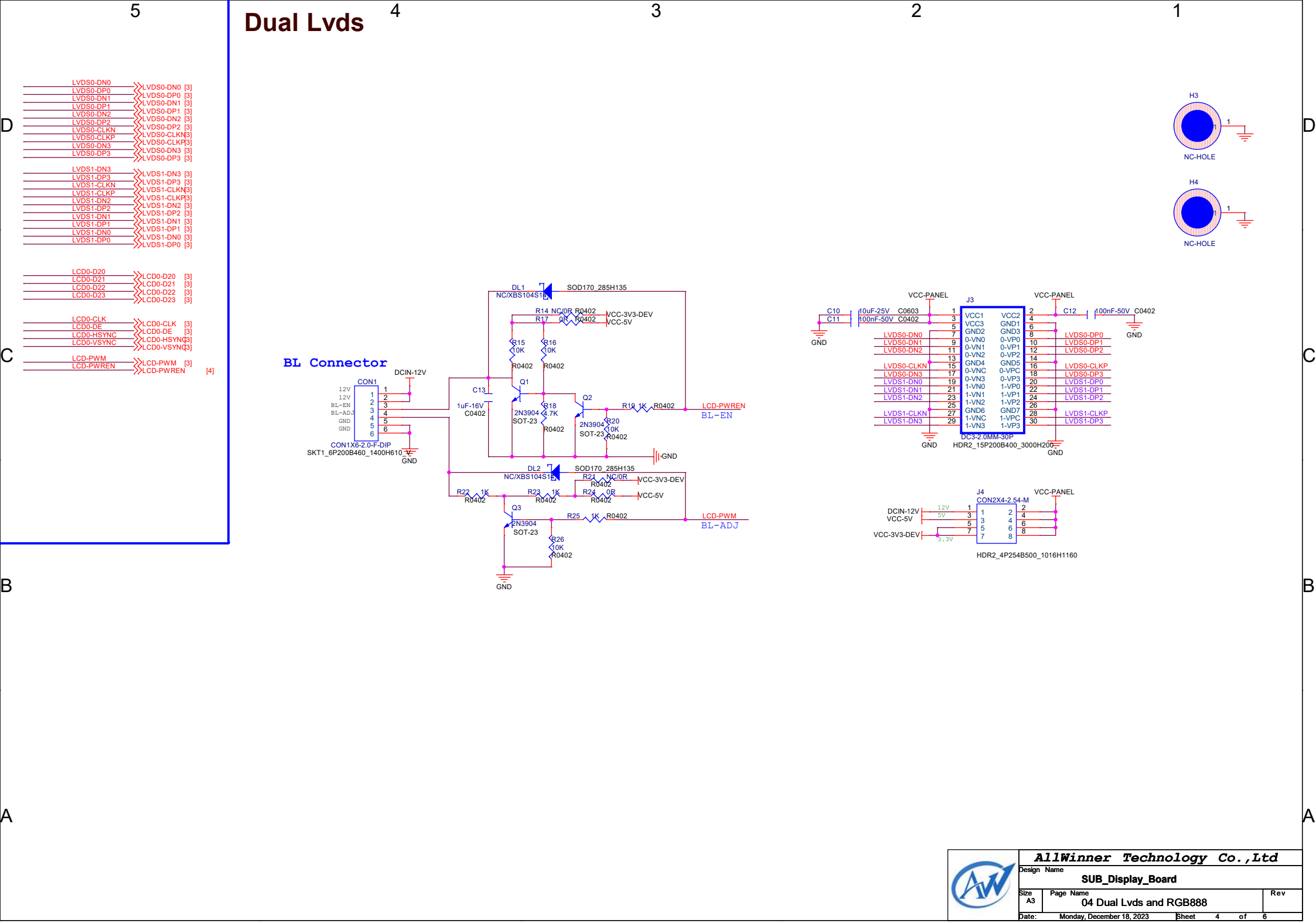

AllWinner Technology Co.,Ltd		
Design Name	SUB_Display_Board	
Size A3	Page Name 04 Dual Lvds and RGB888	Rev
Date: Monday, December 18, 2023	Sheet 4 of 6	

MIPI-DSI

Keep DN and DP Differential pairs connected:Z0= 100 ohm

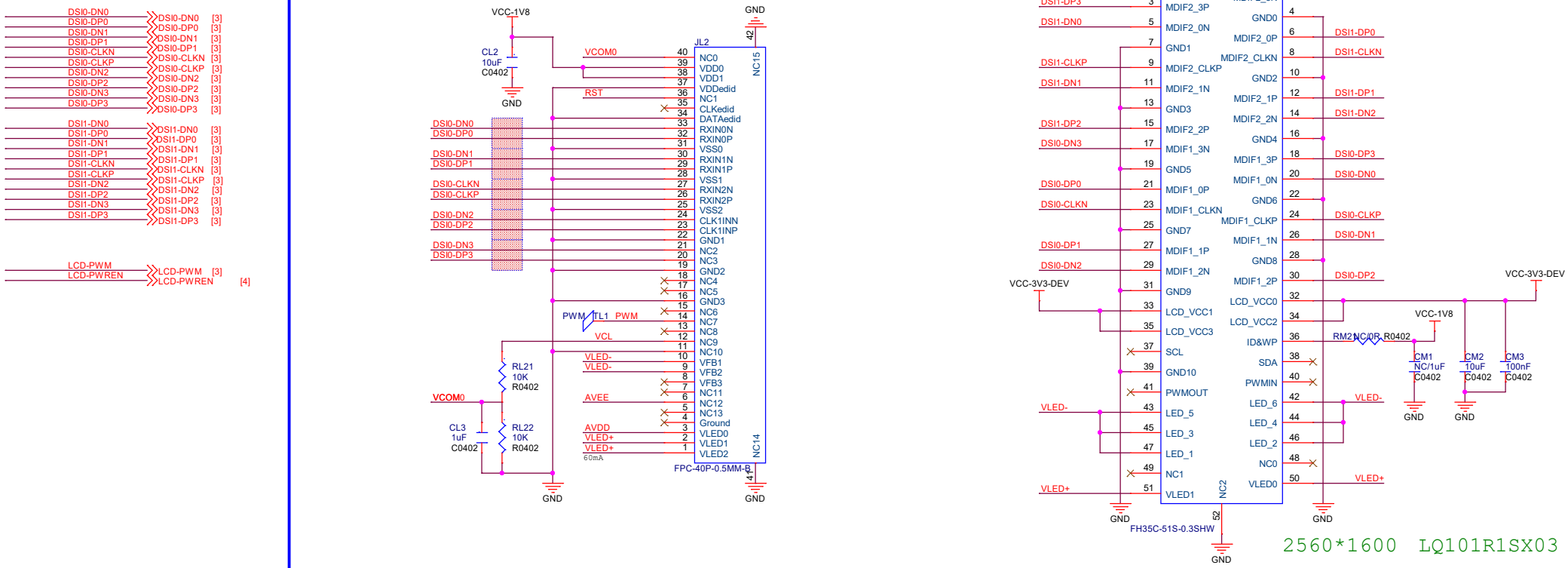

Power

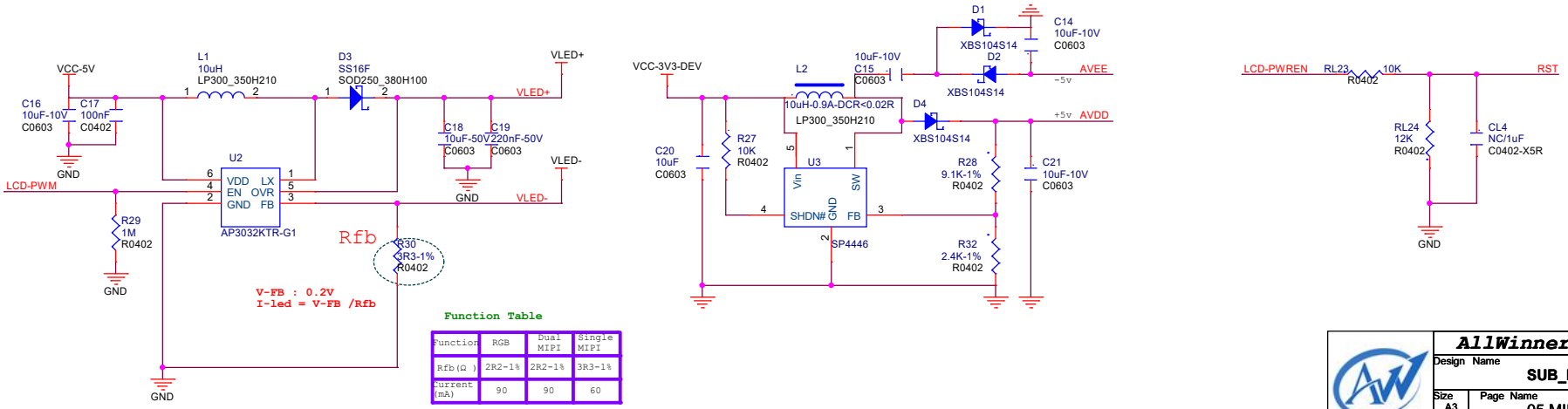

Function Table

Function	RGB	Dual MIPI	Single MIPI
Rfb(Ω)	2R2-1%	2R2-1%	3R3-1%
Current (mA)	90	90	60

AllWinner Technology Co.,Ltd	
Design Name	SUB_Display_Board
Size A3	Page Name 05 MIPI DSI
Rev	
Date: Monday, December 18, 2023	Sheet 5 of 6

RGB888

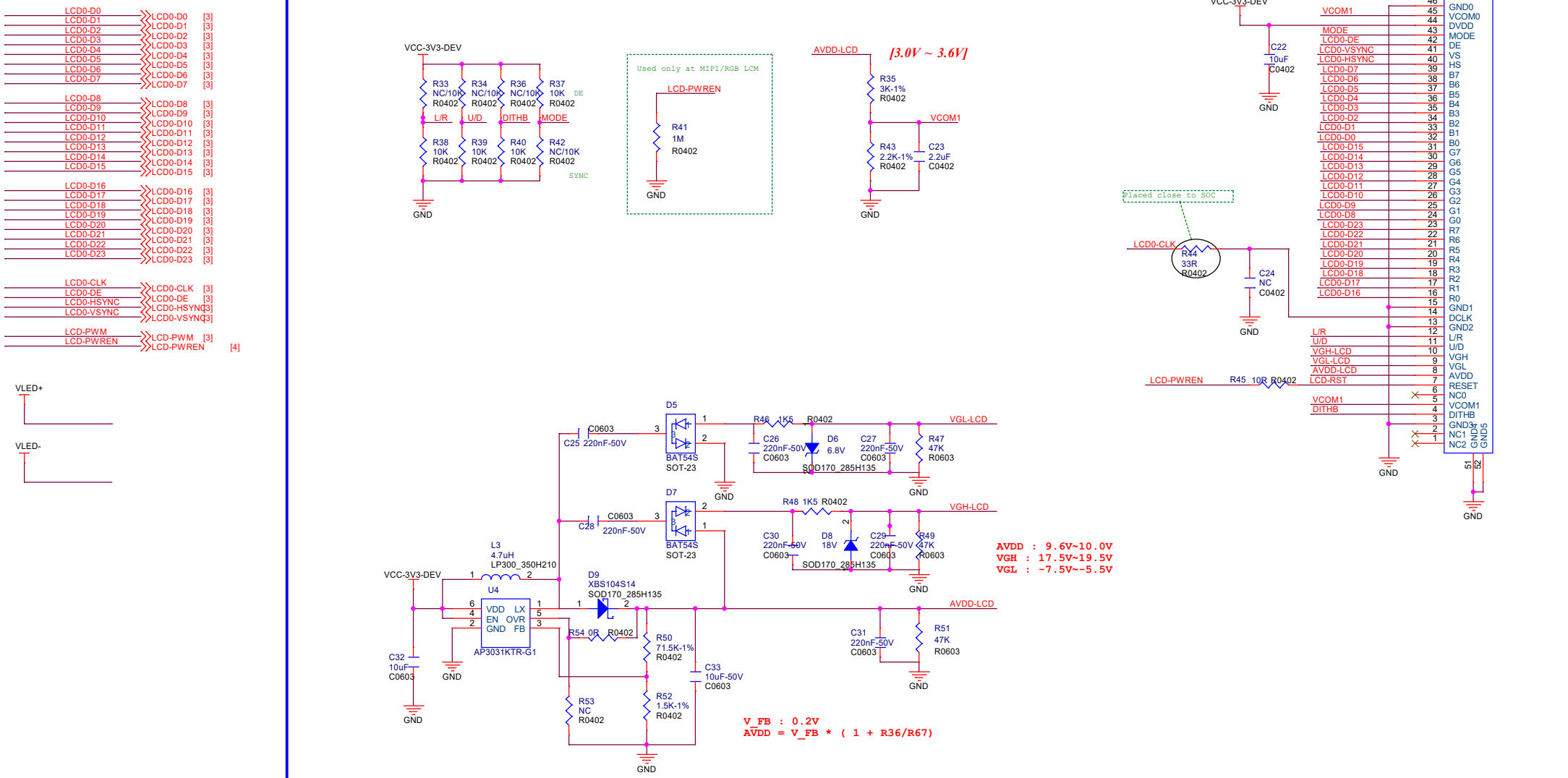

AllWinner Technology Co.,Ltd	
Design Name	SUB_Display_Board
Size A3	Page Name 06 RGB888
Rev	
Date: Monday, December 18, 2023	Sheet 6 of 6