VERSION HISTORY

Index:

01 VERSION HISTORY
02 BLOCK DIAGRAM
03 POWER TREE
04 CONNECT
05 NVP6158C

Revision	Description	Date
Ver1.0	Release Version	2023-03-24

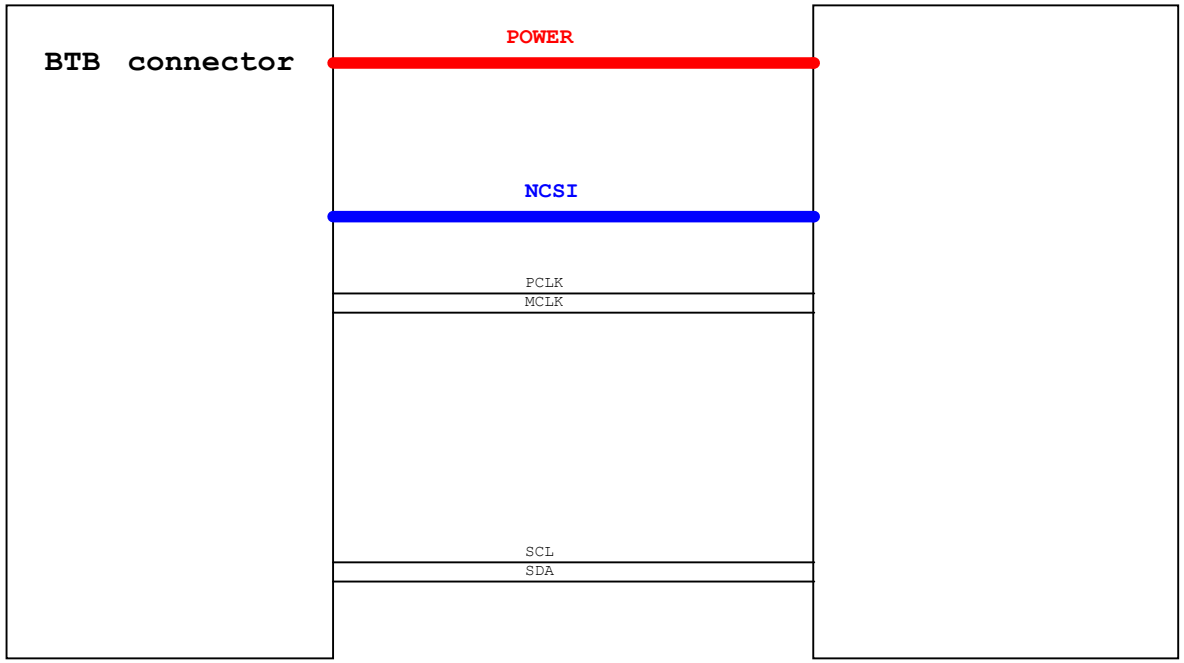

AllWinner Technology Co.,Ltd			
Design Name SUB_NVP6158C_DVP_V1_0			
Size A4	Page Name BLOCK DIAGRAM		Rev 1.0
Date: Monday, December 18, 2023	Sheet 2 of 5		

POWER TREE

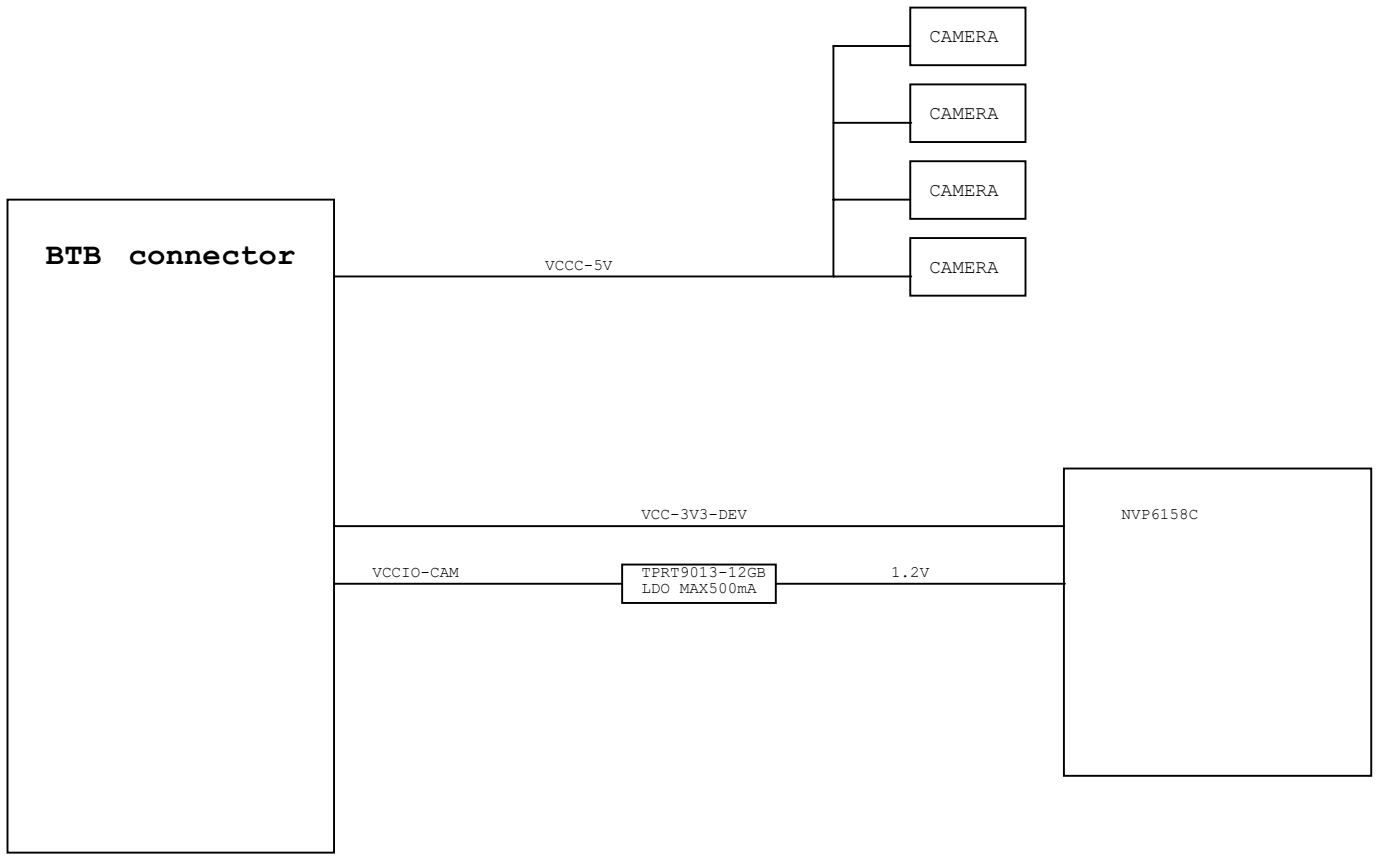

AllWinner Technology Co.,Ltd			
Design Name SUB_NVP6158C_DVP_V1_0			
Size A4	Page Name POWER TREE		Rev 1.0
Date: Monday, December 18, 2023	Sheet 3 of 5		

NCSI

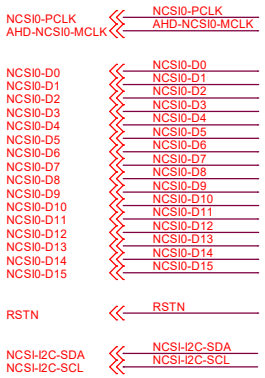

BTB Connector

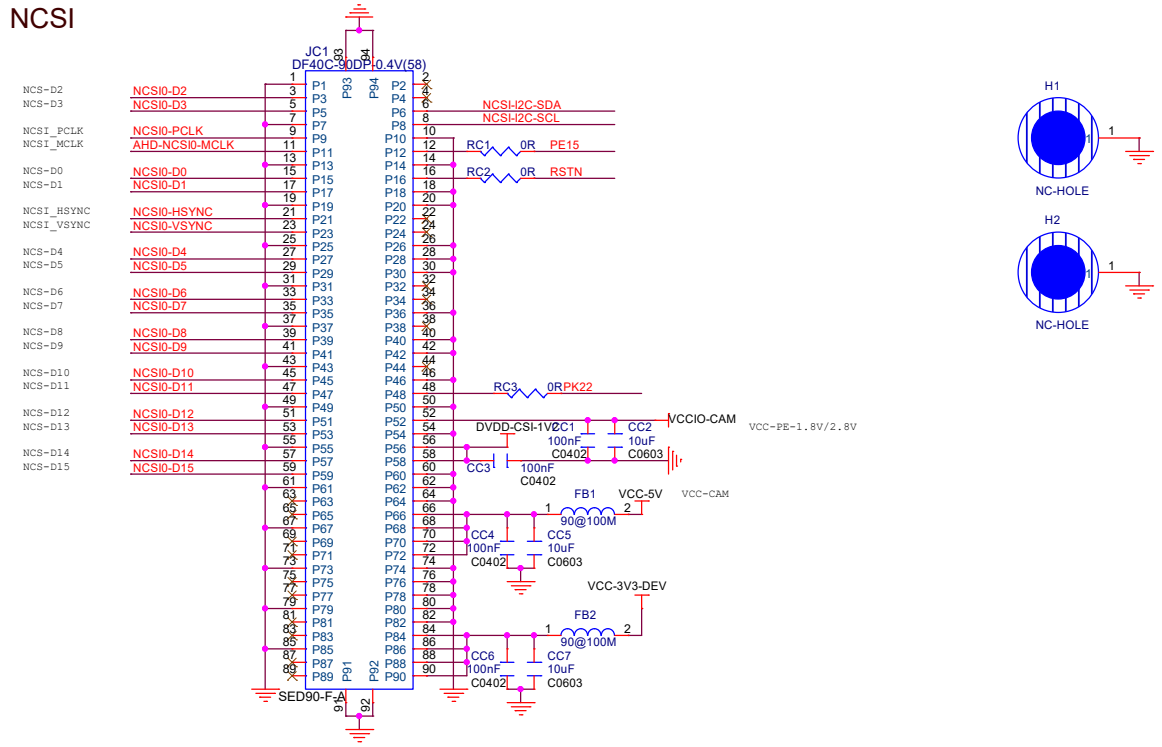

Power

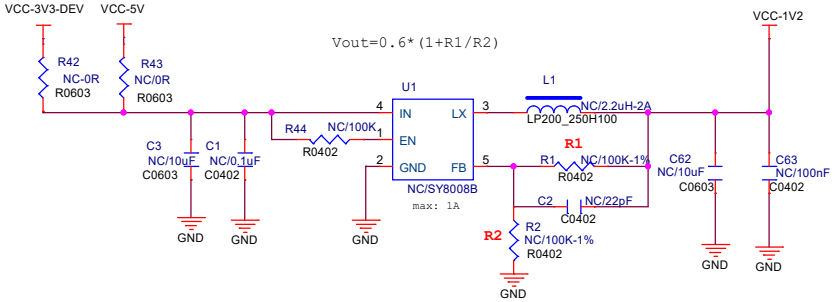

AllWinner Technology Co.,Ltd		
Design Name: SUB_NVP6158C_DVP_V1_0		
Size: A3	Page Name: CSI	Rev: 1.0
Date: Monday, December 18, 2023	Sheet 4 of 5	

NVP6158C

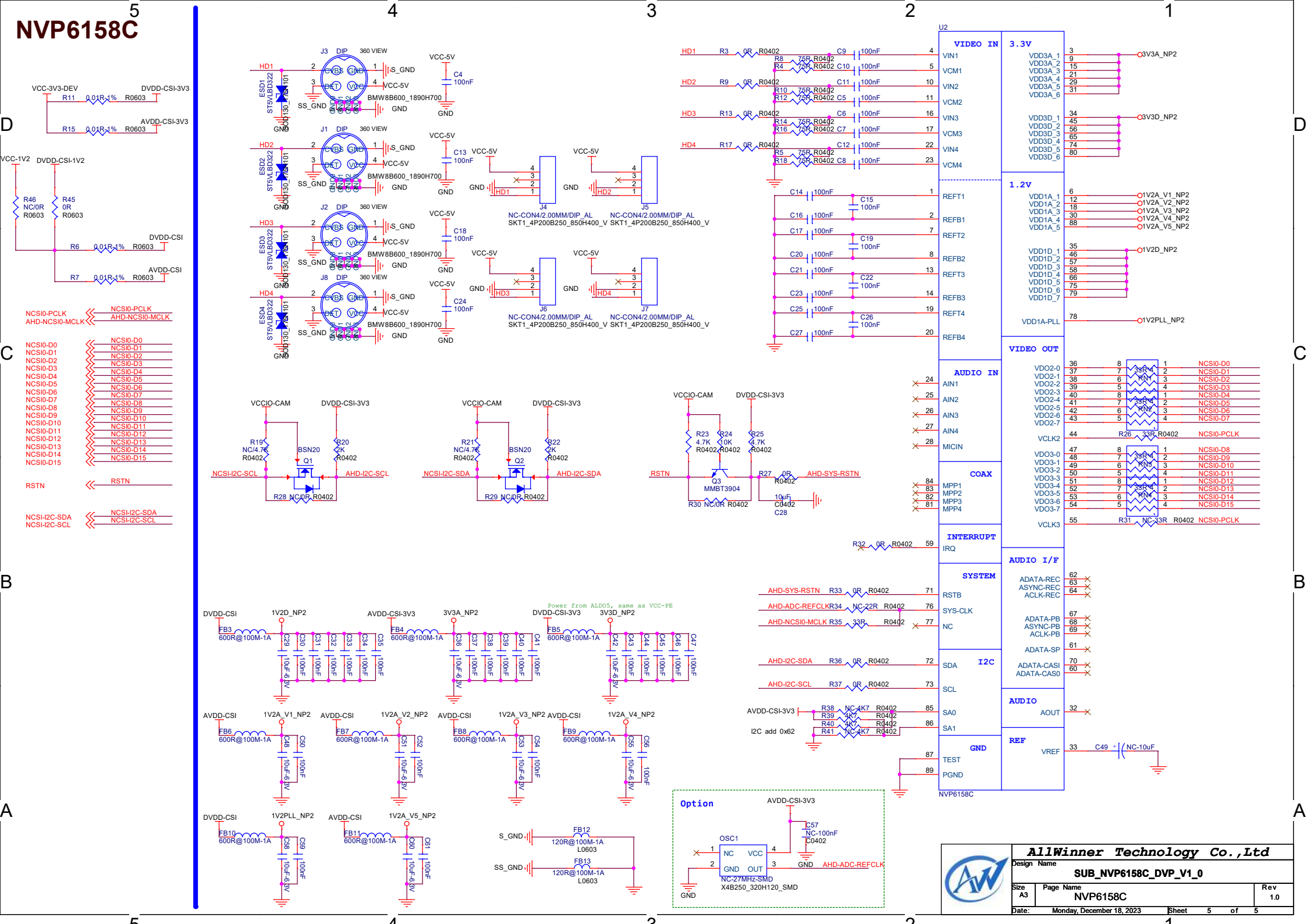
VCC-3V3-DEV
DVDD-CSI-3V3
R11 0.01R-1% R0603
R15 0.01R-1% R0603
AVDD-CSI-3V3
VCC-1V2
DVDD-CSI-1V2
R46 NC/0R R0603
R45 0R R0603
R6 0.01R-1% R0603
DVDD-CSI
R7 0.01R-1% R0603
AVDD-CSI
NCSI0-PCLK
AHD-NCSI0-MCLK
NCSI0-D0
NCSI0-D1
NCSI0-D2
NCSI0-D3
NCSI0-D4
NCSI0-D5
NCSI0-D6
NCSI0-D7
NCSI0-D8
NCSI0-D9
NCSI0-D10
NCSI0-D11
NCSI0-D12
NCSI0-D13
NCSI0-D14
NCSI0-D15
RSTN
NCSI-I2C-SDA
NCSI-I2C-SCL
J3 DIP 360 VIEW
J1 DIP 360 VIEW
J2 DIP 360 VIEW
J8 DIP 360 VIEW
ESD1 ST5VLBD322
ESD2 ST5VLBD322
ESD3 ST5VLBD322
ESD4 ST5VLBD322
BMW8B600_1890H700
S_GND
SS_GND
GND
VCC-5V
C4 100nF
C13 100nF
C18 100nF
C24 100nF
J4 J5 J6 J7
NC-CON4/2.00MM/DIP_AL
SKT1_4P200B250_850H400_V
U2
VIDEO IN
VIN1
VCM1
VIN2
VCM2
VIN3
VCM3
VIN4
VCM4
REFT1
REFB1
REFT2
REFB2
REFT3
REFB3
REFT4
REFB4
AUDIO IN
AIN1
AIN2
AIN3
AIN4
MICIN
COAX
MPP1
MPP2
MPP3
MPP4
INTERRUPT
IRQ
SYSTEM
RSTB
SYS-CLK
NC
I2C
SDA
SCL
SA0
SA1
GND
TEST
PGND
NVP6158C
3.3V
VDD3A_1
VDD3A_2
VDD3A_3
VDD3A_4
VDD3A_5
VDD3A_6
VDD3D_1
VDD3D_2
VDD3D_3
VDD3D_4
VDD3D_5
VDD3D_6
3V3A_NP2
3V3D_NP2
1.2V
VDD1A_1
VDD1A_2
VDD1A_3
VDD1A_4
VDD1A_5
VDD1D_1
VDD1D_2
VDD1D_3
VDD1D_4
VDD1D_5
VDD1D_6
VDD1D_7
VDD1A-PLL
1V2A_V1_NP2
1V2A_V2_NP2
1V2A_V3_NP2
1V2A_V4_NP2
1V2A_V5_NP2
1V2D_NP2
1V2PLL_NP2
VIDEO OUT
VDO2-0
VDO2-1
VDO2-2
VDO2-3
VDO2-4
VDO2-5
VDO2-6
VDO2-7
VCLK2
VDO3-0
VDO3-1
VDO3-2
VDO3-3
VDO3-4
VDO3-5
VDO3-6
VDO3-7
VCLK3
AUDIO I/F
ADATA-REC
ASYNC-REC
ACLK-REC
ADATA-PB
ASYNC-PB
ACLK-PB
ADATA-SP
ADATA-CASI
ADATA-CAS0
AUDIO
AOUT
REF
VREF
C49 NC-10uF
VCCIO-CAM
DVDD-CSI-3V3
R19 NC/4.7K R0402
R20 2K R0402
BSN20 Q1
NCSI-I2C-SCL
AHD-I2C-SCL
R28 NC/0R R0402
R21 NC/4.7K R0402
R22 2K R0402
BSN20 Q2
NCSI-I2C-SDA
AHD-I2C-SDA
R29 NC/0R R0402
R23 4.7K R0402
R24 10K R0402
R25 4.7K R0402
Q3 MMBT3904
R30 NC/0R R0402
R27 0R R0402
AHD-SYS-RSTN
10uF C0402 C28
R32 0R R0402
AHD-SYS-RSTN R33 0R R0402
AHD-ADC-REFCLK R34 NC-22R R0402
AHD-NCSI0-MCLK R35 33R R0402
AHD-I2C-SDA R36 0R R0402
AHD-I2C-SCL R37 0R R0402
AVDD-CSI-3V3
R38 NC-4K7 R0402
R39 4K7 R0402
R40 4K7 R0402
R41 NC-4K7 R0402
I2C add 0x62
Power from ALDO5, same as VCC-PE
FB3 600R@100M-1A
FB4 600R@100M-1A
FB5 600R@100M-1A
FB6 600R@100M-1A
FB7 600R@100M-1A
FB8 600R@100M-1A
FB9 600R@100M-1A
FB10 600R@100M-1A
FB11 600R@100M-1A
10uF-6.3V
100nF
FB12 120R@100M-1A L0603
FB13 120R@100M-1A L0603
Option
OSC1
NC-27MHz-SMD
X4B250_320H120_SMD
C57 NC-100nF C0402
AHD-ADC-REFCLK
AllWinner Technology Co.,Ltd
Design Name
SUB_NVP6158C_DVP_V1_0
Size A3
Page Name NVP6158C
Rev 1.0
Date: Monday, December 18, 2023
Sheet 5 of 5