VERSION HISTORY

Index:

P01: VERSION HISTORY
P02: Block
P03: Connector
P04: GPHY

Revision	Description	Date	Drawn	Checked	Approved
Ver1.0	Initial version	20230406	DC	SVE	

Title	SUB_RTL8211_RGMII	
Size	Document Number History Version	Rev
Date: Wednesday, April 26, 2023	Sheet 1 of 4	

BLOCK

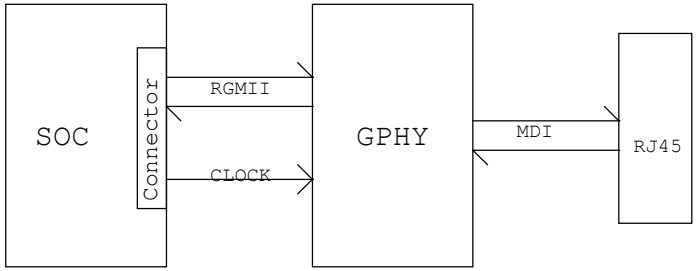

Title	SUB_RTL8211_RGMII	
Size	Document Number: Block	Rev
Date: Wednesday, April 26, 2023	Sheet 2 of 4	

Connector

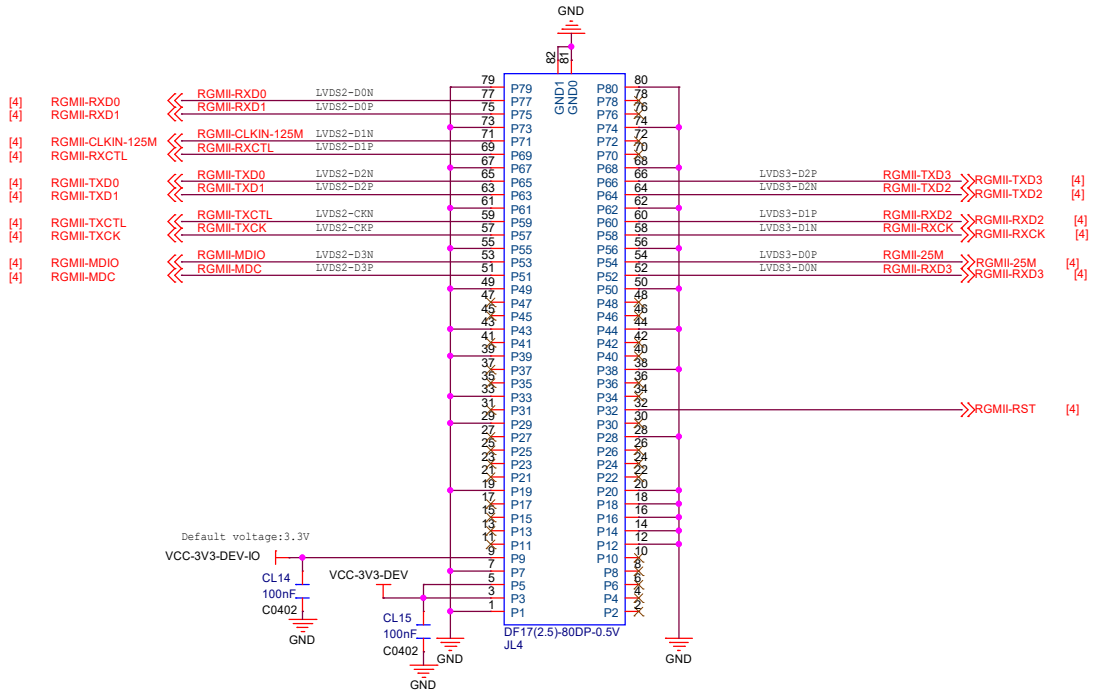

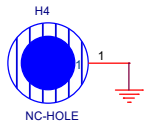

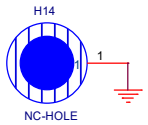

Title	SUB_RTL8211_RGMII	
Size A3	Document Number Connector	Rev
Date: Wednesday, April 26, 2023	Sheet 3 of 4	

RGMII1

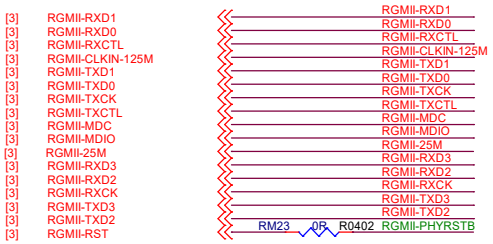

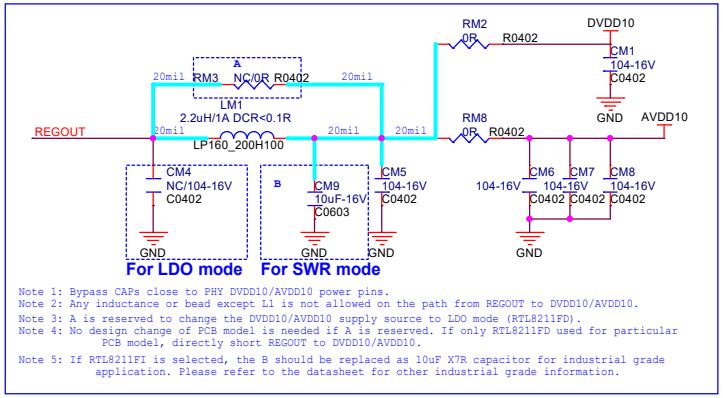

Note 1: Bypass CAPs close to PHY DVDD10/AVDD10 power pins.
Note 2: Any inductance or bead except L1 is not allowed on the path from REGOUT to DVDD10/AVDD10.
Note 3: A is reserved to change the DVDD10/AVDD10 supply source to LDO mode (RTL8211FD).
Note 4: No design change of PCB model is needed if A is reserved. If only RTL8211FD used for particular PCB model, directly short REGOUT to DVDD10/AVDD10.
Note 5: If RTL8211FI is selected, the B should be replaced as 10uF X7R capacitor for industrial grade application. Please refer to the datasheet for other industrial grade information.

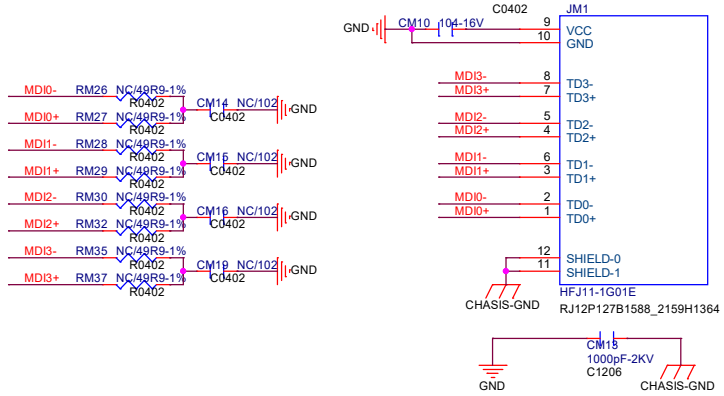

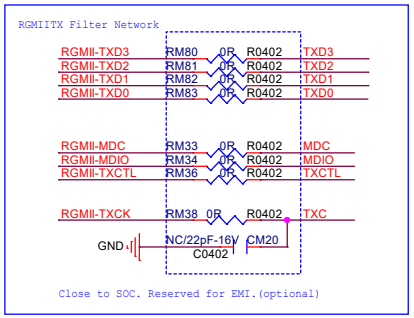

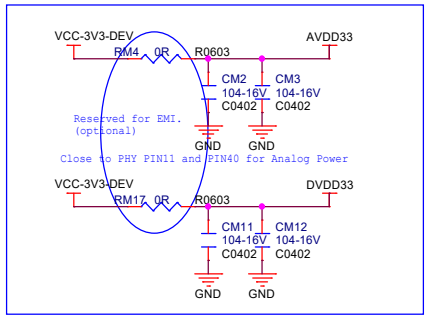

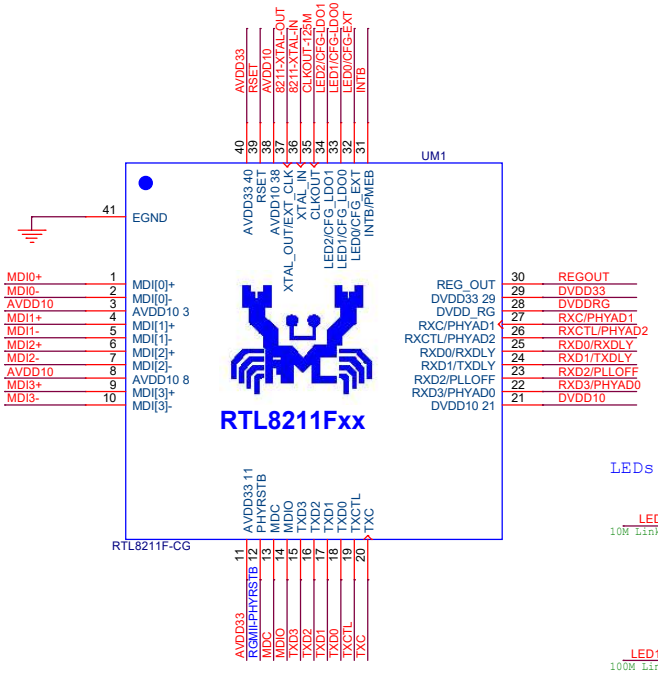

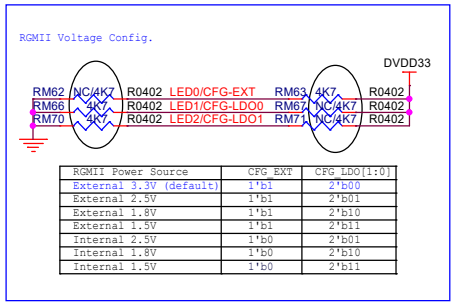

RGMII Power Source	CFG_EXT	CFG_LDO[1:0]
External 3.3V (default)	1'b1	2'b00
External 2.5V	1'b1	2'b01
External 1.8V	1'b1	2'b10
External 1.5V	1'b1	2'b11
Internal 2.5V	1'b0	2'b01
Internal 1.8V	1'b0	2'b10
Internal 1.5V	1'b0	2'b11

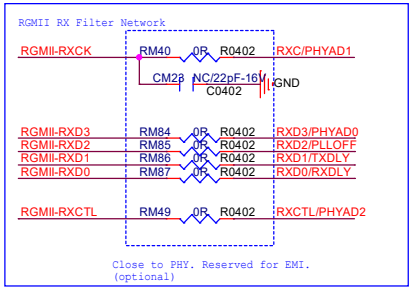

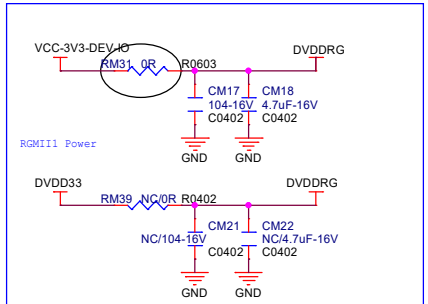

Note 1: RM31 is not needed for ONLY 3.3V RGMII application, and DVDDRG can be connected directly to DVDD33.
Note 2: DVDDRG must be short (or RM31 be mounted) to DVDD33 if the external RGMII 3.3V is selected.
Note 3: RM53 must be removed if the internal or external 2.5V/1.8V/1.5V RGMII is selected.
Note 4: CAPs must be closed to pin28 for EMI consideration.

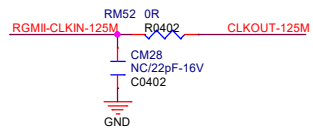

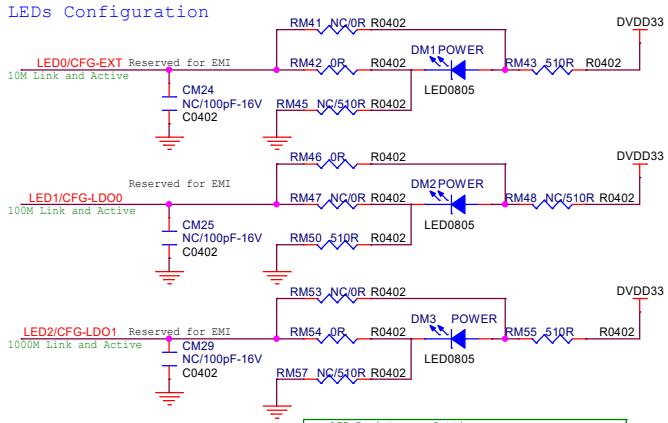

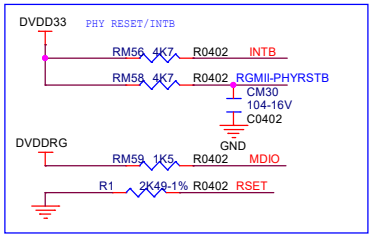

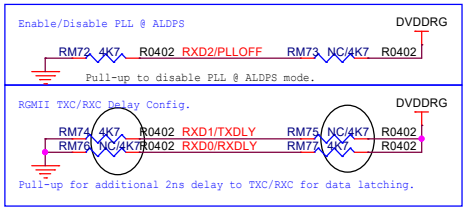

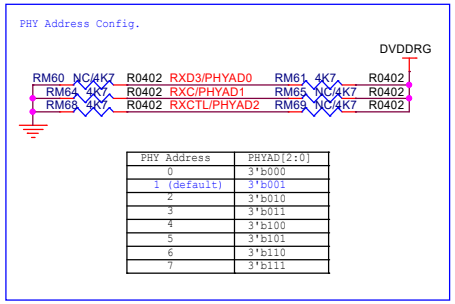

PHY Address	PHYAD[2:0]
0	3'b000
1 (default)	3'b001
2	3'b010
3	3'b011
4	3'b100
5	3'b101
6	3'b110
7	3'b111

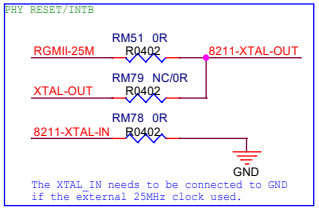

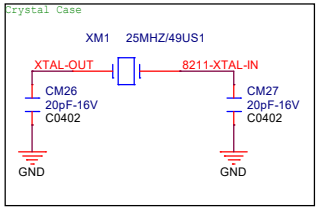

	LED Resistances Setting
CFG-EXT=1'b1	RM62(NC), RM64, RM106, RM108(NC)
CFG-EXT=1'b0	RM62, RM64(NC), RM106(NC), RM108
CFG-LDO0=1'b1	RM100(NC), RM103, RM110, RM101(NC)
CFG-LDO0=1'b0	RM100, RM103(NC), RM110(NC), RM101
CFG-LDO1=1'b1	RM114(NC), RM105, RM109, R102(NC)
CFG-LDO1=1'b0	RM114, RM105(NC), RM109(NC), RM102

Title	SUB_RTL8211_RGMII	
Size	Document Number GPHY	Rev
Date: Wednesday, April 26, 2023	Sheet 4 of 4	