VERSION HISTORY

Index:

01 VERSION HISTORY
02 BLOCK DIAGRAM
03 TP2815

Revision	Description	Date	Drawn	Checked	Approved
Ver 1.0	Release Version	2023-03-24	AWA1826		
	Deleted 2 drilled holes	2023-04-03	AWA1826		
	NC C27, R34;Place R35	2023-04-03	AWA1826		
Ver 1.1	Change 1V2 Power Supply to avoid thermal disspation problem	2023-04-18	AWA1826		

BLOCK

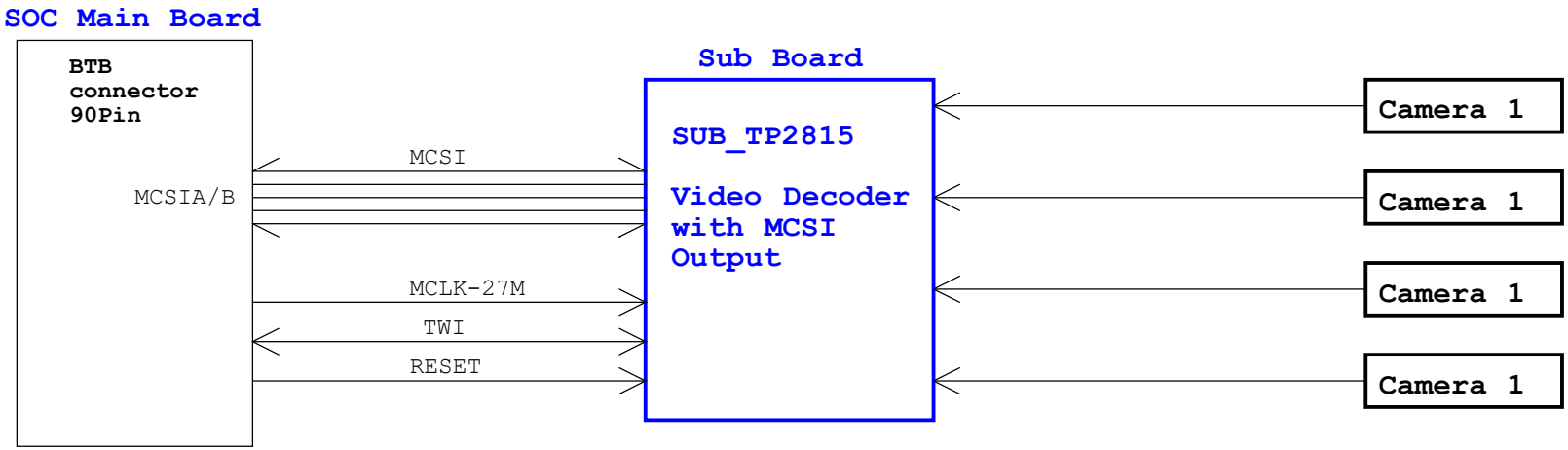

POWER

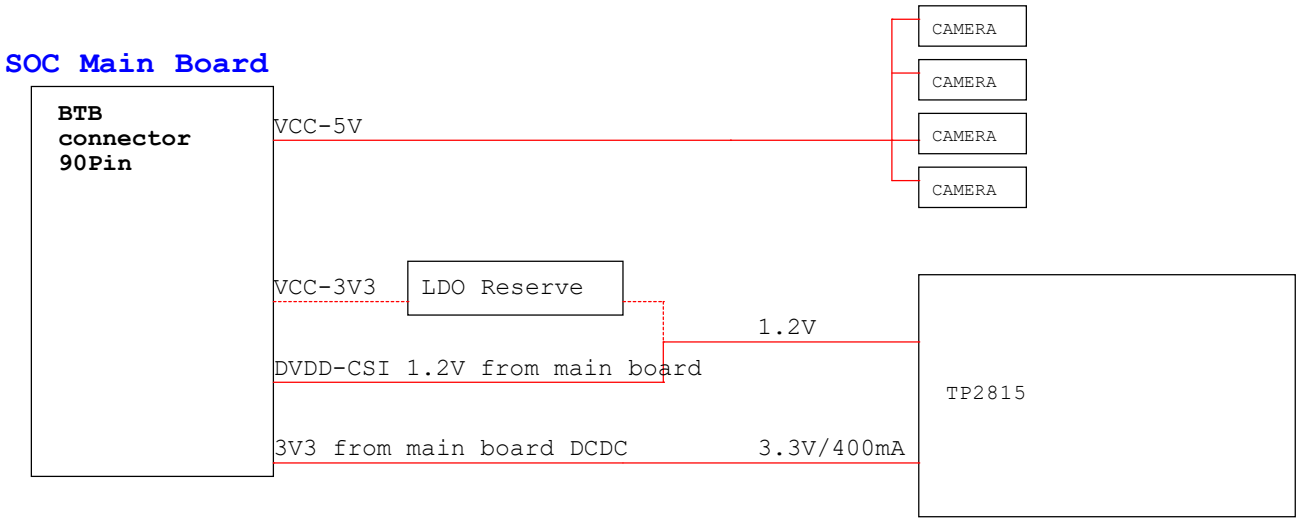

AllWinner Technology Co.,Ltd		
Design Name: SUB_TP2815_MCSI		
Size: A3	Page Name: 02 BLOCK DIAGRAM	Rev: V1.0
Date: Tuesday, April 18, 2023	Sheet 2 of 3	

TP2815

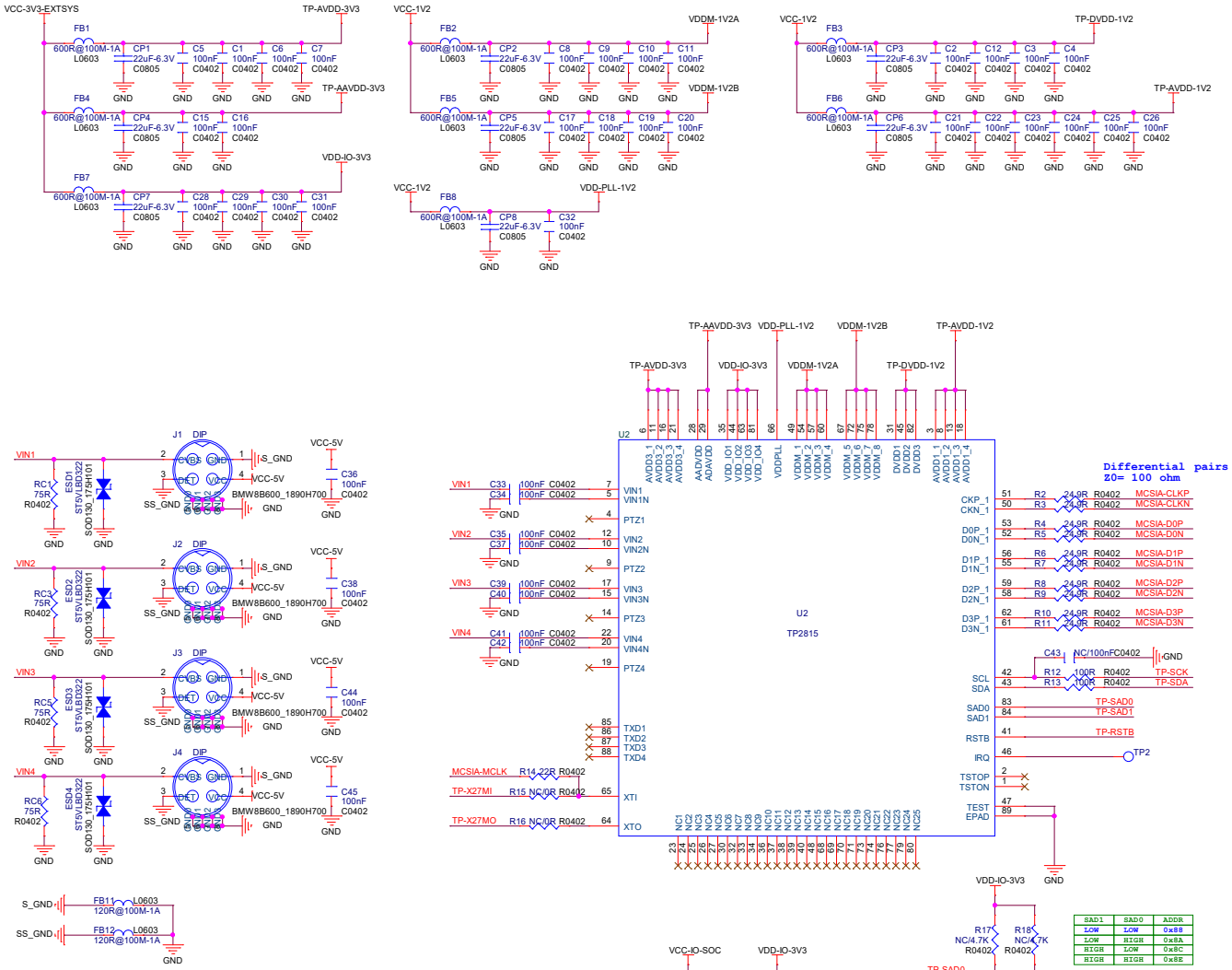

SAD1	SAD0	ADDR
LOW	LOW	0x88
LOW	HIGH	0x8A
HIGH	LOW	0x8C
HIGH	HIGH	0x8E

POWER

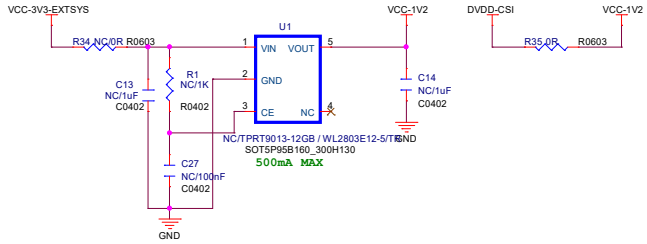

BTB Connector

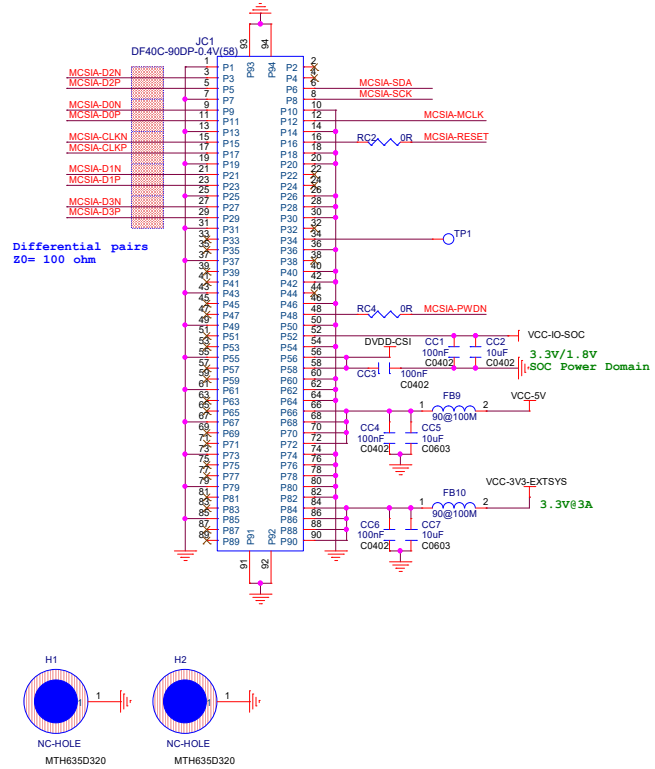

AllWinner Technology Co.,Ltd	
Design Name	SUB_TP2815_MCSI
Size: Custom	Page Name: 03 TP2815
Rev	V1.0
Date: Tuesday, April 18, 2023	Sheet 3 of 3