VERSION HISTORY

Index:

Page1 01 VERSION HISTORY
Page2 02 BLOCK DIAGRAM
Page3 03 POWER TREE SYSTEM
Page4 04 POWER TREE SOC
Page5 05 GPIO ASSIGNMENT
Page6 06 TWI&UART MAP
Page7 07 POWER-SYSTEM
Page8 08 POWER-PMIC1
Page9 09 POWER-PMIC2
Page12 12 T527 SYS
Page11 13 T527 GPIO PB-H
Page12 14 T527 GPIO PI-M
Page13 15 T527 Analog&High-speed
Page14 16 T527 DDR
Page15 17 EMMC/NAND
Page16 18 LCD0
Page17 19 LCD1
Page18 20 CAM
Page19 21 AUDIO CODEC
Page20 22 Audio DSP/Audio OUT
Page21 23 Audio AMP
Page22 24 FM Tunner
Page23 25 SDC/EDP/HDMI/M2
Page24 29 PCIE2.1/USB3.0/USB2.0
Page25 30 ETHERNET
Page26 31 4G Module
Page27 32 WIFI/BT
Page28 33 GNSS/AUTH/ADC/KEY
Page29 34 DEBUG/RS232/TEST
Page30 36 CAN
Page31 37 MCU
Page32 38 EXT-SIG Detect

Revision	Description	Date
Ver 0.9	Release version	2023-04-18
Ver 0.91	1. ADD USB&EDP&PCIE USB3.0 ComboPhy power supply instructions 2. Updated CAN bus ESD device model, RCLAMP0521P-N	2023-08-02
Ver 0.92	1. Modify the VCC33-USB power supply to CLDO3 or ALDO3. The default power supply is CLDO3. 2. Update the connection sequence of USB3.0 RXN/P, TXN/P and JU5 connectors 3. Add the PCB trace length requirements for MIPI DSI	2023-09-11
Ver 1.0	Supports AXP717C, AXP519, Quick charge, HDMI IN, DP IN/OUT and IR TX.	2023-11-23
Ver 1.1	1.Delete CLDO1 driver LED circuit. 2.Change the FB resistance of UP7 ,Use for VDD-VE	2023-12-09
Ver 1.2	1.Add AXP323 delay boot circuit	2024-01-23

Option :

Page4 04 POWER TREE AXP717C
Page8 08 POWER-PMIC1-AXP717B
Page10 10 Quick Charger_1S lion
Page11 11 Quick Charger_2S lion
Page26 26 HDMI IN
Page27 27 TYPEC DP OUT/Analog AUDIO
Page28 28 TypeC DP IN
Page35 35 IR RX/TX

Description Option Note

BLOCK

T527 Hardware Block Diagram

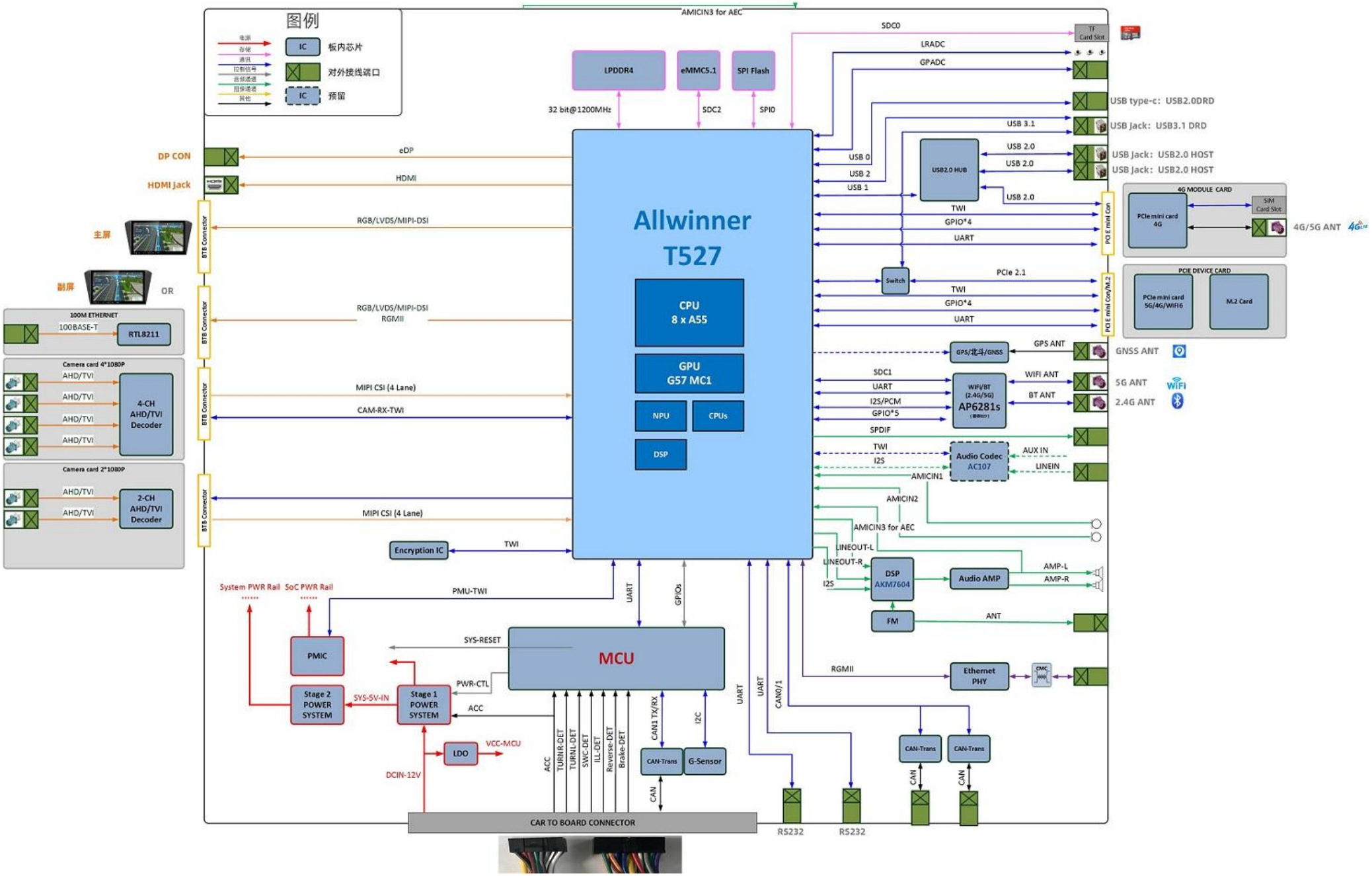

AllWinner Technology Co.,Ltd		
Design Name: T527-STD-AXP717B-LPDDR4-32x1		
Size: A3	Page Name: 02 BLOCK DIAGRAM	Rev: V1.0
Date: Tuesday, January 23, 2024	Sheet 2 of 38	

POWER TREE SYSTEM

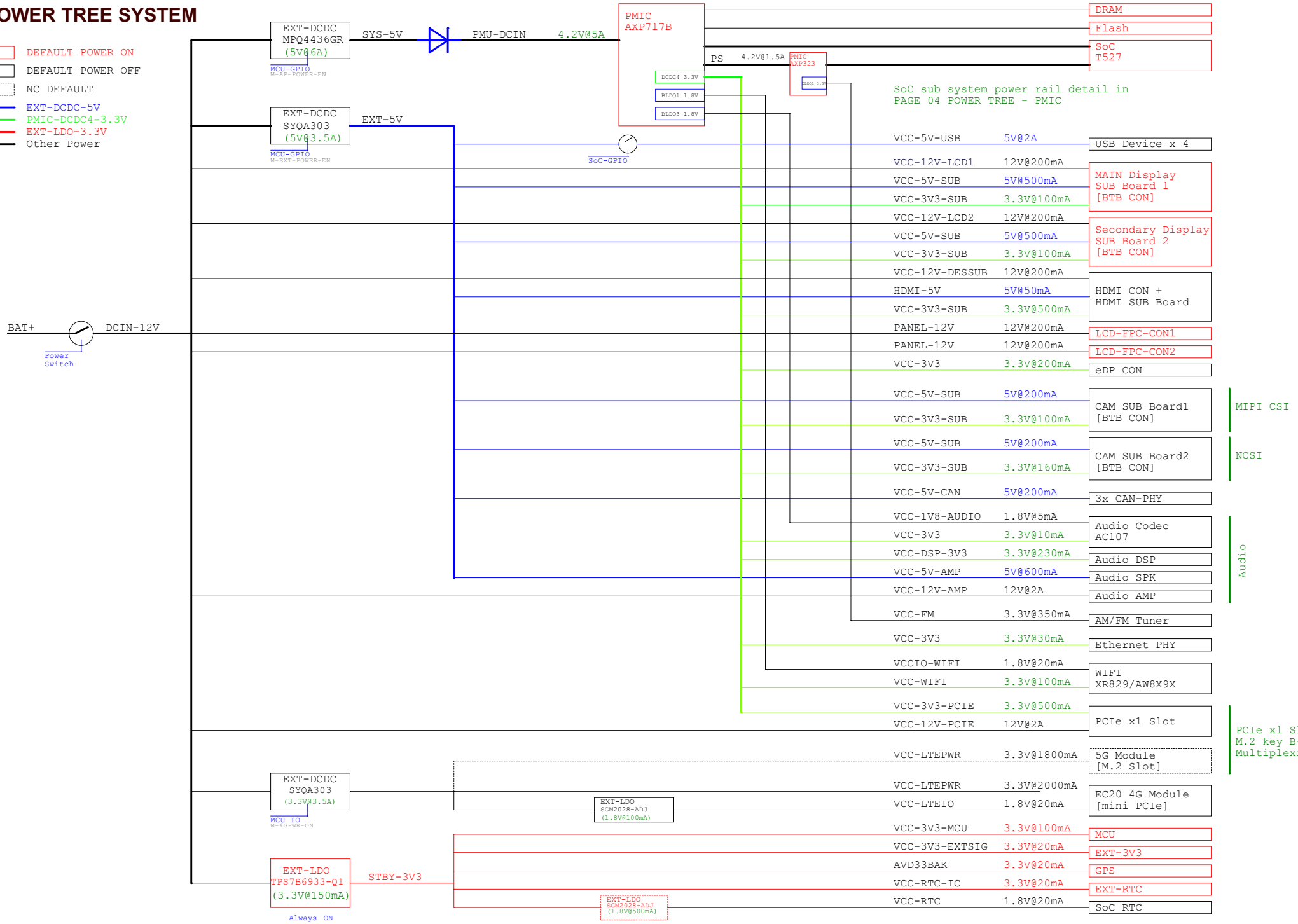

AllWinner Technology Co.,Ltd			
Design Name	T527-STD-AXP717B-LPDDR4-32x1		
Size A2	Page Name 03 POWER TREE SYSTEM		Rev V1.0
Date: Tuesday, January 23, 2024	Sheet 3 of 38		

POWER TREE

DEFAULT POWER ON

DEFAULT POWER OFF

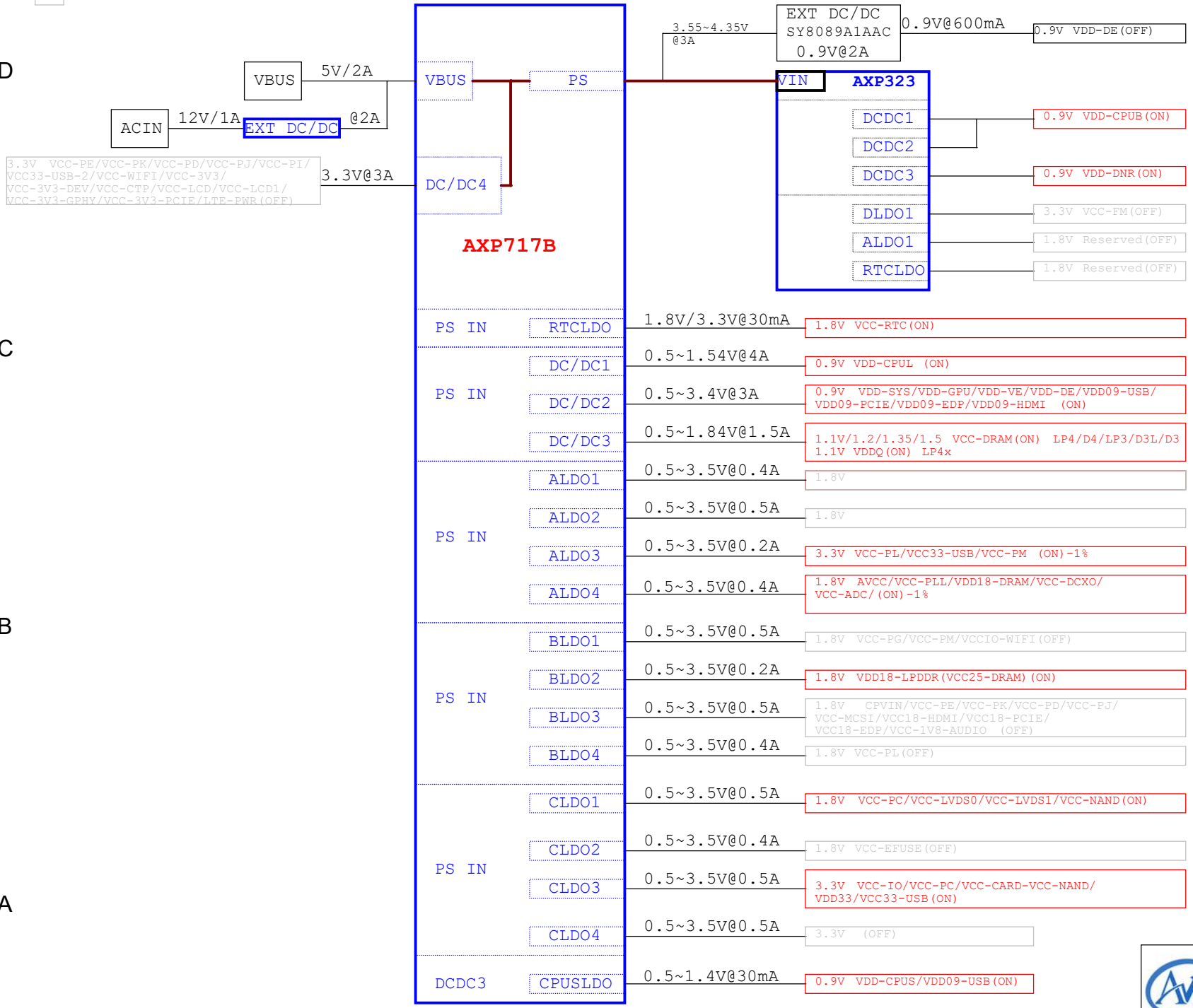

AllWinner Technology Co.,Ltd		
Design Name: T527-STD-AXP717B-LPDDR4-32x1		
Size: A3	Page Name: 04 POWER TREE SOC	Rev: V1.0
Date: Tuesday, January 23, 2024	Sheet 4 of 38	

POWER TREE

DEFAULT POWER ON

DEFAULT POWER OFF

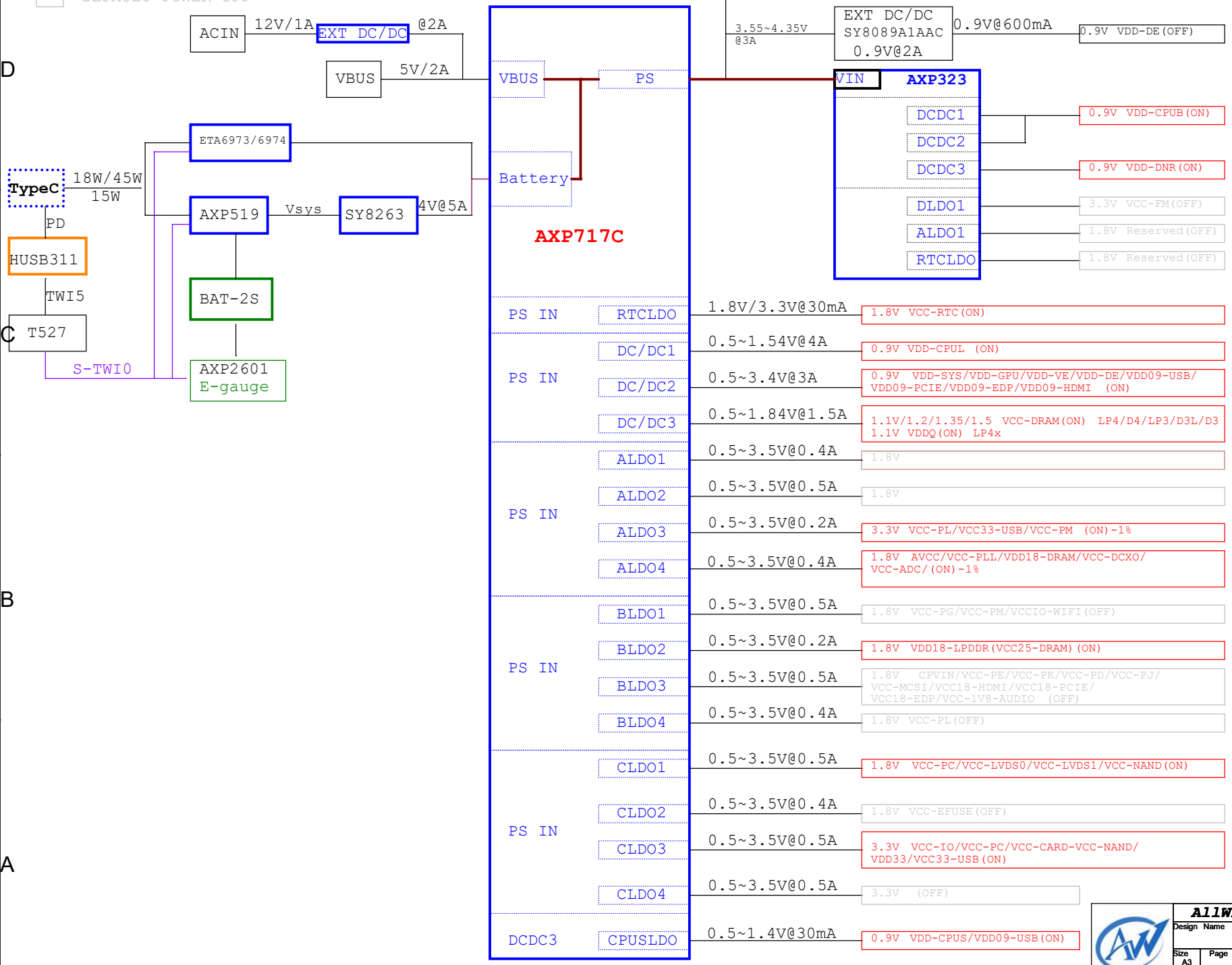

AllWinner Technology Co.,Ltd		
Design Name	T527-STD-AXP717B-LPDDR4-32x1	
Size A3	Page Name 04 POWER TREE AXP717C	Rev V1.0
Date: Tuesday, January 23, 2024	Sheet 4 of 38	

GPIO ASSIGNMENT

SoC GPIO Assistant - Others

Name	Power	CFG	Function
PB0	VCC-IO		UART2-TX (to RS485收发器 U48)
PB1			UART2-RX (to RS485收发器 U48)
PB2			UART2-RTS (to RS485收发器 U48)
PB3			USB1-DRVVBUS
PB4			I2S0-MCLK (to AC107)
PB5			I2S0-BCLK (to AC107)
PB6			I2S0-LRCK (to AC107)
PB7			RST-AC107
PB8			I2S0-DIN0 (to AC107)
PB9			UART0-TX (to 调试串口座 J24)
PB10			UART0-RX (to 调试串口座 J24)
PB11			UART7-RTS (to RS485收发器 U47)
PB12			USB0-DRVVBUS
PB13			UART2-TX (to RS485收发器 U47)
PB14			UART2-RX (to RS485收发器 U47)

PI0	VCC-PI		UART4-TX (to RS232收发器)
PI1			UART4-RX (to RS232收发器)
PI2			LCD0-BL-PWREN
PI3			LCD0-BL-PWM
PI4			LCD1-BL-PWM
PI5			LCD1-BL-PWREN
PI6			UART6-TX (to GPS模块)
PI7			UART6-RX (to GPS模块)
PI8			TWI5-SCK (CTP1/加密IC/4G模块/PCIE插槽)
PI9			TWI5-SDA (CTP1/加密IC/4G模块/PCIE插槽)
PI10			OWA-OUT
PI11			UART3-TX (to RS232收发器)
PI12			UART3-RX (to RS232收发器)
PI13			CTP1-INT
PI14			CTP1-RST
PI15			CAN-TX0
PI16			CAN-RX0

PG0	VCC-PG		WL-SDIO-CLK (SDC1-CLK)
PG1			WL-SDIO-CMD (SDC1-CMD)
PG2			WL-SDIO-D0 (SDC1-D0)
PG3			WL-SDIO-D1 (SDC1-D1)
PG4			WL-SDIO-D2 (SDC1-D2)
PG5			WL-SDIO-D3 (SDC1-D3)
PG6			BT-UART-RX
PG7			BT-UART-TX
PG8			BT-UART-CTS
PG9			BT-UART-RTS
PG10			SYS-STATUS-LED1
PG11			BT-PCM-CLK
PG12			BT-PCM-SYNC
PG13			BT-PCM-DIN
PG14			BT-PCM-DOUT

PH0	VCC-PH		RGMII0-RXD1
PH1			RGMII0-RXD0
PH2			RGMII0-RXCTL
PH3			RGMII0-CLKIN
PH4			RGMII0-TXD1
PH5			RGMII0-TXD0
PH6			RGMII0-TXCK
PH7			RGMII0-TXCTL
PH8			PHYRSTB
PH9			RGMII0-MDC
PH10			RGMII0-MDIO
PH11			PCIE0-PERSTN
PH12			PCIE0-WAKEN
PH13			RGMII0-EPHY-25M
PH14			RGMII0-RXD3
PH15			RGMII0-RXD2
PH16			RGMII0-RXCK
PH17			RGMII0-TXD3
PH18			RGMII0-TXD2
PH19			PCIE0-CLKREQN

SoC GPIO Assistant - Storage

Name	Power	CFG	Function
PC0	VCC-PC		eMMC0-DS
PC1			eMMC0-RST
PC2			SPI0_MOSI
PC3			SPI0_CS0
PC4			SPI0_MISO
PC5			eMMC0-CLK
PC6			eMMC0-CMD
PC7			SYS-STATUS-LED0
PC8			eMMC0-D3
PC9			eMMC0-D4
PC10			eMMC0-D0
PC11			eMMC0-D5
PC12			SPI0_CLK
PC13			eMMC0-D1
PC14			eMMC0-D6
PC15			eMMC0-D2
PC16			eMMC0-D7

PF0	VCC-IO VCC18-PF		SDC0-D1
PF1			SDC0-D0
PF2			SDC0-CLK
PF3			SDC0-CMD
PF4			SDC0-D3
PF5			SDC0-D2
PF6			SDC0-DET

SoC GPIO Assistant - CPUs

Name	Power	CFG	Function
PL0	VCC-PL		S-TWI0-SCK (PMU)
PL1			S-TWI0-SDA (PMU)
PL2			S-UART1-TX (MCU通信/调试串口 J28)
PL3			S-UART1-RX (MCU通信/调试串口 J28)
PL4			S-CAN-TX0
PL5			S-CAN-RX0
PL6			AUDIO-PWR-EN (FM/DSP/AMP)
PL7			AUDIO-MUTE / FM-IRQ
PL8			S-TWI1-SCK (AC107芯片)
PL9			S-TWI1-SDA (AC107芯片)
PL10			USB0-ID
PL11			S-IR-RX
PL12			S-TWI2-SCK (RTC芯片)
PL13			S-TWI2-SDA (RTC芯片)

PM0	VCC-PM		WL-WAKE-AP
PM1			WL-REG-ON
PM2			BT-RESETN
PM3			AP-WAKE-BT
PM4			BT-WAKE-AP
PM5			USB0-VBUSDET

SoC GPIO Assistant - Display

Name	Power	CFG	Function
PD0	VCC-PD		LVDS0-D0P / DSI0-D0P
PD1			LVDS0-D0N / DSI0-D0N
PD2			LVDS0-D1P / DSI0-D1P
PD3			LVDS0-D1N / DSI0-D1N
PD4			LVDS0-D2P / DSI0-CKP
PD5			LVDS0-D2N / DSI0-CKN
PD6			LVDS0-CKP / DSI0-D2P
PD7			LVDS0-CKN / DSI0-D2N
PD8			LVDS0-D3P / DSI0-D3P
PD9			LVDS0-D3N / DSI0-D3N
PD10			LVDS1-D0P / DSI1-D0P
PD11			LVDS1-D0N / DSI1-D0N
PD12			LVDS1-D1P / DSI1-D1P
PD13			LVDS1-D1N / DSI1-D1N
PD14			LVDS1-D2P / DSI1-CKP
PD15			LVDS1-D2N / DSI1-CKN
PD16			LVDS1-CKP / DSI1-D2P
PD17			LVDS1-CKN / DSI1-D2N
PD18			LVDS1-D3P / DSI1-D3P
PD19			LVDS1-D3N / DSI1-D3N
PD20			CTP0-INT
PD21			CTP0-RST
PD22			TWI0-CTP0-SCK
PD23			TWI0-CTP0-SDA

PJ0	VCC-PJ		LVDS2-D0P / RGMII1
PJ1			LVDS2-D0N / RGMII1
PJ2			LVDS2-D1P / RGMII1
PJ3			LVDS2-D1N / RGMII1
PJ4			LVDS2-D2P / RGMII1
PJ5			LVDS2-D2N / RGMII1
PJ6			LVDS2-CKP / RGMII1
PJ7			LVDS2-CKN / RGMII1
PJ8			LVDS2-D3P / RGMII1
PJ9			LVDS2-D3N / RGMII1
PJ10			LVDS3-D0P / RGMII1
PJ11			LVDS3-D0N / RGMII1
PJ12			LVDS3-D1P / RGMII1
PJ13			LVDS3-D1N / RGMII1
PJ14			LVDS3-D2P / RGMII1
PJ15			LVDS3-D2N / RGMII1
PJ16			LVDS3-CKP
PJ17			LVDS3-CKN
PJ18			LVDS3-D3P
PJ19			LVDS3-D3N
PJ20			LCD-D20
PJ21			LCD-D21
PJ22			LCD-D22
PJ23			LCD-D23
PJ24			LCD1-CLK
PJ25			LCD1-DE
PJ26			LCD1-HSYNC
PJ27			LCD1-VSYNC

SoC GPIO Assistant - Camera

Name	Power	CFG	Function
PE0	VCC-PE		MCSIA-MCLK (to 高速连接座 JC8)
PE1			TWI2-SCK (to 高速连接座 JC8)
PE2			TWI2-SDA (to 高速连接座 JC8)
PE3			TWI3-SCK (to 高速连接座 JC2)
PE4			TWI3-SDA (to 高速连接座 JC2)
PE5			I2S2-MCLK / DSP-RDY
PE6			NCSI-D8 / PCM-DSP-CLK
PE7			NCSI-D9 / PCM-DSP-SYNC
PE8			NCSI-D10 / PCM-DSP-DOUT
PE9			NCSI-D11 / PCM-DSP-DIN
PE10			NCSI-D12
PE11			NCSI-D13
PE12			NCSI-D14
PE13			TWI4-AUDIO-SCK (DSP/FM)
PE14			TWI4-AUDIO-SDA (DSP/FM)
PE15			MCSIC-MCLK (to 高速连接座 JC2)

PK0	VCC-PK		MCSIA-D0N
PK1			MCSIA-D0P
PK2			MCSIA-D1N
PK3			MCSIA-D1P
PK4			MCSIA-CKN
PK5			MCSIA-CKP
PK6			MCSIB-D0N
PK7			MCSIB-D0P
PK8			MCSIB-D1N
PK9			MCSIB-D1P
PK10			MCSIC-RESET
PK11			MCSIA-RESET
PK12			MCSIC-D0N
PK13			MCSIC-D0P
PK14			MCSIC-D1N
PK15			MCSIC-D1P
PK16			MCSIC-CKN
PK17			MCSIC-CKP
PK18			MCSID-D0N
PK19			MCSID-D0P
PK20			MCSID-D1N
PK21			MCSID-D1P
PK22			MCSIC-PWDN
PK23			MCSIA-PWDN

GPIO Function Mark:
This IO is unused.
This IO is used for a generial input/output control.
This IO is belong to external MCU.

System Domain Mark:
This IO Group is belong to CPUx Domain.
This IO Group is belong to CPUs Domain.

TWI MAP

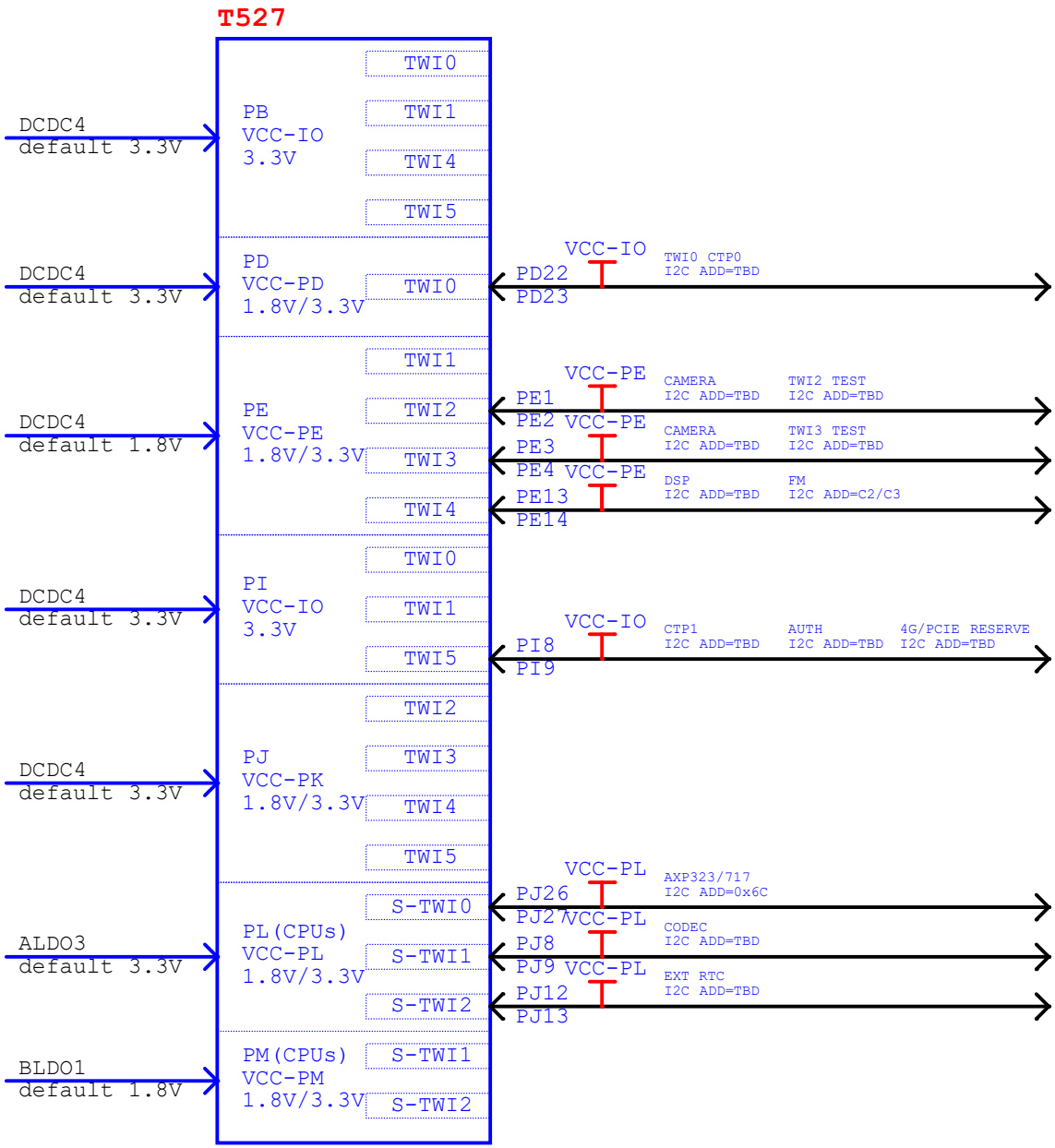

UART MAP

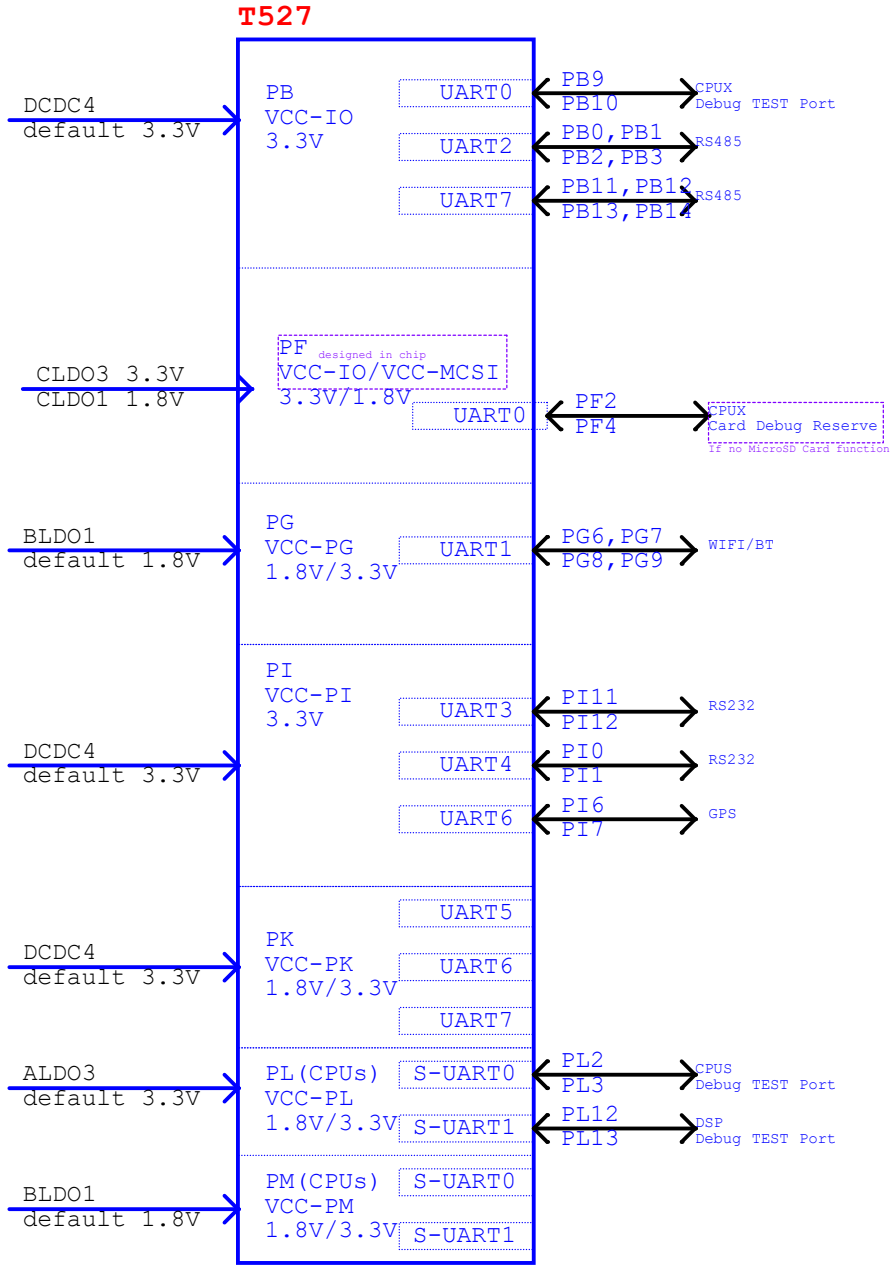

AllWinner Technology Co.,Ltd		
Design Name: T527-STD-AXP717B-LPDDR4-32x1		
Size: A3	Page Name: 06 TWI&UART MAP	Rev: V1.0
Date: Tuesday, January 23, 2024	Sheet 6 of 38	

SYS PWR

DCIN-12V

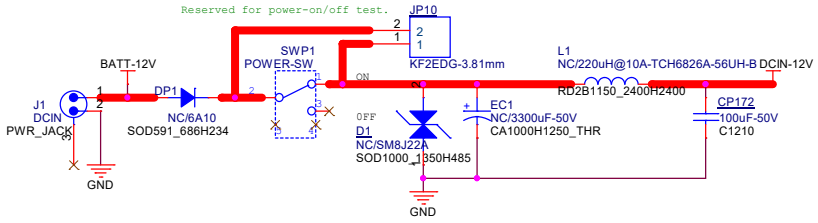

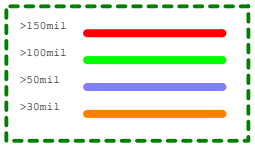

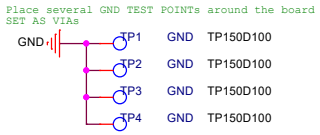

APSYS-5V For SOC、USB-5V CAN

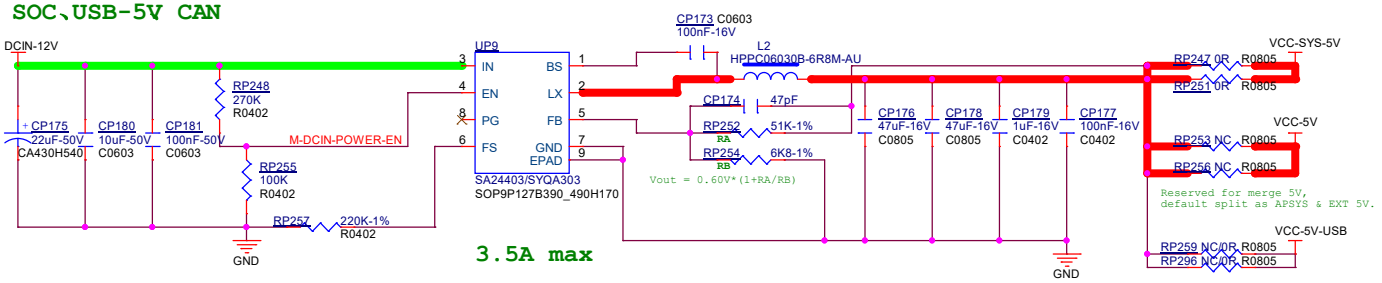

5V For CAM、AMP CN

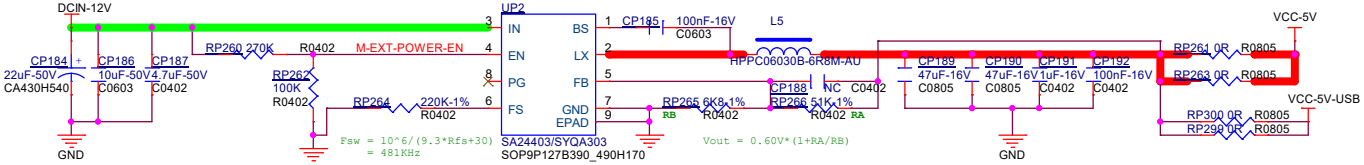

[37] M-DCIN-POWER-EN

[37] M-EXT-POWER-EN

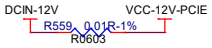

1.2V For RX IC DVDD&AVDD

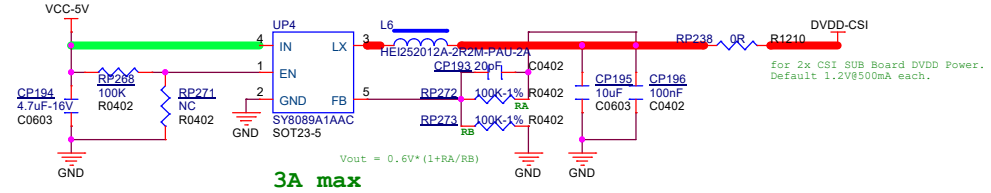

STBY-3V3 For MCU、EXT-DET GPS

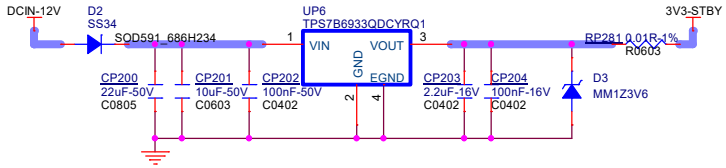

STBY-1V8 For RTC

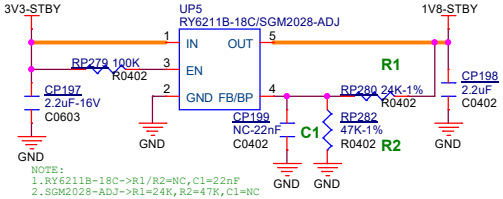

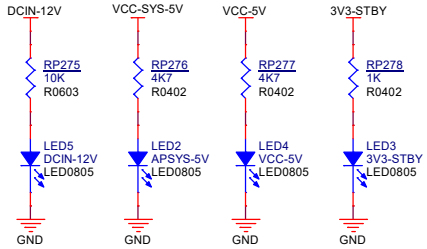

AllWinner Technology Co.,Ltd		
Design Name: T527-STD-AXP717B-LPDDR4-32x1		
Size: A3	Page Name: 07 POWER-SYSTEM	Rev: V1.0
Date: Tuesday, January 23, 2024	Sheet 7 of 38	

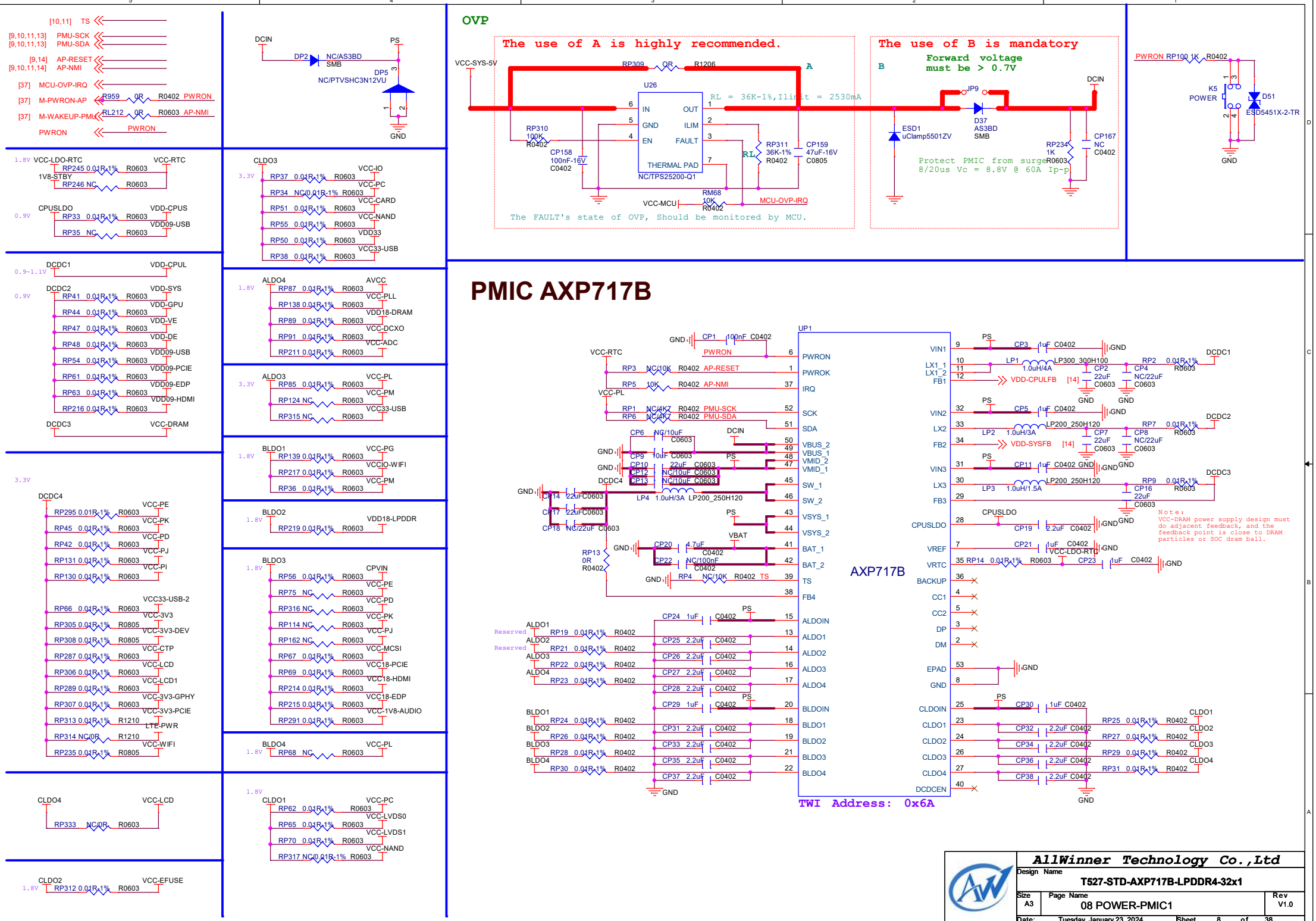
OVP
The use of A is highly recommended.
The use of B is mandatory
Forward voltage must be > 0.7V
RL = 36K-1%,Ilimit = 2530mA
Protect PMIC from surge 8/20us Vc = 8.8V @ 60A Ip-p
The FAULT's state of OVP, Should be monitored by MCU.
NC/TPS25200-Q1
NC/PTVSHC3N12VU
NC/AS3BD SMB
ESD5451X-2-TR
PMIC AXP717B
AXP717B
TWI Address: 0x6A
Note: VCC-DRAM power supply design must do adjacent feedback, and the feedback point is close to DRAM particles or SOC dram ball.
AllWinner Technology Co.,Ltd
Design Name
T527-STD-AXP717B-LPDDR4-32x1
Size A3
Page Name 08 POWER-PMIC1
Rev V1.0
Date: Tuesday, January 23, 2024
Sheet 8 of 38

BAT

IF use the battery temperature sensor: R1=NC otherwise: R1=10k

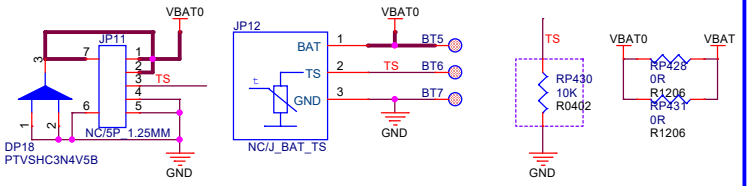

OVP

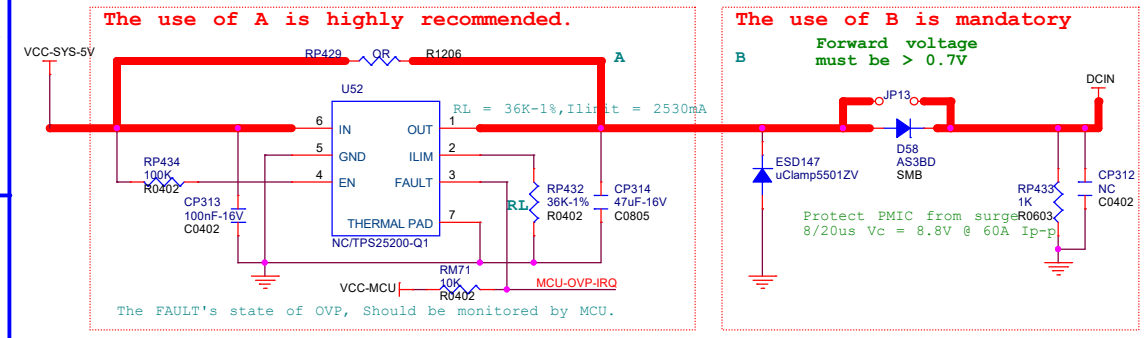

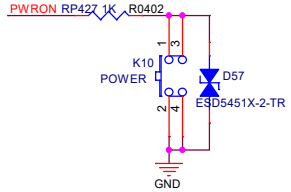

PMIC AXP717C

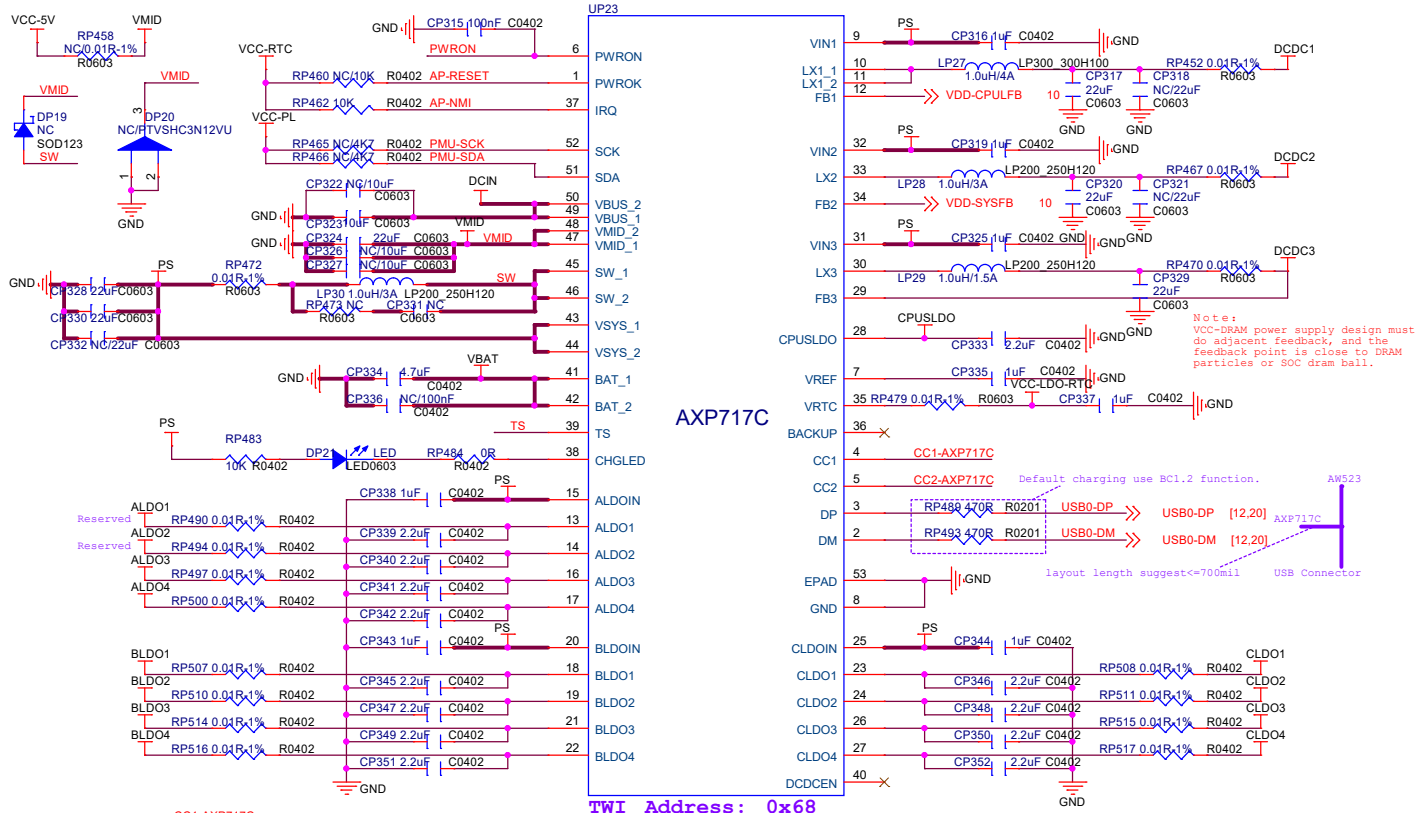

AllWinner Technology Co.,Ltd	
Design Name	T527-STD-AXP717B-LPDDR4-32x1
Size A3	Page Name 08 POWER-PMIC1
Rev	V1.0
Date: Tuesday, January 23, 2024	Sheet 8 of 40

PMIC AXP323

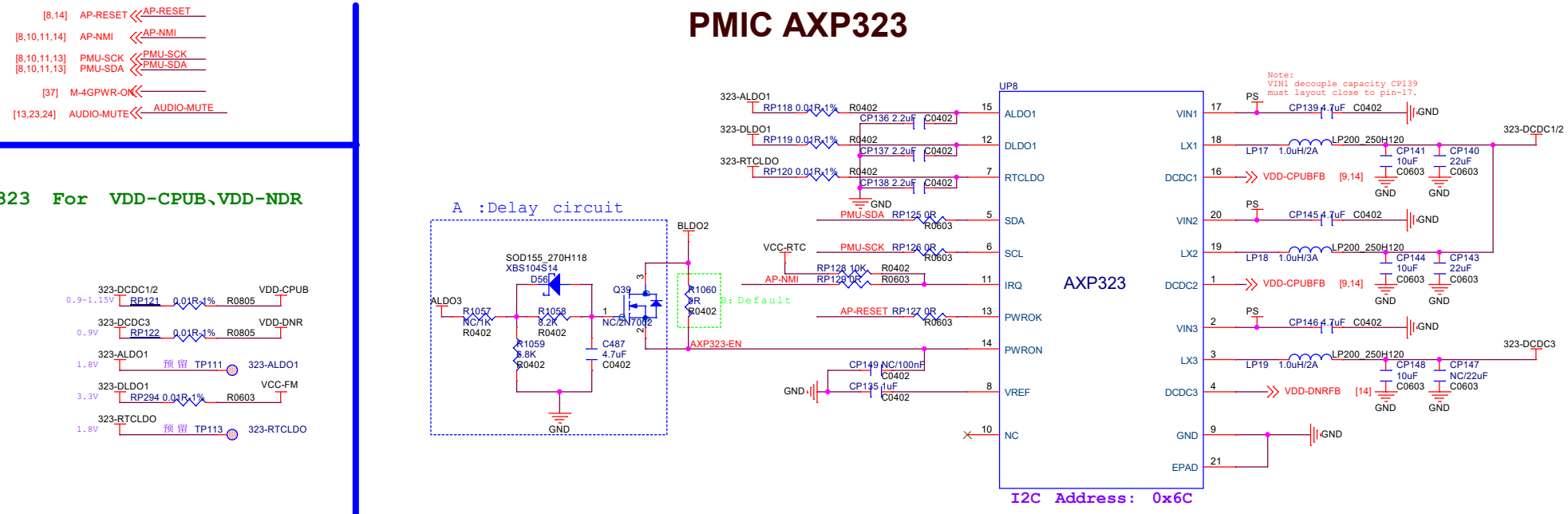

Reserve For DCDC4

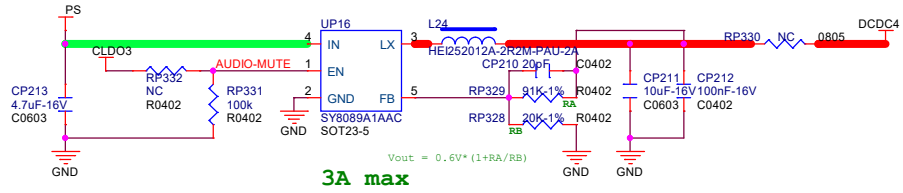

Reserve For VDD-DE/VDD-VE

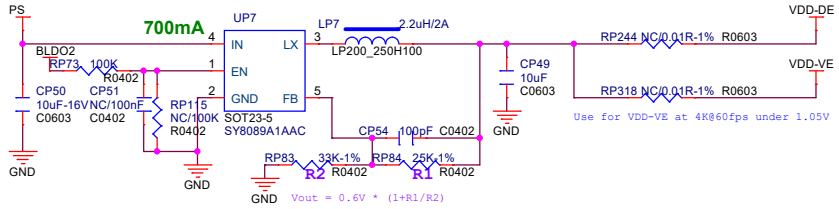

VCC-3V3-LTE、VCC-LTE-IO For LTE Module

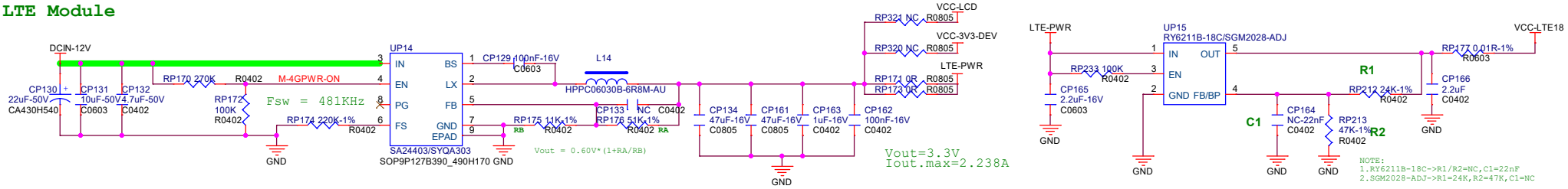

AllWinner Technology Co.,Ltd		
Design Name	T527-STD-AXP717B-LPDDR4-32x1	
Size A3	Page Name 09 POWER-PMIC2	Rev V1.0
Date: Wednesday, January 24, 2024	Sheet 9 of 38	

QUICK CHARGER -1 CELL

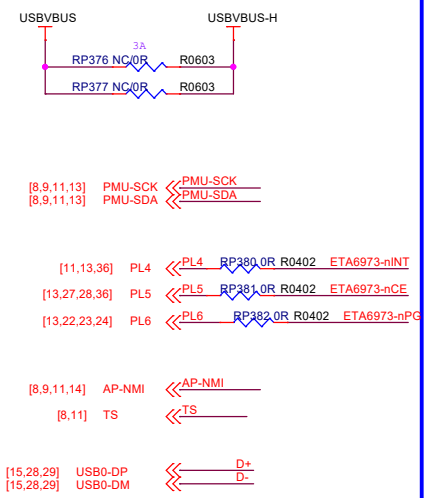

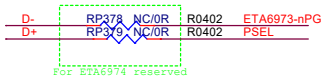

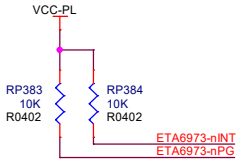

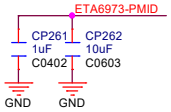

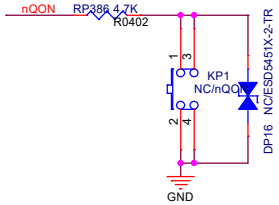

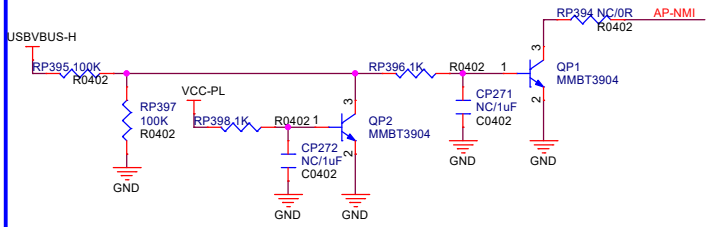

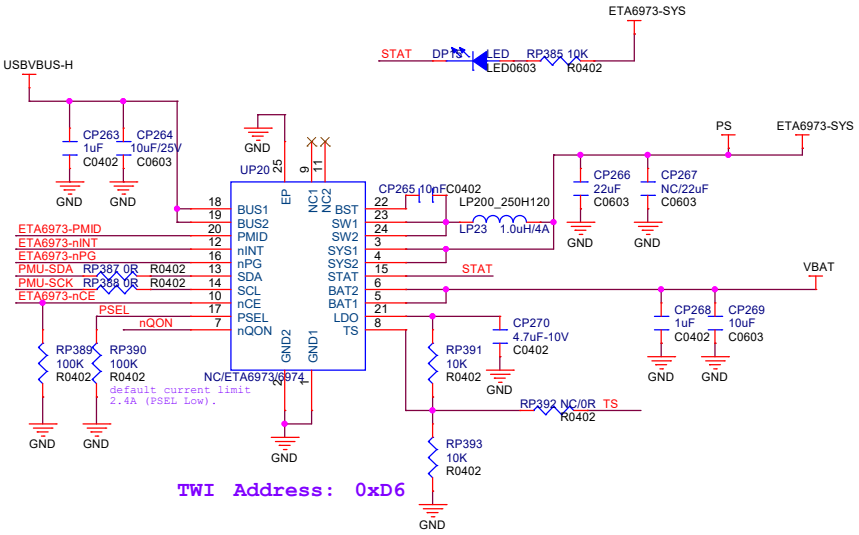

TWI Address: 0xD6

AllWinner Technology Co.,Ltd		
Design Name	T527-STD-AXP717B-LPDDR4-32x1	
Size A3	Page Name 10 Quick Charger_1S lion	Rev
Date: Tuesday, January 23, 2024	Sheet 10 of 38	

QUICK CHARGER -nCELL

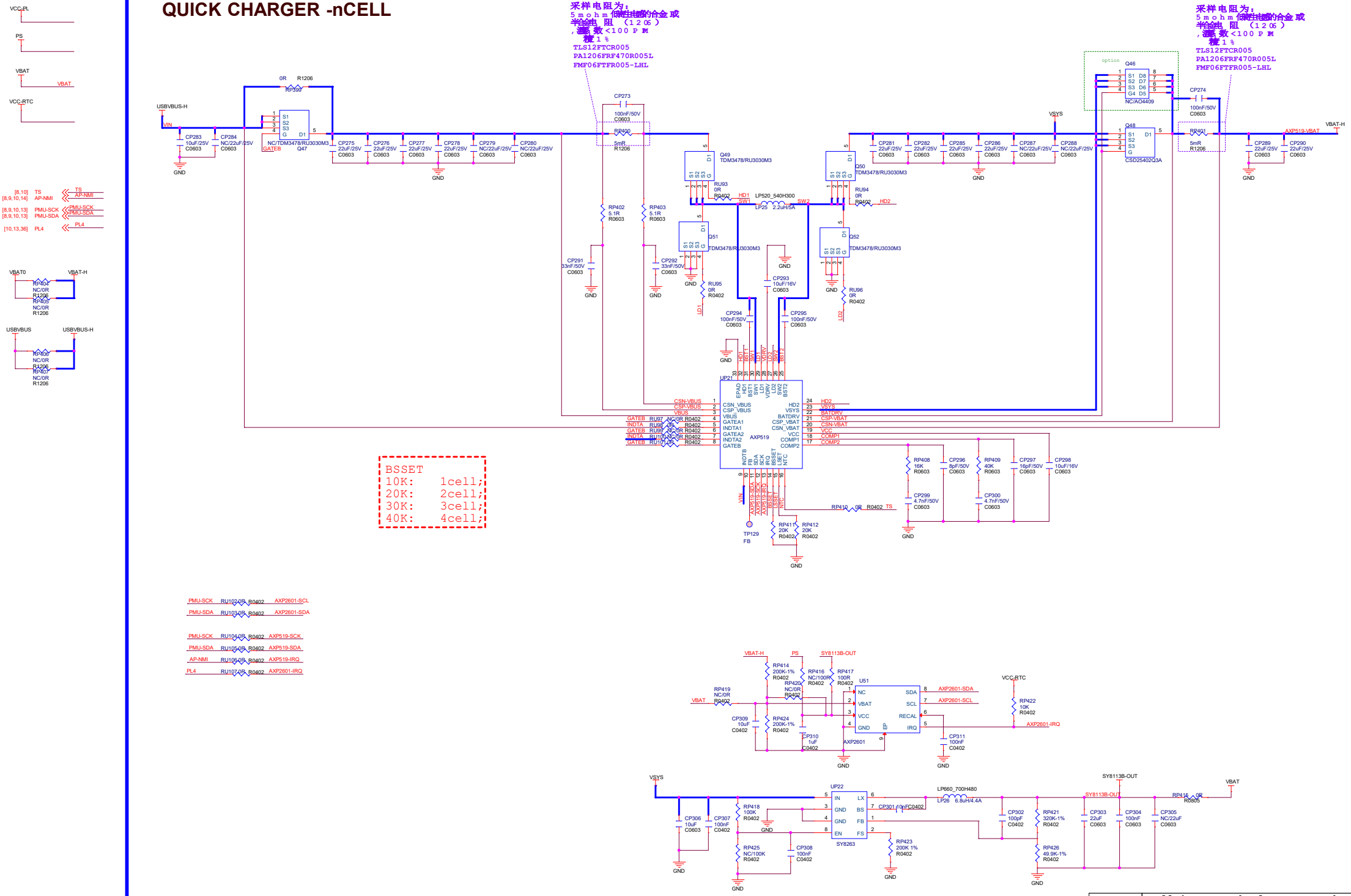

AllWinner Technology Co.,Ltd	
Design Name	T527-STD-AXP717B-LPDDR4-32x1
Size A2	Page Name 11 Quick Charger_2S lion
Rev	
Date: Tuesday, January 23, 2024	Sheet 11 of 40

SYS

Note:
1. Pin X32KFOUT power domain is VCC-PM.
2. Do not pull-up to VCC-RTC.

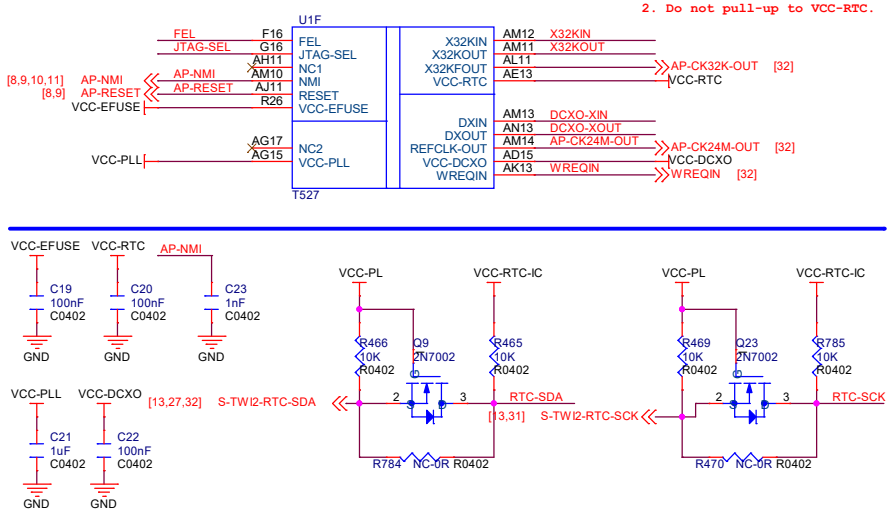

SYS-TEST

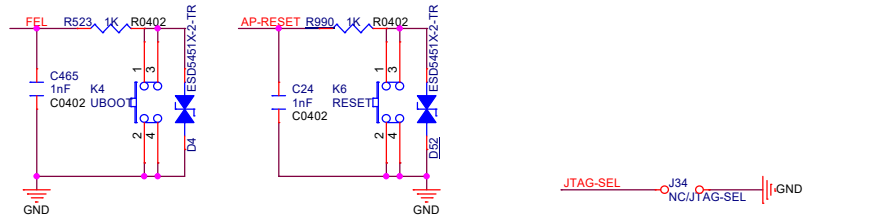

EXT-RTC

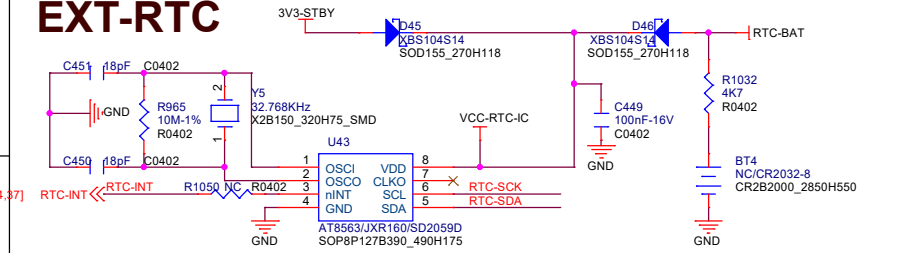

OSC

DCXO-SYS

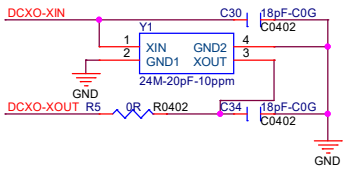

OSC-32K

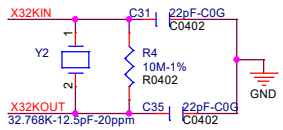

Option

The 32K internal clock is biased,
If this deviation can be accepted,
the crystal vibration can be avoided.

CORE POWER

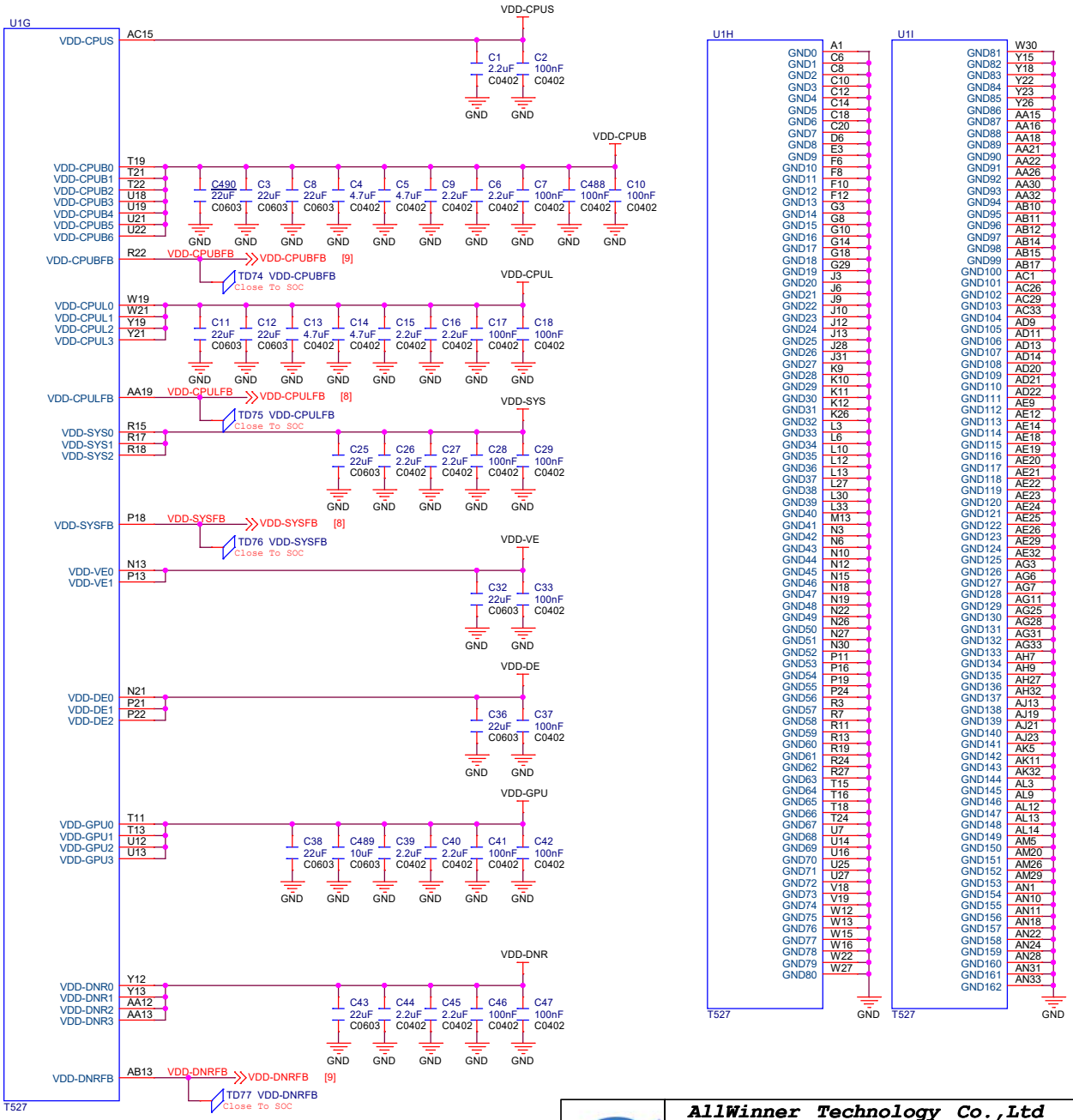

AllWinner Technology Co.,Ltd		
Design Name: T527-STD-AXP717B-LPDDR4-32x1		
Size: A3	Page Name: 12 T527 SYS	Rev: V1.0
Date: Tuesday, January 23, 2024	Sheet 12 of 38	

GPIO

U1B

3.3V

[34] CPUX-TMS	UART2-TX	N28	PB0/UART2-TX/SPI2-CS0/JTAG-MS/LCD0-D0/PWM0-6/PB-EINT0
[34] CPUX-TCK	UART2-RX	N29	PB1/UART2-RX/SPI2-CLK/JTAG-CK/LCD0-D1/PWM0-7/PB-EINT1
[34] CPUX-TDO	UART2-RTS	M31	PB2/UART2-RTS/SPI2-MOSI/JTAG-DO/LCD0-D8/CAN-TX0/PB-EINT2
[29,34] CPUX-TDI	UART2-CTS	M32	PB3/UART2-CTS/SPI2-MISO/JTAG-DI/LCD0-D9/CAN-RX0/PB-EINT3
[21] I2S0-MCLK		N31	PB4/TWI1-SCK/I2S0-MCLK/TRACE-DATA2/PWM0-8/HDMI-SCL/PB-EINT4
[21] I2S0-BCLK		N32	PB5/TWI1-SDA/I2S0-BCLK/TRACE-CLK/PWM0-9/HDMI-SDA/PB-EINT5
[21] I2S0-LRCK		N33	PB6/I2S0-LRCK/TRACE-DATA0/PWM0-10/HDMI-CEC/PB-EINT6
[21] RST-AC107		P31	PB7/OWA-IN/I2S0-DOUT0/I2S0-DIN1/LCD0-D16/PWM0-11/PB-EINT7
[21] I2S0-DIN		P32	PB8/OWA-OUT/I2S0-DIN0/I2S0-DOUT1/LCD0-D17/PWM0-0/PB-EINT8
[34] UART-0-CPUX-TX		R28	PB9/UART0-TX/TWI0-SCK/TRACE-DATA1/I2S0-DIN2/I2S0-DOUT2/PB-EINT9
[34] UART-0-CPUX-RX		R29	PB10/UART0-RX/TWI0-SDA/PWM0-1/I2S0-DIN3/I2S0-DOUT3/PB-EINT10
[34] UART7-RTS		R30	PB11/TWI5-SCK/UART7-RTS/SPI1-CS0/PWM0-2/PB-EINT11
[29,34] UART7-CTS		R31	PB12/TWI5-SDA/UART7-CTS/SPI1-CLK/PWM0-3/PB-EINT12
[34] UART7-TX		R32	PB13/TWI4-SCK/UART7-TX/SPI1-MOSI/PWM0-4/PB-EINT13
[34] UART7-RX		R33	PB14/TWI4-SDA/UART7-RX/SPI1-MISO/PWM0-5/PB-EINT14

eMMC-DS	NWE	W28	PC0/NAND-WE/SDC2-DS/PC-EINT0
eMMC-RST	NALE	Y31	PC1/NAND-ALE/SDC2-RST/PC-EINT1
	NCLE	U30	PC2/NAND-CLE/SPI0-MOSI/SPIF-MOSI/PC-EINT2
	NCE1	U29	PC3/NAND-CE1/SPI0-CS0/SPIF-CS0/PC-EINT3
	NCE0	U28	PC4/NAND-CE0/SPI0-MISO/SPIF-MISO/PC-EINT4
eMMC-CLK	NRE	RM1 33R R0402 Y32	PC5/NAND-RE/SDC2-CLK/PC-EINT5
eMMC-CMD	NRB0	W33	PC6/NAND-RB0/SDC2-CMD/PC-EINT6
	NRB1	W29	PC7/NAND-RB1/SPI0-CS1/SPIF-DQS/PC-EINT7
eMMC-D3	NDQ7	W32	PC8/NAND-DQ7/SDC2-D3/SPIF-D7/PC-EINT8
eMMC-D4	NDQ6	W31	PC9/NAND-DQ6/SDC2-D4/SPIF-D6/PC-EINT9
eMMC-D0	NDQ5	V32	PC10/NAND-DQ5/SDC2-D0/SPIF-D5/PC-EINT10
eMMC-D5	NDQ4	V31	PC11/NAND-DQ4/SDC2-D5/SPIF-D4/PC-EINT11
	NDQS	U33	PC12/NAND-DQS/SPI0-CLK/SPIF-CLK/PC-EINT12
eMMC-D1	NDQ3	U32	PC13/NAND-DQ3/SDC2-D1/PC-EINT13
eMMC-D6	NDQ2	U31	PC14/NAND-DQ2/SDC2-D6/PC-EINT14
eMMC-D2	NDQ1	T32	PC15/NAND-DQ1/SDC2-D2/SPI0-WP/SPIF-WP/PC-EINT15
eMMC-D7	NDQ0	T31	PC16/NAND-DQ0/SDC2-D7/SPI0-HOLD/SPIF-HOLD/PC-EINT16
VCC-PC		U26	VCC-PC

3.3V

[18] LVDS0-D0P		D32	PD0/LCD0-D2/LVDS0-D0P/DSI0-D0P/PWM0-0/PD-EINT0
[18] LVDS0-D0N		D33	PD1/LCD0-D3/LVDS0-D0N/DSI0-D0N/PWM0-1/PD-EINT1
[18] LVDS0-D1P		E30	PD2/LCD0-D4/LVDS0-D1P/DSI0-D1P/PWM0-2/PD-EINT2
[18] LVDS0-D1N		E31	PD3/LCD0-D5/LVDS0-D1N/DSI0-D1N/PWM0-3/PD-EINT3
[18] LVDS0-D2P		E32	PD4/LCD0-D6/LVDS0-D2P/DSI0-CKP/PWM0-4/PD-EINT4
[18] LVDS0-D2N		E33	PD5/LCD0-D7/LVDS0-D2N/DSI0-CKN/PWM0-5/PD-EINT5
[18] LVDS0-CKP		F32	PD6/LCD0-D10/LVDS0-CKP/DSI0-D2P/PWM0-6/PD-EINT6
[18] LVDS0-CKN		F33	PD7/LCD0-D11/LVDS0-CKN/DSI0-D2N/PWM0-7/PD-EINT7
[18] LVDS0-D3P		G30	PD8/LCD0-D12/LVDS0-D3P/DSI0-D3P/PWM0-8/PD-EINT8
[18] LVDS0-D3N		G31	PD9/LCD0-D13/LVDS0-D3N/DSI0-D3N/PWM0-9/PD-EINT9
[18] LVDS1-D0P		G32	PD10/LCD0-D14/LVDS1-D0P/DSI1-D0P/PWM0-10/SPI1-CS0/DBI-CSX/PD-EINT10
[18] LVDS1-D0N		G33	PD11/LCD0-D15/LVDS1-D0N/DSI1-D0N/PWM0-11/SPI1-CLK/DBI-SCLK/PD-EINT11
[18] LVDS1-D1P		H31	PD12/LCD0-D18/LVDS1-D1P/DSI1-D1P/PWM0-12/SPI1-MOSI/DBI-SDO/PD-EINT12
[18] LVDS1-D1N		H32	PD13/LCD0-D19/LVDS1-D1N/DSI1-D1N/PWM0-13/SPI1-MISO/DBI-SDI/DBI-TE/DBI-DCX/PD-EINT13
[18] LVDS1-D2P		J29	PD14/LCD0-D20/LVDS1-D2P/DSI1-CKP/PWM0-14/UART3-TX/PD-EINT14
[18] LVDS1-D2N		J30	PD15/LCD0-D21/LVDS1-D2N/DSI1-CKN/PWM0-15/UART3-RX/PD-EINT15
[18] LVDS1-CKP		J32	PD16/LCD0-D22/LVDS1-CKP/DSI1-D2P/PWM1-0/UART3-RTS/PD-EINT16
[18] LVDS1-CKN		J33	PD17/LCD0-D23/LVDS1-CKN/DSI1-D2N/PWM1-1/UART3-CTS/PD-EINT17
[18] LVDS1-D3P		K31	PD18/LCD0-CLK/LVDS1-D3P/DSI1-D3P/PWM1-2/UART4-TX/PD-EINT18
[18] LVDS1-D3N		K32	PD19/LCD0-DE/LVDS1-D3N/DSI1-D3N/PWM1-3/UART4-RX/PD-EINT19
[18] CTP0-INT		L28	PD20/LCD0-HSYNC/PWM0-2/UART2-TX/UART7-RTS/UART4-RTS/PD-EINT20
[18] CTP0-RST		L29	PD21/LCD0-VSYNC/PWM0-3/UART2-RX/UART7-CTS/UART4-CTS/PD-EINT21
[18] TWI0-CTP0-SCK		L31	PD22/PWM0-1/SPI1-HOLD/DBI-DCX/DBI-WRX/UART2-RTS/UART7-TX/TWI0-SCK/PD-EINT22
[18] TWI0-CTP0-SDA		L32	PD23/PWM0-0/SPI1-WP/DBI-TE/UART2-CTS/UART7-RX/TWI0-SDA/PD-EINT23
VCC-PD		L26	VCC-PD
VCC-LVDS0		N24	VCC-LVDS0

T527

		E6	PE0/MCSI0-MCLK/PE-EINT0
		C4	PE1/TWI2-SCK/UART4-TX/PE-EINT1
		E5	PE2/TWI2-SDA/UART4-RX/PE-EINT2
		E4	PE3/TWI3-SCK/UART4-RTS/PE-EINT3
		C3	PE4/TWI3-SDA/UART4-CTS/PE-EINT4
		B3	PE5/MCSI1-MCLK/PLL-LOCK-DBG/I2S2-MCLK/LEDC/PE-EINT5
		A3	PE6/I2S2-BCLK/LCD0-TRIG/NCSI-D8/PE-EINT6
		A2	PE7/I2S2-LRCK/LCD1-TRIG/NCSI-D9/PE-EINT7
		B2	PE8/I2S2-DOUT0/LCD2-TRIG/NCSI-D10/PE-EINT8
		B1	PE9/I2S2-DIN0/NCSI-D11/PE-EINT9
		C2	PE10/MCSI3-MCLK/PWM0-3/NCSI-D12/PE-EINT10
		J7	PE11/TWI1-SCK/UART5-RTS/SPI2-CS0/UART6-TX/NCSI-D13/PE-EINT11
		C1	PE12/TWI1-SDA/UART5-CTS/SPI2-CLK/UART6-RX/NCSI-D14/PE-EINT12
		G6	PE13/TWI4-SCK/UART5-TX/SPI2-MOSI/UART6-RTS/CSI0-XVS-FSYNC/PE-EINT13
		L7	PE14/TWI4-SDA/UART5-RX/SPI2-MISO/UART6-CTS/CSI1-XVS-FSYNC/PE-EINT14
		N7	PE15/MCSI2-MCLK/PWM0-2/NCSI-D15/PE-EINT15
		L9	VCC-PE

RV2 33R R0402		MCSIA-MCLK	[20]
		MCSIA-SCK	[20]
		MCSIA-SDA	[20]
		MCSIC-SCK	[20]
		MCSIC-SDA	[20]
		I2S2-MCLK	[21,22]
		NCSI-D8	[20,21,22,30]
		NCSI-D9	[20,21,22,30]
		NCSI-D10	[20,21,22,30]
		NCSI-D11	[20,21,22,30]
		NCSI-D12	[20]
	PE11	NCSI-D13	[20,26]
	PE12	NCSI-D14	[20,26]
	PE13	TWI4-AUDIO-SCK	[22,24,26]
	PE14	TWI4-AUDIO-SDA	[22,24,26]
RV4 33R R0402		MCSIC-MCLK	[20]
		VCC-PE	

PE6-12,PE15 SET AS NCSI.

3.3V

		B20	PF0/SDC0-D1/JTAG-MS/TRACE-DATA2/I2S3-DIN0/I2S3-DOUT1/PF-EINT0
		A20	PF1/SDC0-D0/JTAG-DI/TRACE-DATA1/I2S3-DOUT0/I2S3-DIN1/PF-EINT1
		C19	PF2/SDC0-CLK/UART0-TX/I2S3-DIN2/I2S3-DOUT2/PF-EINT2
		B19	PF3/SDC0-CMD/JTAG-DO/TRACE-DATA0/I2S3-LRCK/PF-EINT3
		B18	PF4/SDC0-D3/UART0-RX/I2S3-DIN3/I2S3-DOUT3/PF-EINT4
		A18	PF5/SDC0-D2/JTAG-CK/TRACE-CLK/I2S3-BCLK/PF-EINT5
		D20	PF6/I2S3-MCLK/PF-EINT6

RC1 33R R0402		SDC0-D1	[25]
		SDC0-D0	[25]
		SDC0-CLK	[25]
		SDC0-CMD	[25]
		SDC0-D3	[25]
		SDC0-D2	[25]
		SDC0-DET	[25]

		R1	PG0/SDC1-CLK/PG-EINT0
		R2	PG1/SDC1-CMD/PG-EINT1
		P3	PG2/SDC1-D0/PCIE0-PERSTN/PG-EINT2
		P2	PG3/SDC1-D1/PCIE0-WAKEN/PG-EINT3
		T3	PG4/SDC1-D2/PCIE0-CLKREQN/PG-EINT4
		T2	PG5/SDC1-D3/PG-EINT5
		R6	PG6/UART1-TX/PG-EINT6
		R5	PG7/UART1-RX/PG-EINT7
		R4	PG8/UART1-RTS/PG-EINT8
		U6	PG9/UART1-CTS/PG-EINT9
		U5	PG10/I2S1-MCLK/PG-EINT10
		U4	PG11/I2S1-BCLK/PG-EINT11
		U3	PG12/I2S1-LRCK/PG-EINT12
		U2	PG13/I2S1-DOUT0/I2S1-DIN1/PG-EINT13
		U1	PG14/I2S1-DIN0/I2S1-DOUT1/PG-EINT14
		T9	VCC-PG

RW1 33R R0402		WL-SDIO-CLK	[32]
		WL-SDIO-CMD	[32]
		WL-SDIO-D0	[32]
		WL-SDIO-D1	[32]
		WL-SDIO-D2	[32]
		WL-SDIO-D3	[32]
		BT-UART-TX	[32]
		BT-UART-RX	[32]
		BT-UART-RTS	[32]
		BT-UART-CTS	[32]
		PG10	[33]
		BT-PCM-CLK	[32]
		BT-PCM-SYNC	[32]
		BT-PCM-DOUT	[32]
		BT-PCM-DIN	[32]
		VCC-PG	

1.8V

		F18	PH0/TWI0-SCK/RGMII0-RXD1/RMII0-RXD1/PH-EINT0
		E18	PH1/TWI0-SDA/RGMII0-RXD0/RMII0-RXD0/PH-EINT1
		D18	PH2/TWI1-SCK/CPU-CUR-W/I2S2-DIN3/RGMII0-RXCTL/RMII0-CRS-DV/I2S2-DOUT3/PH-EINT2
		C17	PH3/TWI1-SDA/IR-TX/I2S2-DIN2/RGMII0-CLKIN/RMII0-RXER/I2S2-DOUT2/PH-EINT3
		B17	PH4/UART3-TX/SPI1-CS0/CPU-CUR-W/RGMII0-TXD1/RMII0-TXD1/PH-EINT4
		E16	PH5/UART3-RX/SPI1-CLK/LEDC/RGMII0-TXD0/RMII0-TXD0/PH-EINT5
		G12	PH6/UART3-RTS/SPI1-MOSI/OWA-IN/RGMII0-TXCK/RMII0-TXCK/PH-EINT6
		F14	PH7/UART3-CTS/SPI1-MISO/OWA-OUT/RGMII0-TXCTL/RMII0-TXEN/PH-EINT7
	PH8	D16	PH8/DMIC-CLK/SPI2-CS0/I2S2-MCLK/I2S2-DIN2/PH-EINT8
		C16	PH9/DMIC-DATA0/SPI2-CLK/I2S2-BCLK/RGMII0-MDC/PH-EINT9
		B16	PH10/DMIC-DATA1/SPI2-MOSI/I2S2-LRCK/RGMII0-MDIO/PH-EINT10
	PH11	A16	PH11/DMIC-DATA2/SPI2-MISO/I2S2-DOUT0/I2S2-DIN1/PCIE0-PERSTN/PH-EINT11
	PH12	C15	PH12/DMIC-DATA3/TWI3-SCK/I2S2-DIN0/I2S2-DOUT1/PCIE0-WAKEN/PH-EINT12
	PH13	B15	PH13/TWI3-SDA/I2S3-MCLK/RGMII0-EPHY-25M/PH-EINT13
	PH14	E14	PH14/I2S3-BCLK/RGMII0-RXD3/RMII0-NULL/PH-EINT14
	PH15	D14	PH15/I2S3-LRCK/RGMII0-RXD2/RMII0-NULL/PH-EINT15
		B14	PH16/I2S3-DOUT0/I2S3-DIN1/RGMII0-RXCK/RMII0-NULL/CLK-FANOUT0/PH-EINT16
		B13	PH17/I2S3-DOUT1/I2S3-DIN0/RGMII0-TXD3/RMII0-NULL/PH-EINT17
	IR-TX	A14	PH18/IR-TX/I2S3-DOUT2/I2S3-DIN2/RGMII0-TXD2/RMII0-NULL/PH-EINT18
	PH19	C13	PH19/IR-RX/I2S3-DOUT3/I2S3-DIN3/LEDC/PCIE0-CLKREQN/PH-EINT19
		L15	VCC-IO

		RGMII0-RXD1	[31]
		RGMII0-RXD0	[31]
		RGMII0-RXCTL	[31]
		RGMII0-CLKIN-125M	[31]
		RGMII0-TXD1	[31]
		RGMII0-TXD0	[31]
		RGMII0-TXCK	[31]
		RGMII0-TXCTL	[31]
	PH8	PHYRSTB	[27,31]
		RGMII0-MDC	[31]
		RGMII0-MDIO	[31]
	PH11	PCIE21-PERSTn	[25,27,29]
	PH12	PCIE21-WAKEn	[25,27,29]
	PH13	EPHY-CLK-25M	[26,28,31]
	PH14	RGMII0-RXD3	[26,28,31]
	PH15	RGMII0-RXD2	[26,27,28,31]
		RGMII0-RXCK	[31]
		RGMII0-TXD3	[31]
	IR-TX	RGMII0-TXD2	[31,35]
	PH19	PCIE21-CLKREQn	[25,26,28,29]
		VCC-IO	

3.3V

IR-TX — IR-TX [31,35]

GPIO use guide:
1.Note that the voltage of SOC GPIO must matches the external IO voltage.
2.The pull up voltage of the GPIO is selected to correspond to the power rail voltage of GPIO.
3.Power current is PCB layout reference minimum.

VCC-PC	VCC-PE	VCC-PD	VCC-LVDS0	VCC-PG	VCC-IO
C440 100nF C0402	C439 100nF C0402	C49 10uF C0402, C50 100nF C0402	C51 100nF C0402	C54 100nF C0402	C55 1uF C0402, C56 100nF C0402
GND	GND	GND, GND	GND	GND	GND, GND

[34]	UART2-TX	[17]	NWE	[20,26]	PE11
[34]	UART2-RX	[17]	NALE	[20,26]	PE12
[34]	UART2-RTS	[17]	NCLE	[22,24,26]	PE13
[29,34]	UART2-CTS	[17]	NRE	[22,24,26]	PE14
		[17]	NDQS		
		[17]	NCE0	[27,31]	PH8
[17]	eMMC-DS	[17]	NCE1	[25,27,29]	PH11
[17]	eMMC-RST	[17]	NRB0	[25,27,29]	PH12
[17]	eMMC-CLK	[17,33]	NRB1	[26,28,31]	PH13
[17]	eMMC-CMD	[17]	NDQ[7..0]	[26,28,31]	PH14
[17]	eMMC-D[7..0]			[26,27,28,31]	PH15
				[25,26,28,29]	PH19

AllWinner Technology Co.,Ltd	
Design Name	T527-STD-AXP717B-LPDDR4-32x1
Size A3	Page Name 13 T527 GPIO PB-H
Rev	V1.0
Date: Tuesday, January 23, 2024	Sheet 13 of 38

GPIO

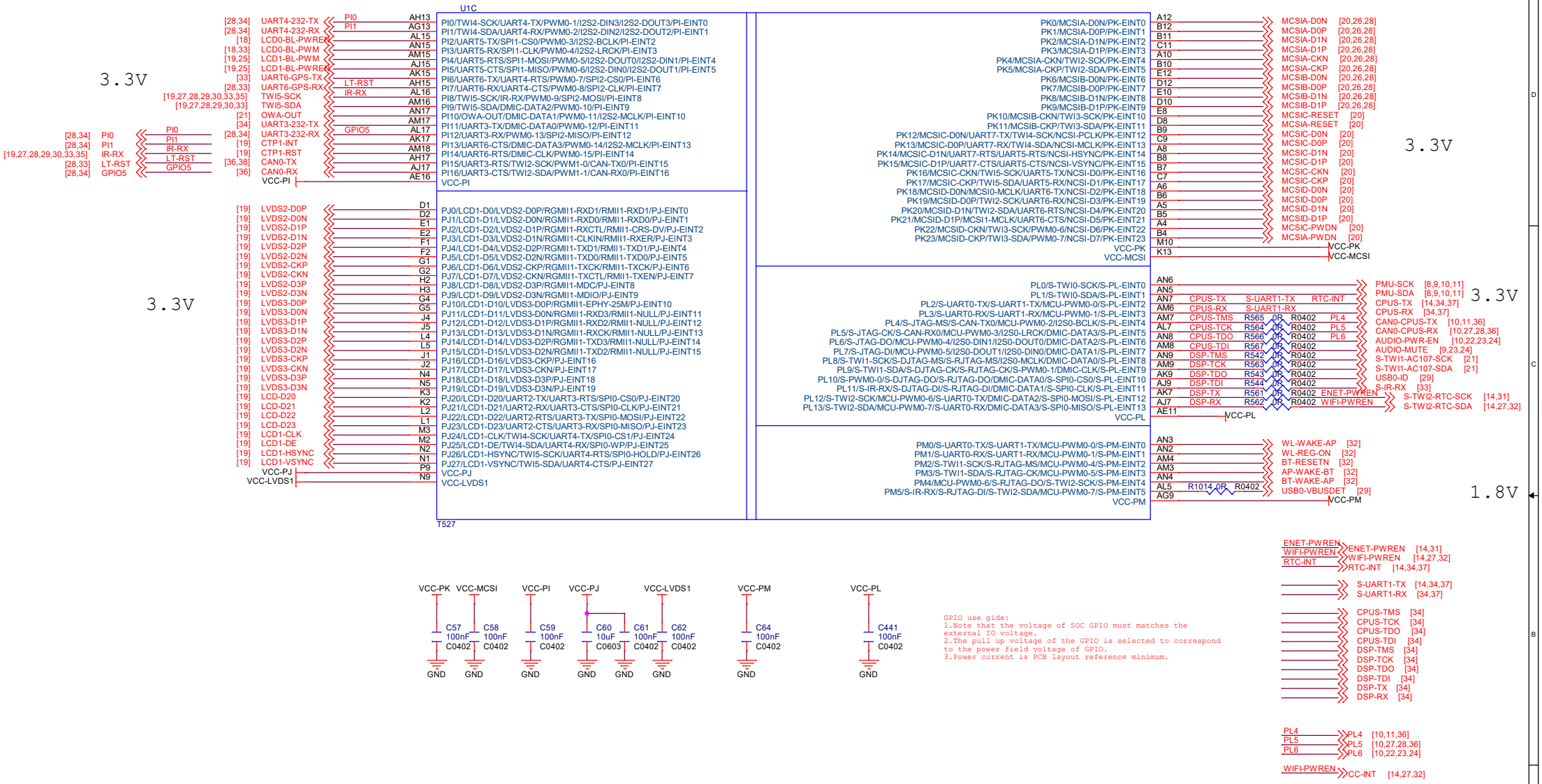

AllWinner Technology Co.,Ltd	
Design Name	T527-STD-AXP717B-LPDDR4-32x1
Size A3	Page Name 14 T527 GPIO PI-M
Rev	V1.0
Date: Tuesday, January 23, 2024	Sheet 14 of 38

Audio&ADC

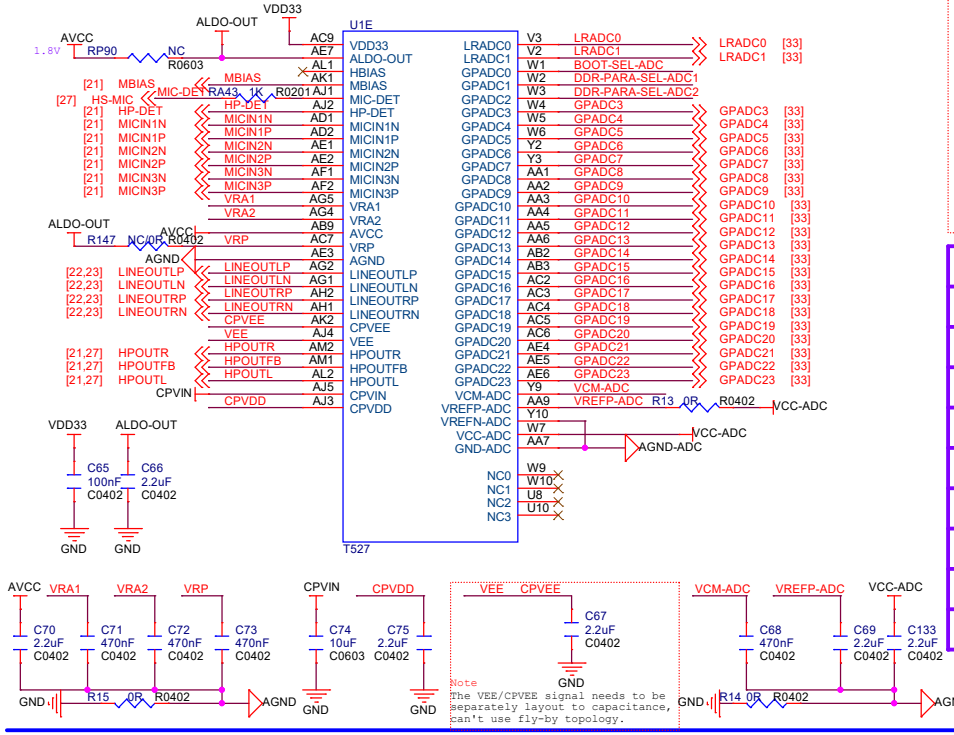

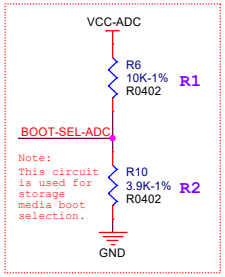

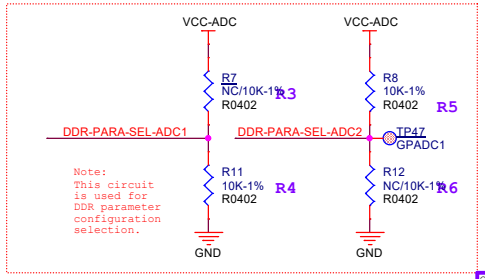

NO.	R1	R2	Boot Select type
1	NC	10K	SMHC0->MLC NAND->SLC NAND->try(except SPI in PJ)
2	10K	1K	SMHC0->SLC NAND->MLC NAND->try(except SPI in PJ)
3	10K	2K2	SMHC0->EMMC_USER->EMMC_BOOT->try(except SPI in PJ)
4	10K	3K9	SMHC0->EMMC_BOOT->EMMC_USER->try(except SPI in PJ)
5	6K8	4K7	SMHC0->SPI NOR->try(except SPI in PJ)
6	6K8	6K8	SMHC0->SPI NAND->try(except SPI in PJ)
7	4K3	6K8	SMHC0->SPI NOR in PJ->try
8	2K2	10K	SMHC0->SPI NAND in PJ->try
9	10K	NC	Reserved

try default order:(selected fail media will not try)
EMMC_USER->EMMC_BOOT->SLC NAND->MLC NAND->SPI NOR->SPI NAND

GPADC1 Level(Set by the R3 pull-up and R4 pull-down resistance	GPADC2 Voltage(Fixed pull-up R5 is 10K-1%,Set the voltage by adjusting pull-down resistor R6)	DDR PARA
0mV	163mV(1K-1%)	DDR PARA 1
0mV	382mV(2.7K-1%)	DDR PARA 2
0mV	608mV(5.1K-1%)	DDR PARA 3
0mV	811mV(8.2K-1%)	DDR PARA 4
0mV	1050mV(14K-1%)	DDR PARA 5
0mV	1315mV(27K-1%)	DDR PARA 6
0mV	1569mV(68K-1%)	DDR PARA 7
0mV	1800mV(NC)	DDR PARA 8
1800mV	163mV(1K-1%)	DDR PARA 9
1800mV	382mV(2.7K-1%)	DDR PARA 10
1800mV	608mV(5.1K-1%)	DDR PARA 11
1800mV	811mV(8.2K-1%)	DDR PARA 12
1800mV	1050mV(14K-1%)	DDR PARA 13
1800mV	1315mV(27K-1%)	DDR PARA 14
1800mV	1569mV(68K-1%)	DDR PARA 15
1800mV	1800mV(NC)	DDR PARA 16

USB&EDP&PCIE

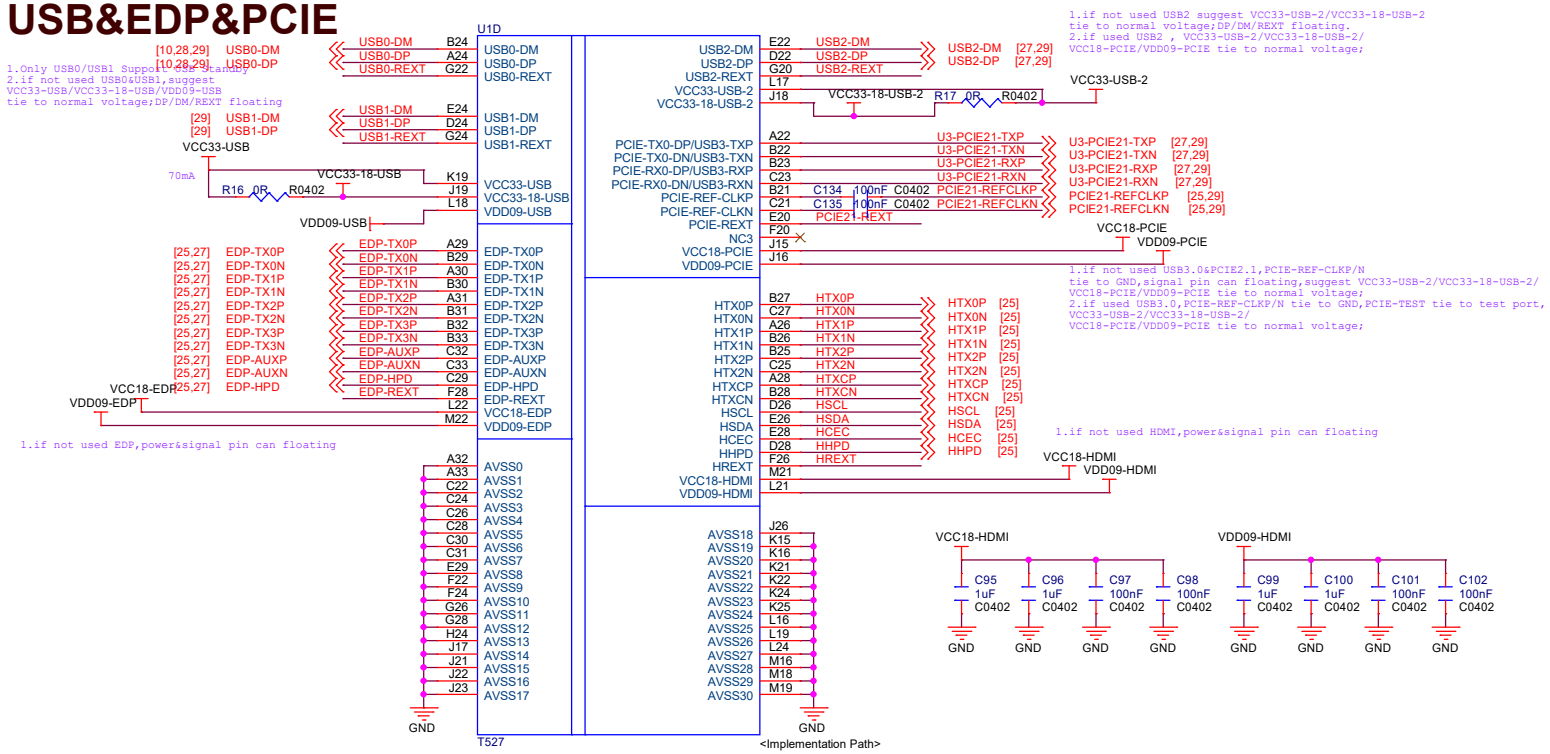

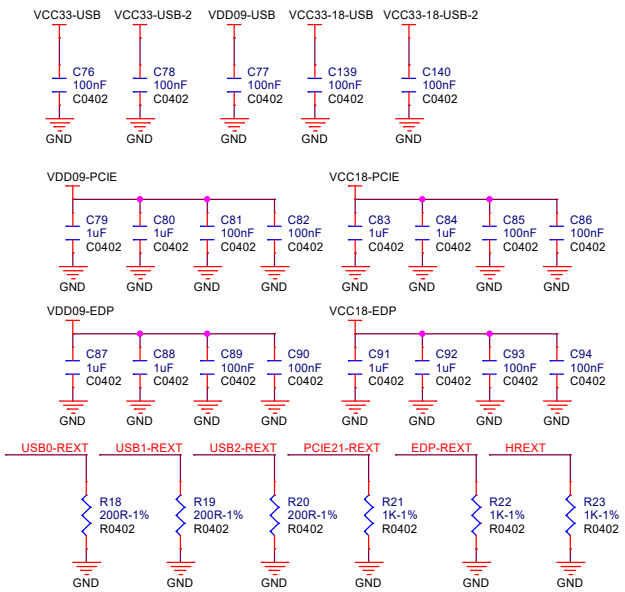

1.Only USB0/USB1 Support OTG Function
2.if not used USB0&USB1,suggest VCC33-USB/VCC33-18-USB/VDD09-USB tie to normal voltage;DP/DM/REXT floating

1.if not used USB2 suggest VCC33-USB-2/VCC33-18-USB-2 tie to normal voltage;DP/DM/REXT floating.
2.if used USB2 , VCC33-USB-2/VCC33-18-USB-2/ VCC18-PCIE/VDD09-PCIE tie to normal voltage;

1.if not used USB3.0&PCIE2.1,PCIE-REF-CLKP/N tie to GND,signal pin can floating,suggest VCC33-USB-2/VCC33-18-USB-2/ VCC18-PCIE/VDD09-PCIE tie to normal voltage;
2.if used USB3.0,PCIE-REF-CLKP/N tie to GND,PCIE-TEST tie to test port, VCC33-USB-2/VCC33-18-USB-2/ VCC18-PCIE/VDD09-PCIE tie to normal voltage;

1.if not used HDMI,power&signal pin can floating

1.if not used EDP,power&signal pin can floating

AllWinner Technology Co.,Ltd	
Design Name: T527-STD-AXP717B-LPDDR4-32x1	
Size: A3	Page Name: 15 T527 Analog&High-speed
Rev: V1.0	
Date: Tuesday, January 23, 2024	Sheet 15 of 38

LPDDR4

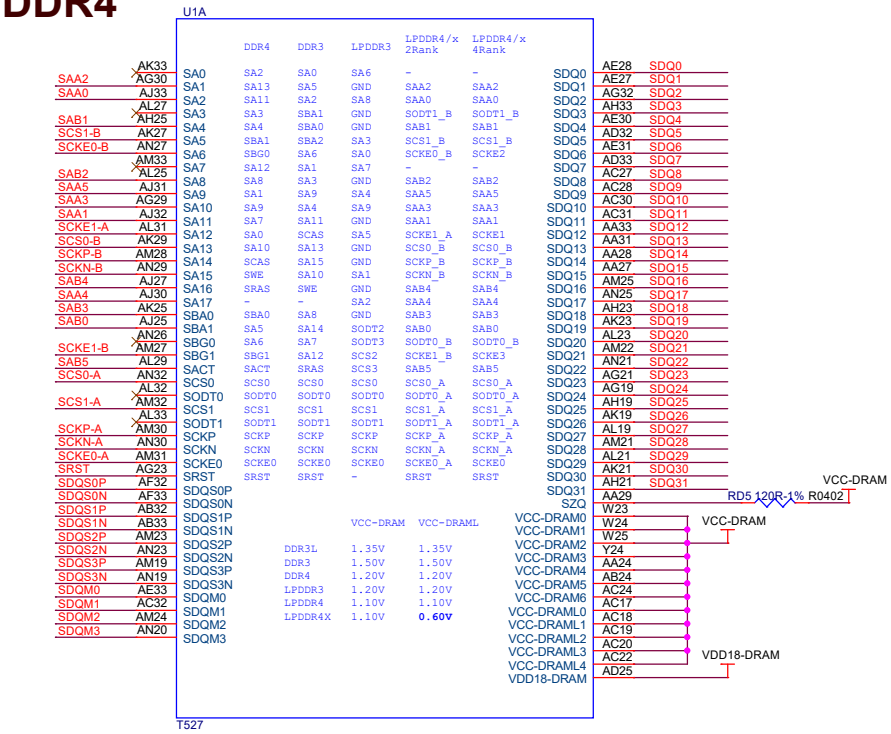

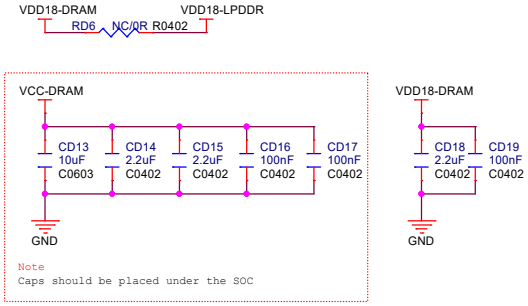

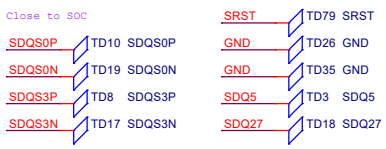

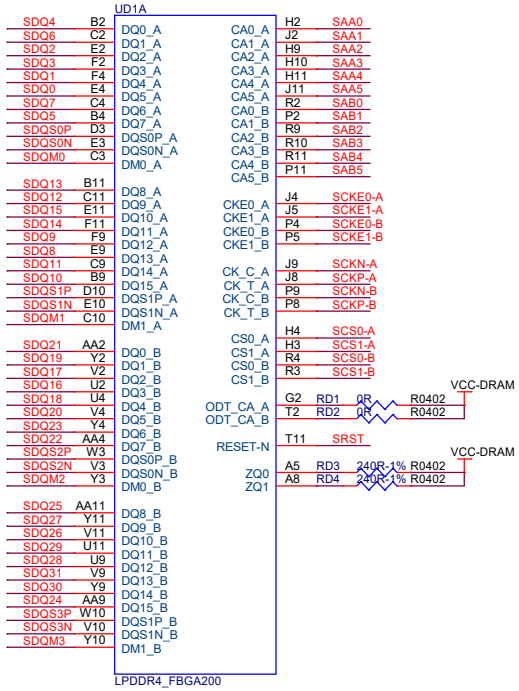

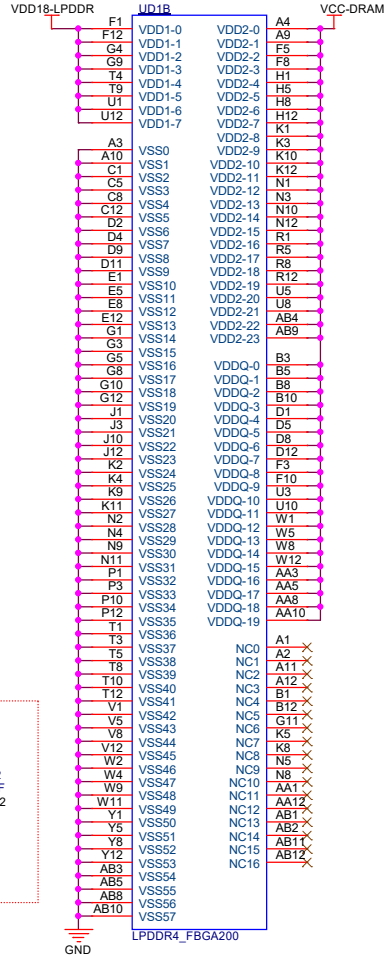

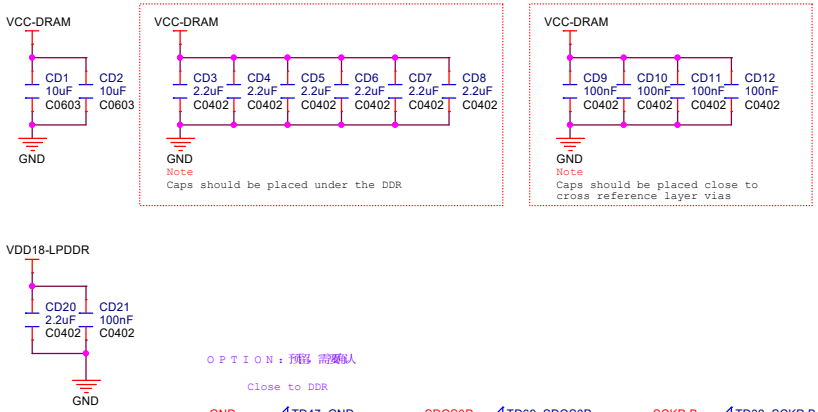

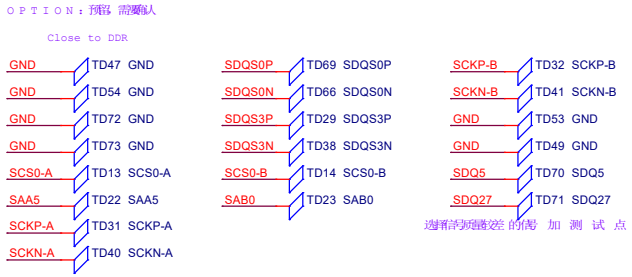

AllWinner Technology Co.,Ltd			
Design Name	T527-STD-AXP717B-LPDDR4-32x1		
Size A3	Page Name 16 T527 DDR		Rev V1.0
Date: Tuesday, January 23, 2024	Sheet 16 of 38		

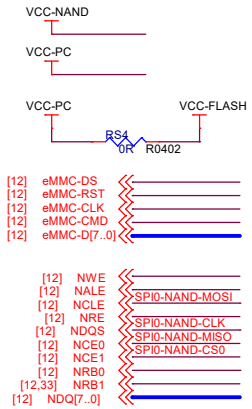

NAND

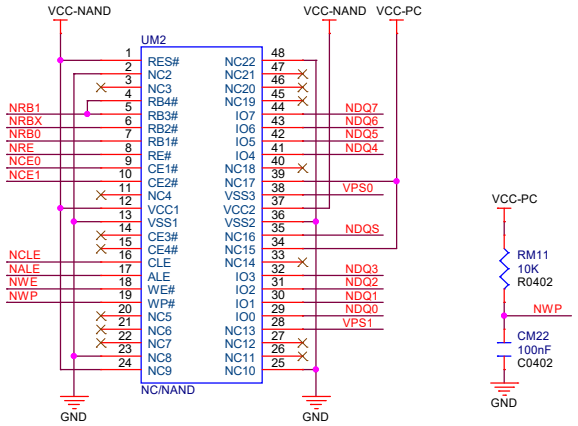

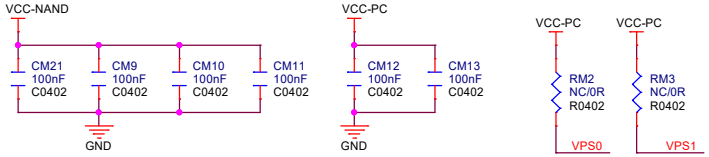

SPI NAND

Compatible with SPI Nor

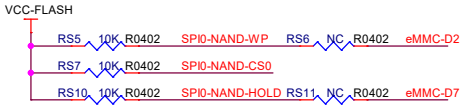

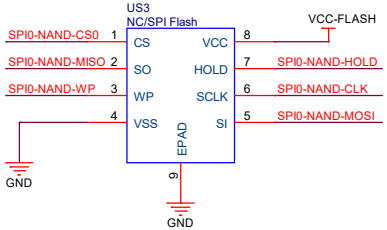

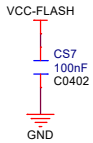

EMMC

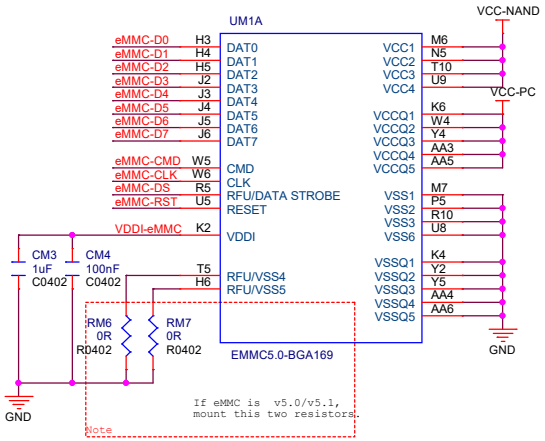

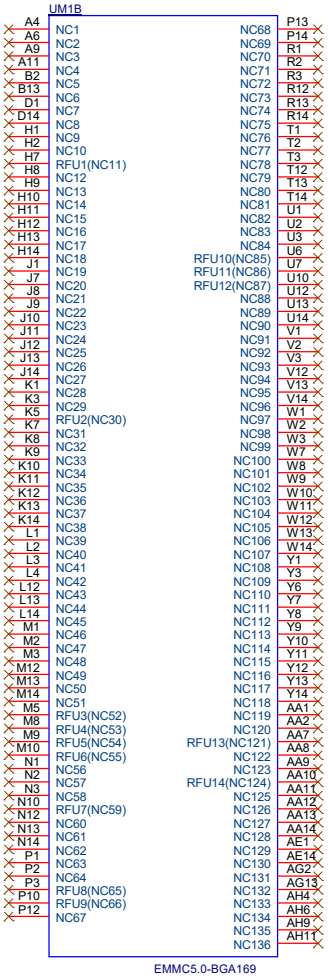

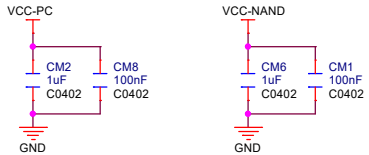

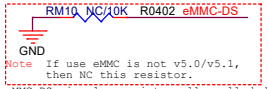

eMMC-DS signals are internally pulled down in the SOC

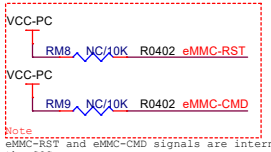

eMMC-RST and eMMC-CMD signals are internally pulled up in the SOC,

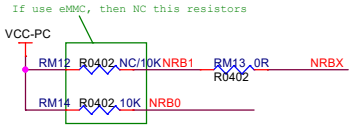

AllWinner Technology Co.,Ltd			
Design Name	T527-STD-AXP717B-LPDDR4-32x1		
Size A3	Page Name 17 EMMC/NAND		Rev V1.0
Date: Tuesday, January 23, 2024	Sheet 17 of 38		

LCD0 FPC CON

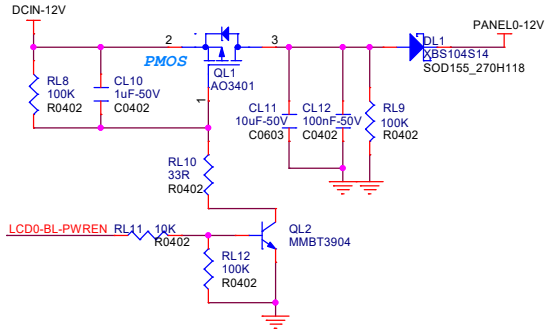

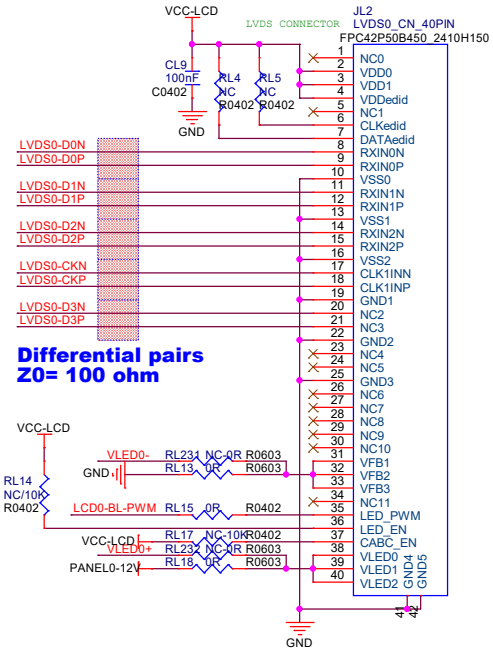

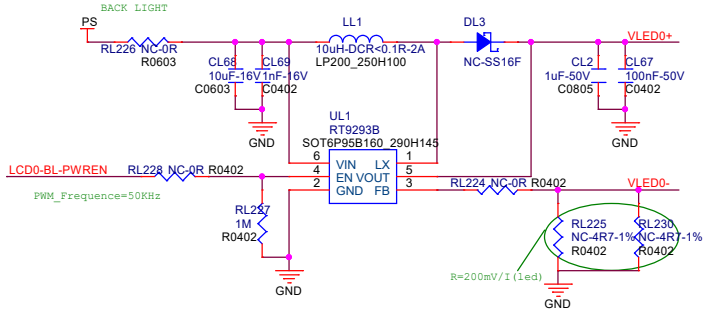

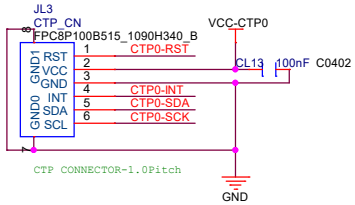

BTB CON For MIPI DSI/dual LVDS

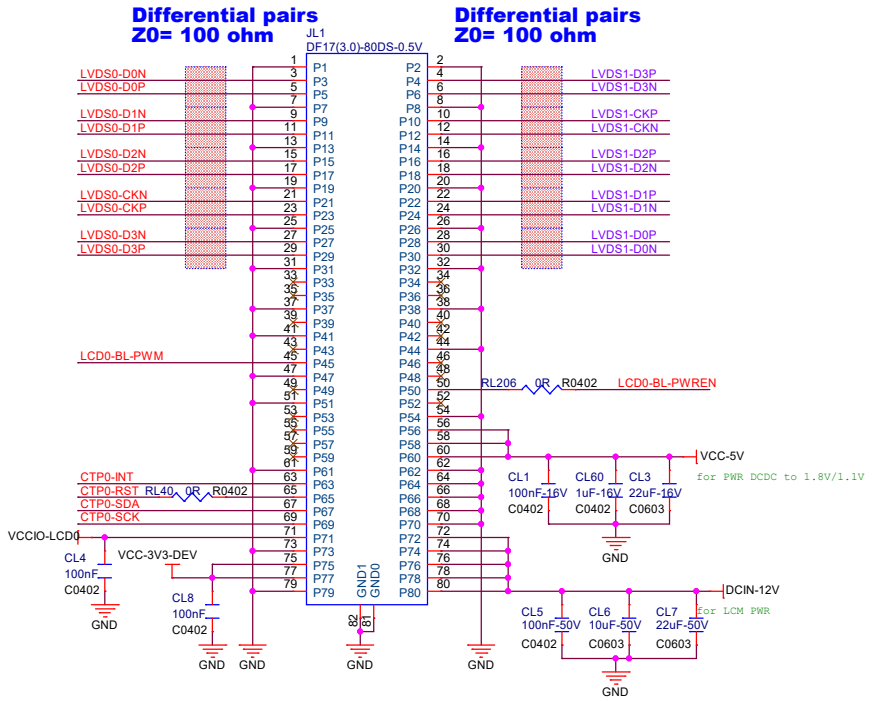

Note: It is recommended that the PCB trace length of MIPI DSI is less than 2000mil

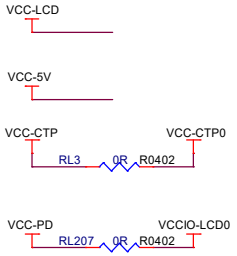

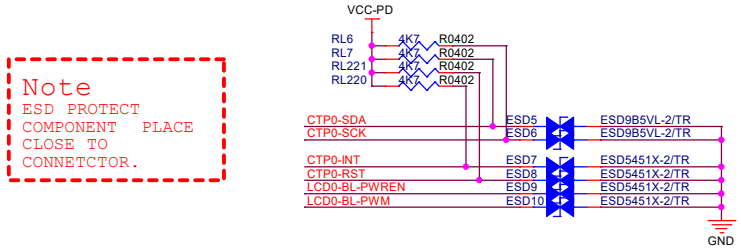

Note
ESD PROTECT COMPONENT PLACE CLOSE TO CONNETCTOR.

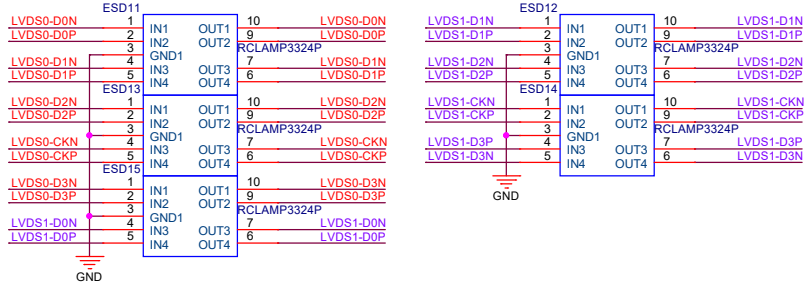

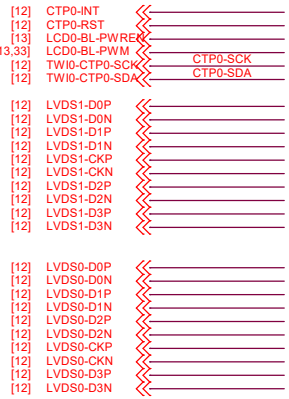

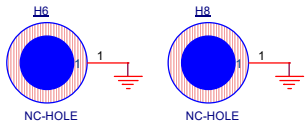

AllWinner Technology Co.,Ltd		
Design Name: T527-STD-AXP717B-LPDDR4-32x1		
Size: A3	Page Name: 18 LCD0	Rev: V1.0
Date: Tuesday, January 23, 2024	Sheet 18 of 38	

LCD FPC CON

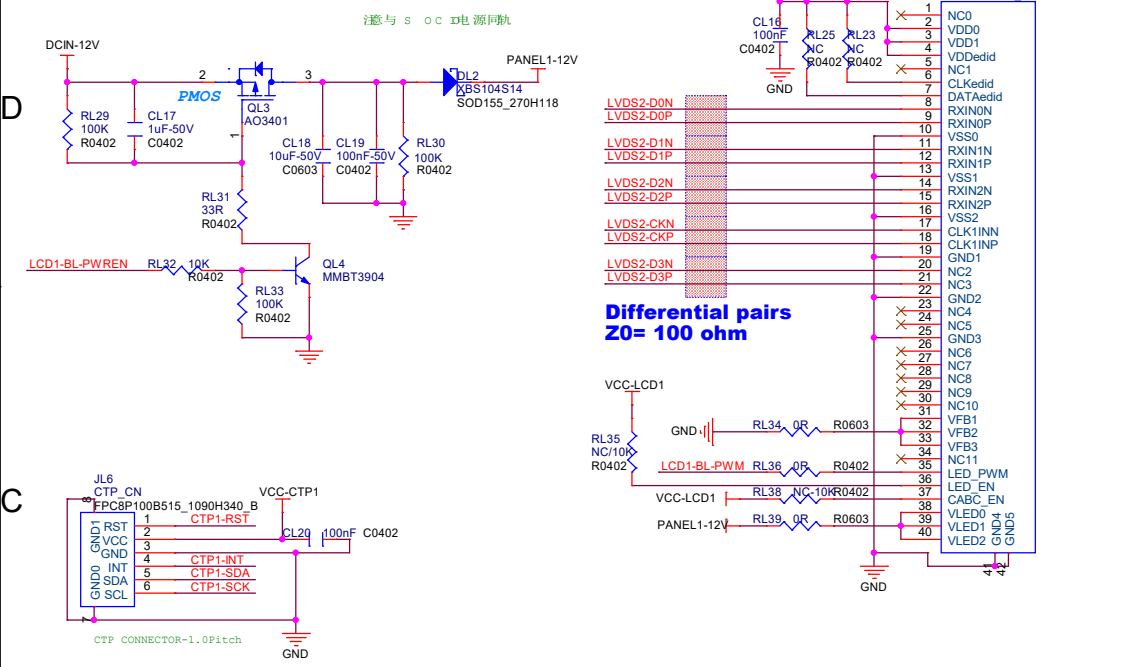

BTB CON For SerDes/Dual LVDS/RGB LCD

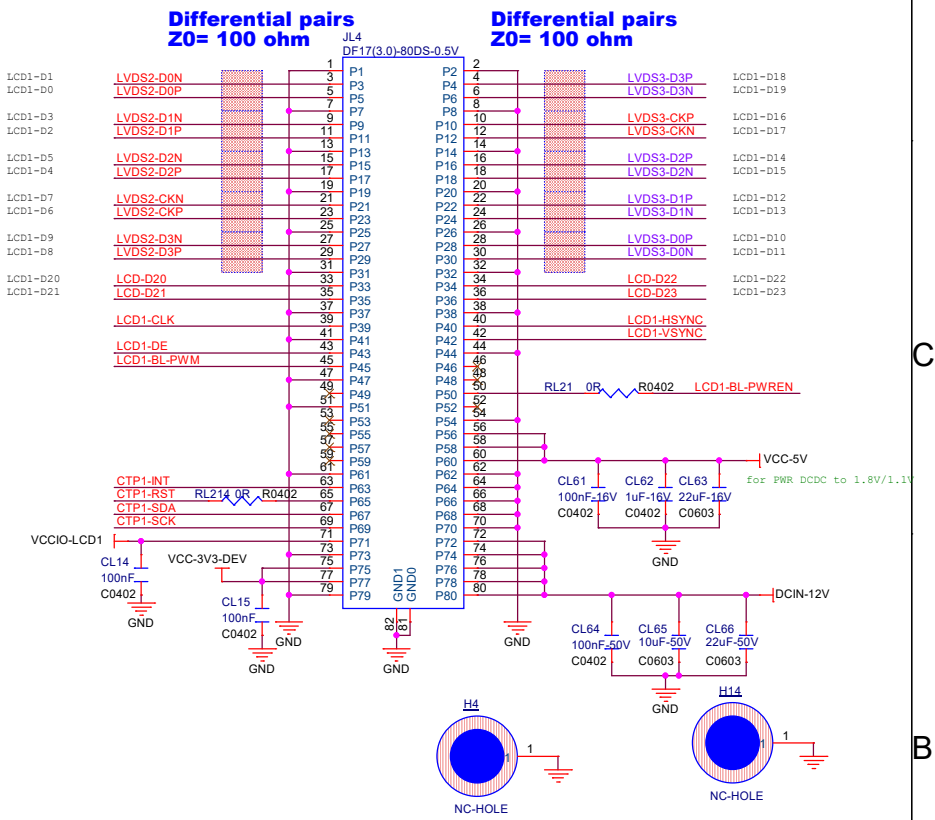

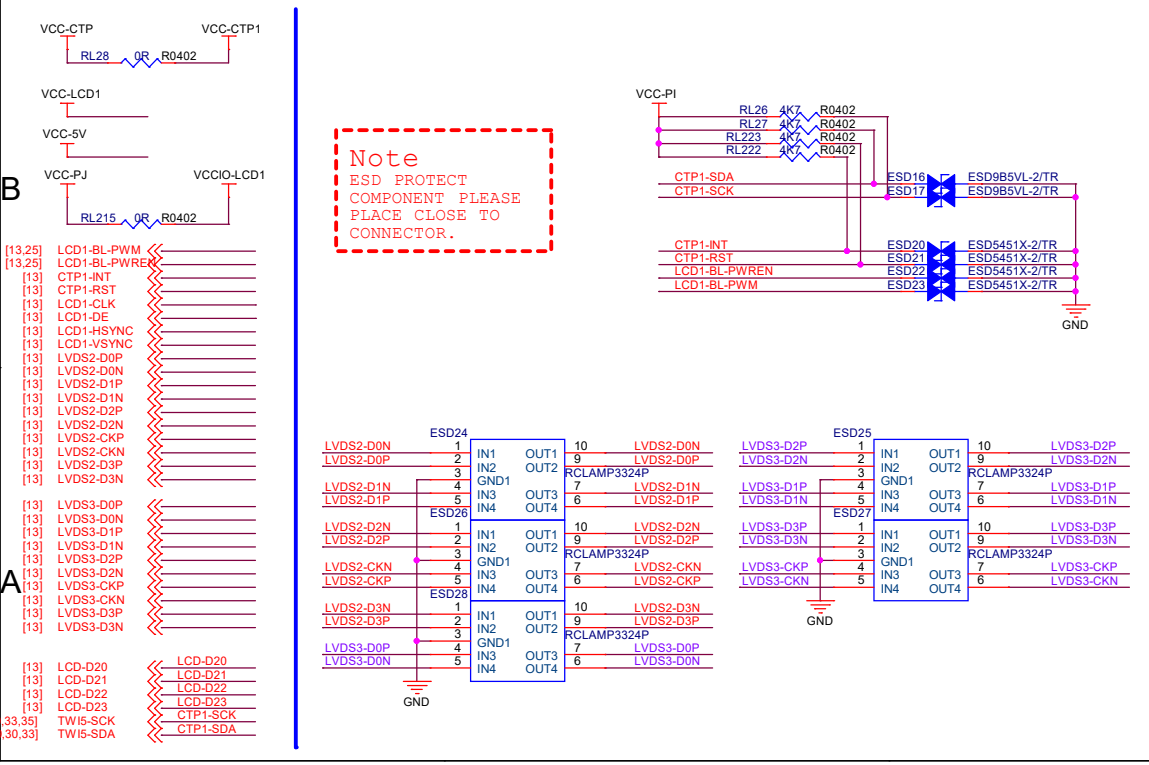

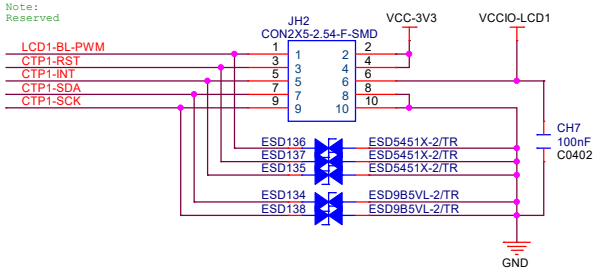

AllWinner Technology Co.,Ltd		
Design Name: T527-STD-AXP717B-LPDDR4-32x1		
Size: A3	Page Name: 19 LCD1	Rev: V1.0
Date: Tuesday, January 23, 2024	Sheet 19 of 38	

BTB CON For CAM SerDes

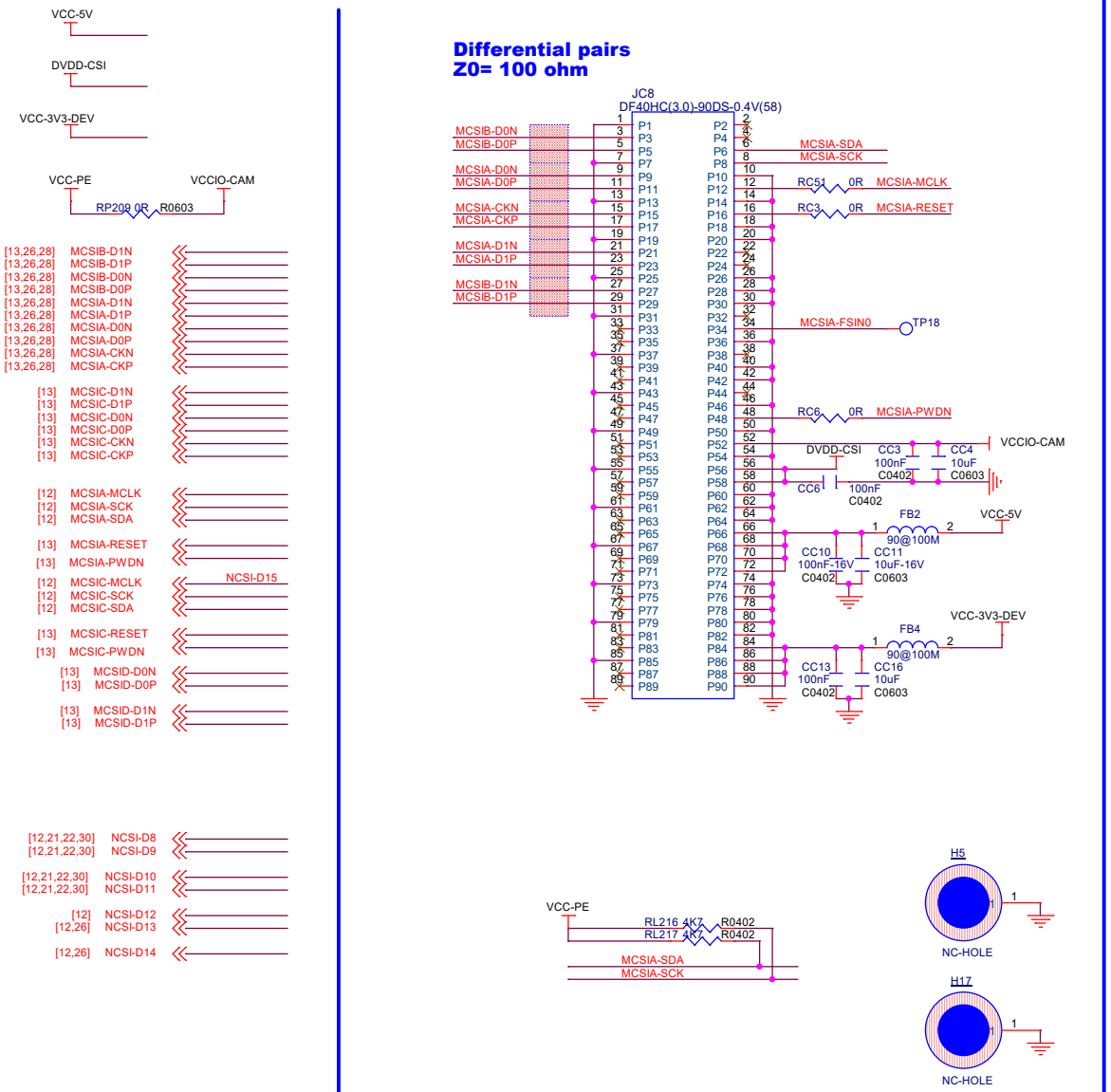

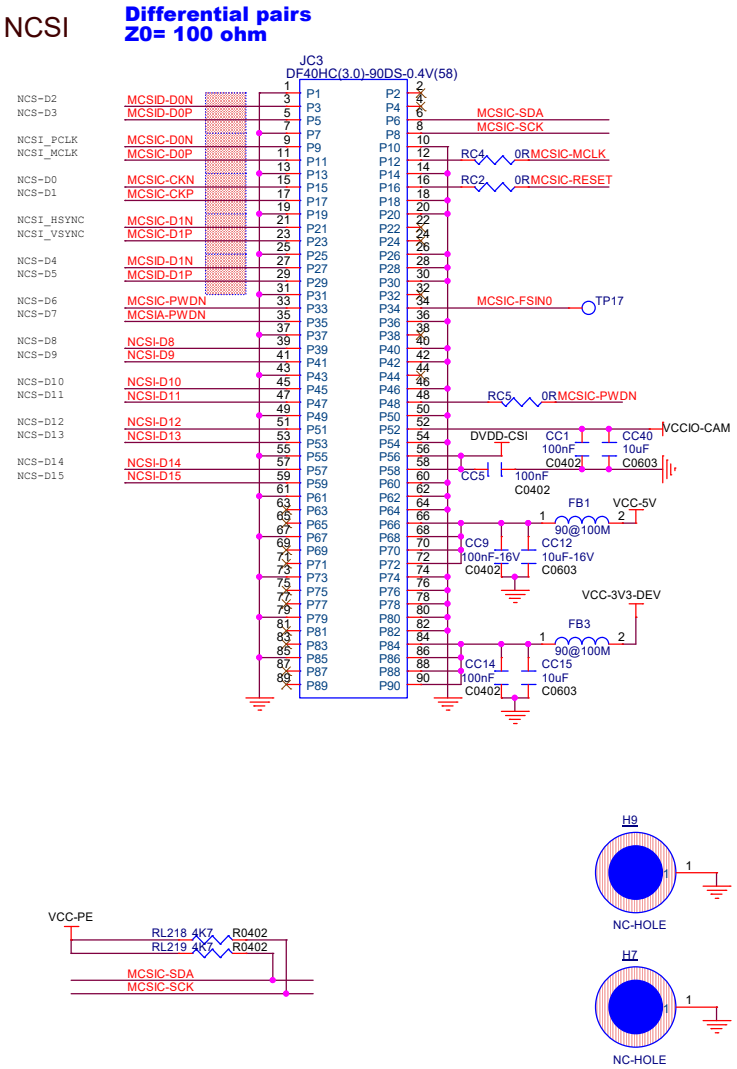

AllWinner Technology Co.,Ltd		
Design Name: T527-STD-AXP717B-LPDDR4-32x1		
Size: A3	Page Name: 20 CAM	Rev: V1.0
Date: Tuesday, January 23, 2024	Sheet 20 of 38	

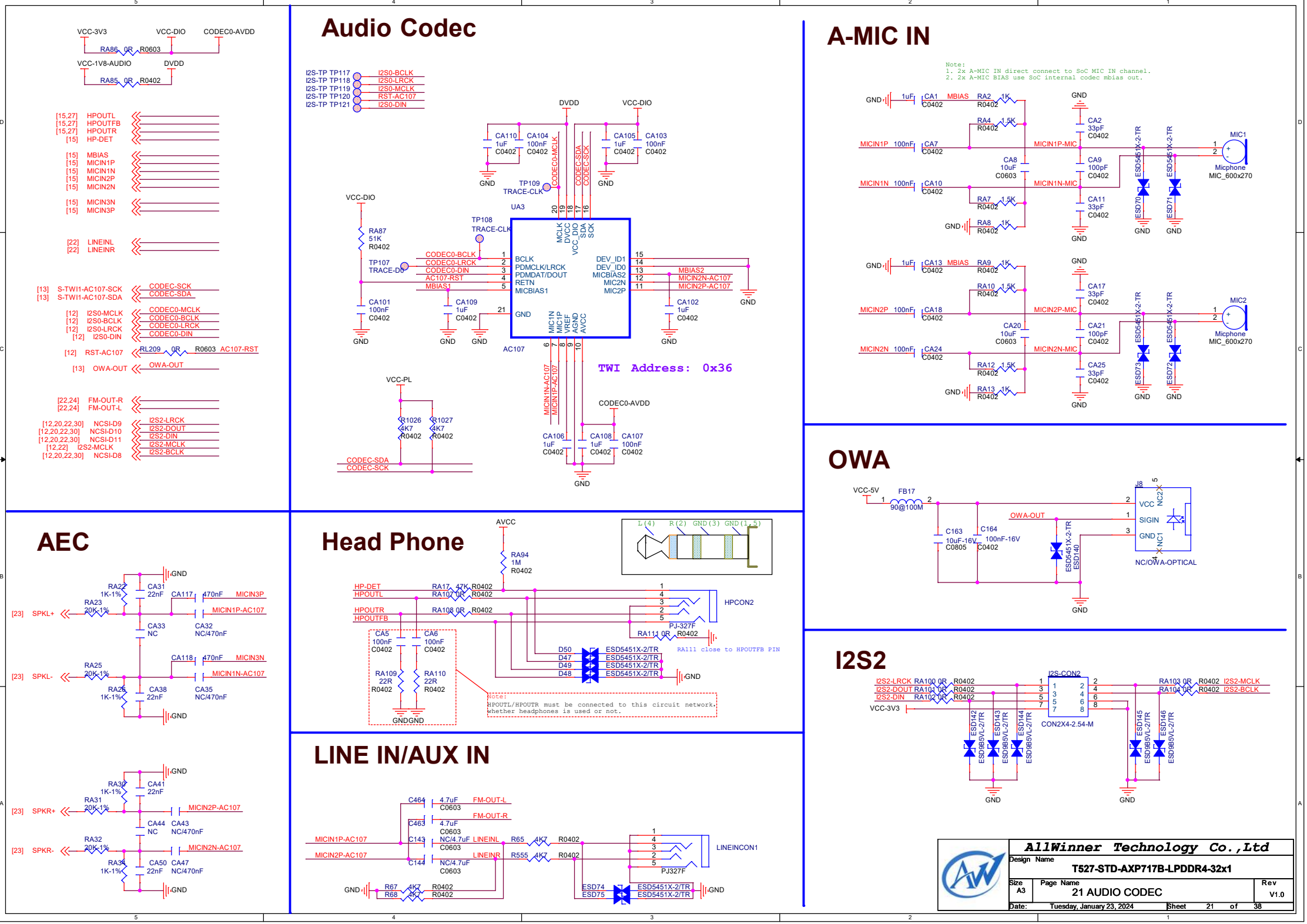
Audio Codec
A-MIC IN
OWA
AEC
Head Phone
I2S2
LINE IN/AUX IN
TWI Address: 0x36
AllWinner Technology Co.,Ltd
Design Name
T527-STD-AXP717B-LPDDR4-32x1
Size A3
Page Name
21 AUDIO CODEC
Rev V1.0
Date: Tuesday, January 23, 2024
Sheet 21 of 38

DSP

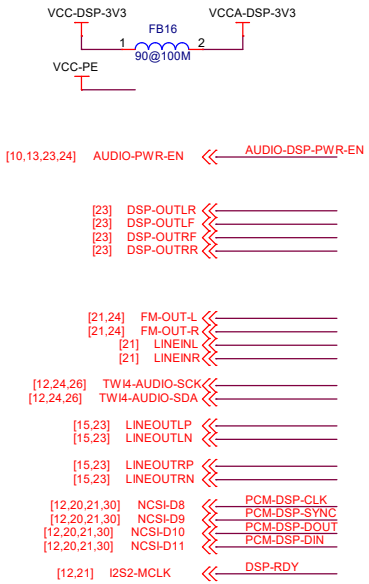

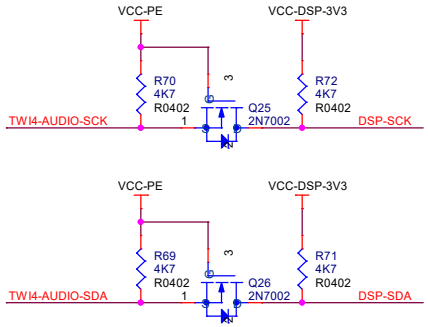

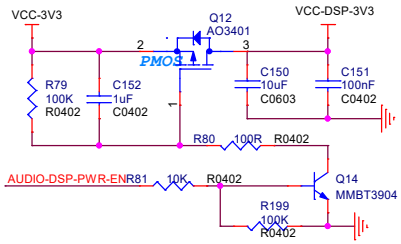

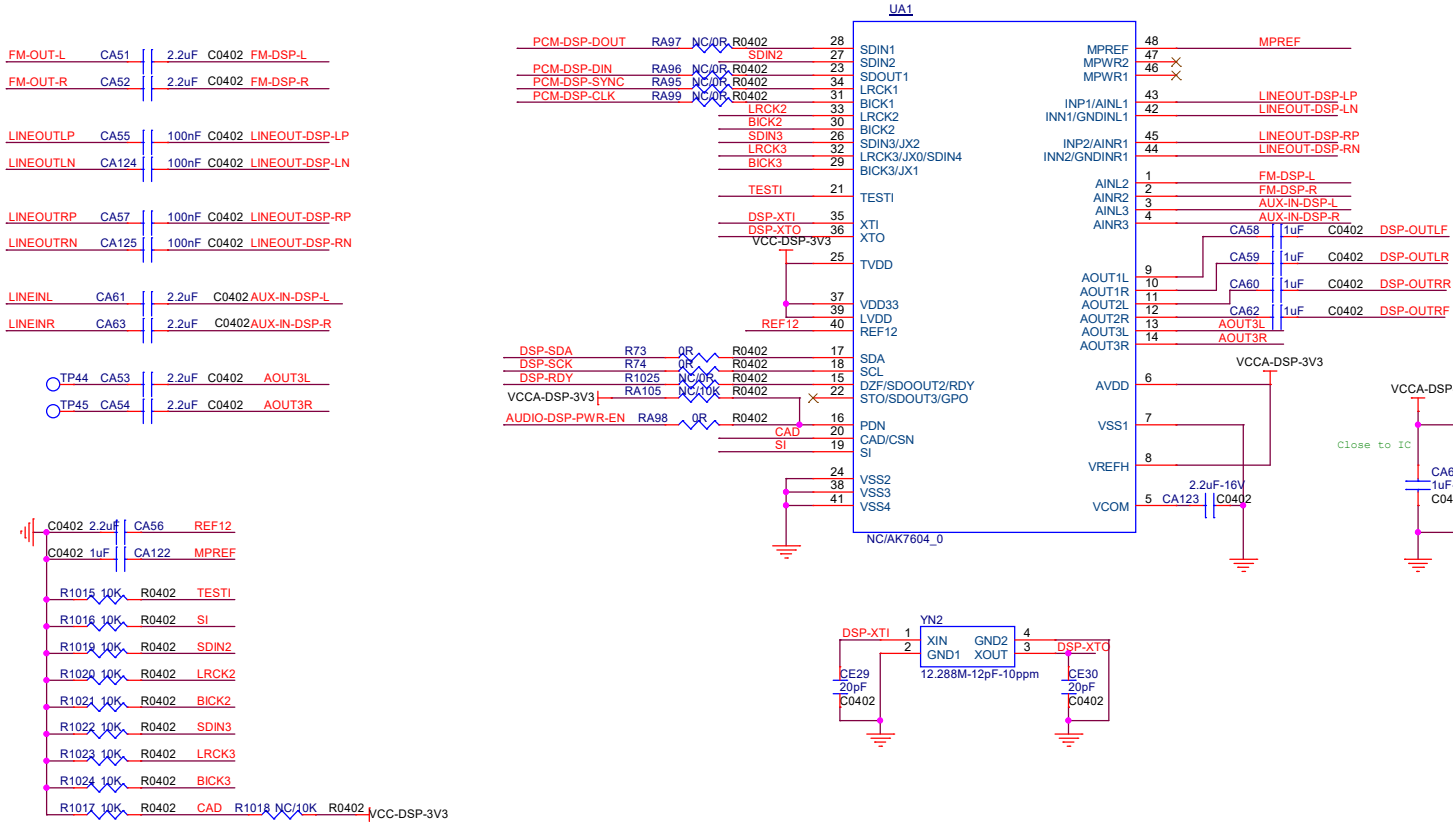

AllWinner Technology Co.,Ltd		
Design Name: T527-STD-AXP717B-LPDDR4-32x1		
Size: A3	Page Name: 22 Audio DSP/Audio OUT	Rev: V1.0
Date: Tuesday, January 23, 2024	Sheet 22 of 38	

Audio AMP

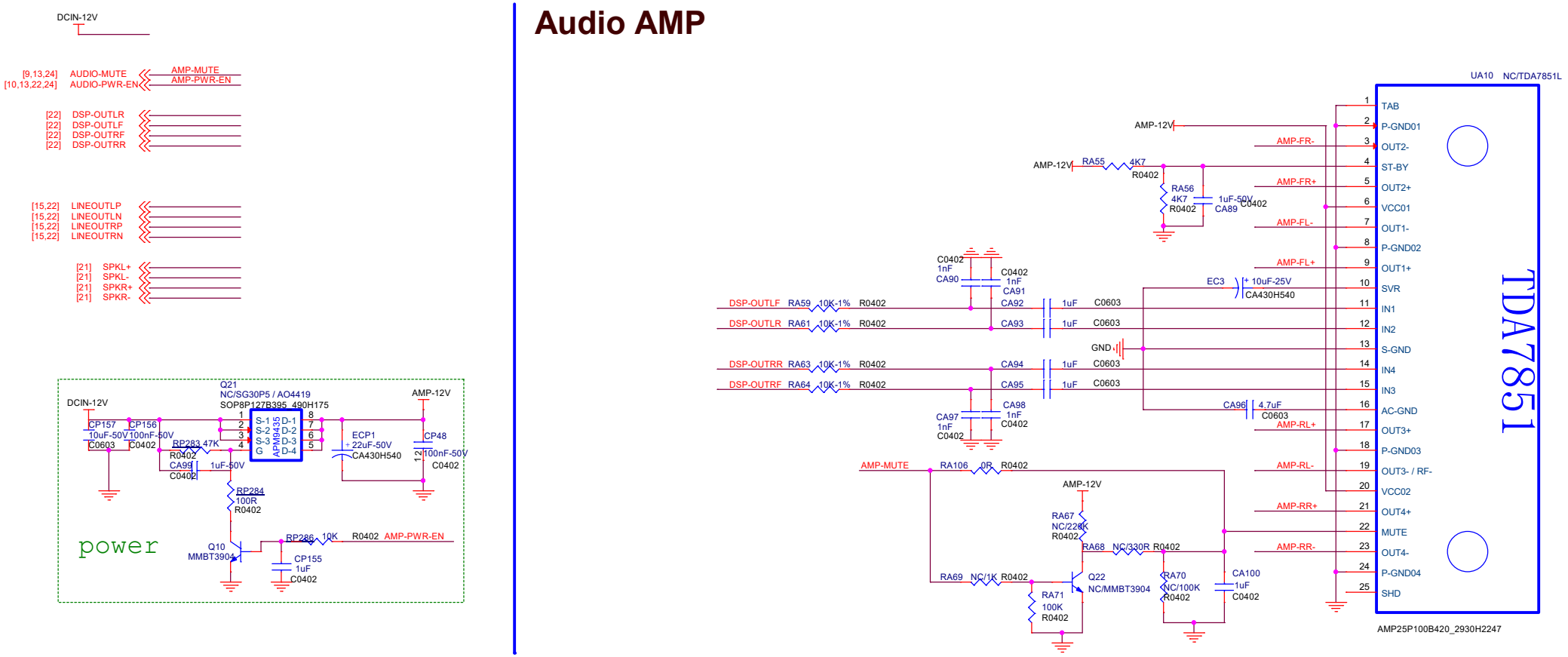

Audio AMP

Reserved for Debug

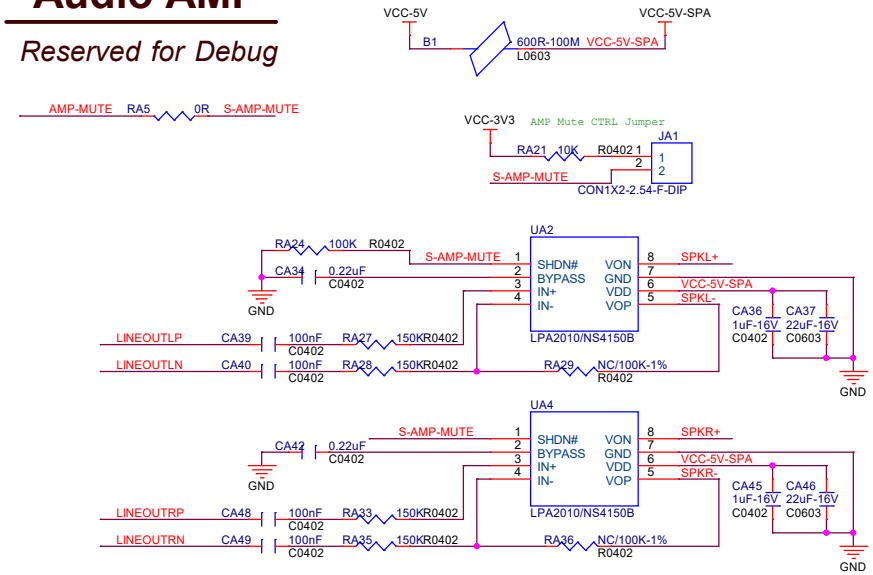

AudioOUT CON

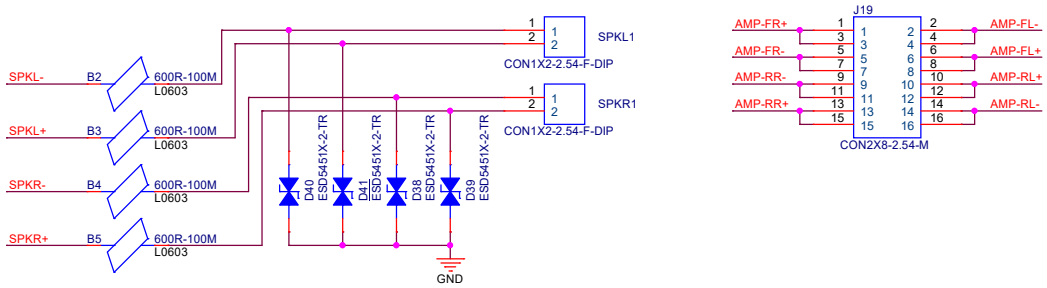

AllWinner Technology Co.,Ltd		
Design Name: T527-STD-AXP717B-LPDDR4-32x1		
Size: A3	Page Name: 23 Audio AMP	Rev: V1.0
Date: Tuesday, January 23, 2024	Sheet 23 of 38	

AM/FM Tuner

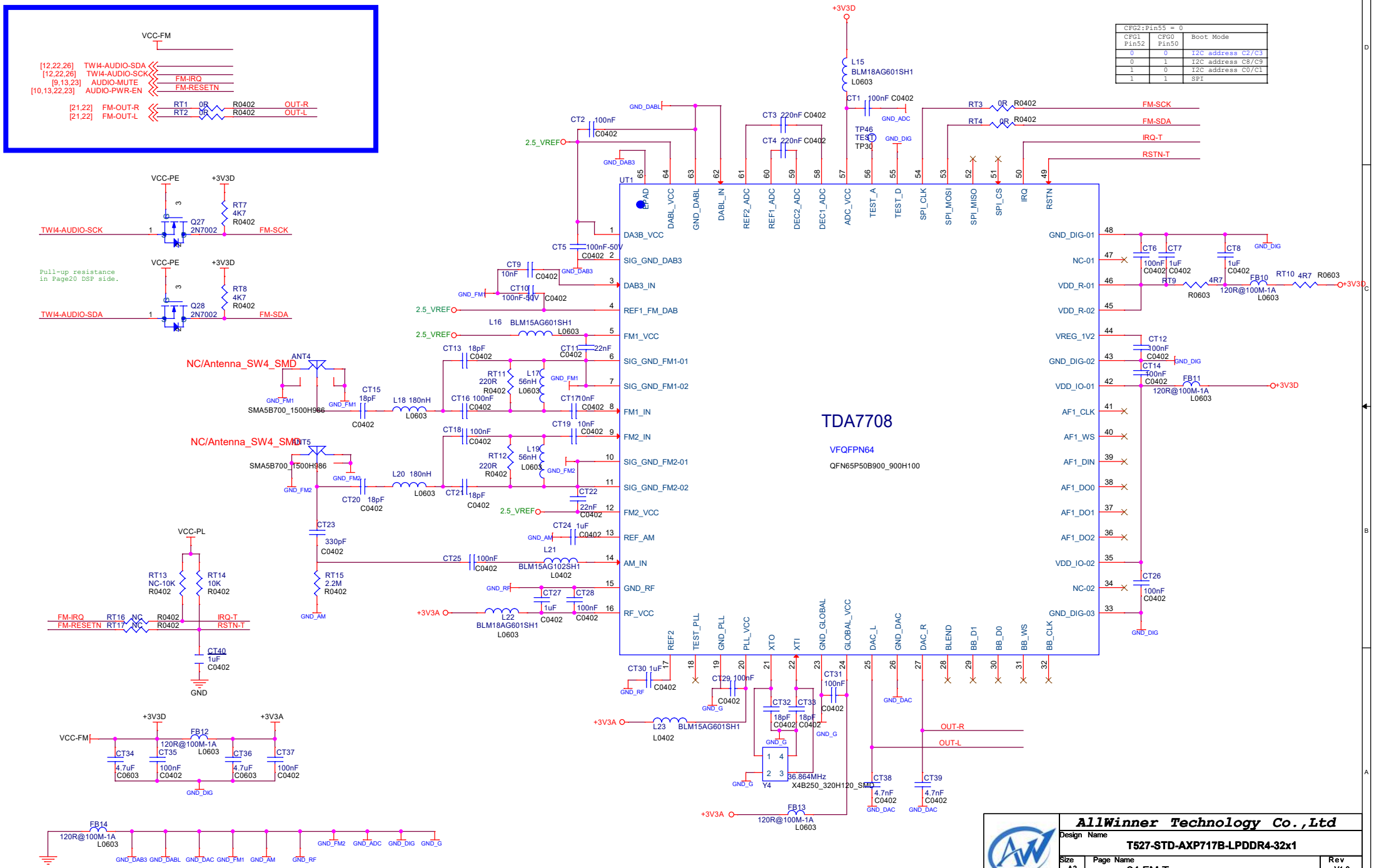

CFG2:Pin55 = 0		
CFG1 Pin52	CFG0 Pin50	Boot Mode
0	0	I2C address C2/C3
0	1	I2C address C8/C9
1	0	I2C address C0/C1
1	1	SPI

AllWinner Technology Co.,Ltd	
Design Name	T527-STD-AXP717B-LPDDR4-32x1
Size A3	Page Name 24 FM Tunner
Rev	V1.0
Date:	Tuesday, January 23, 2024
Sheet	24 of 38

DP

Differential pairs
Z0= 100 ohm

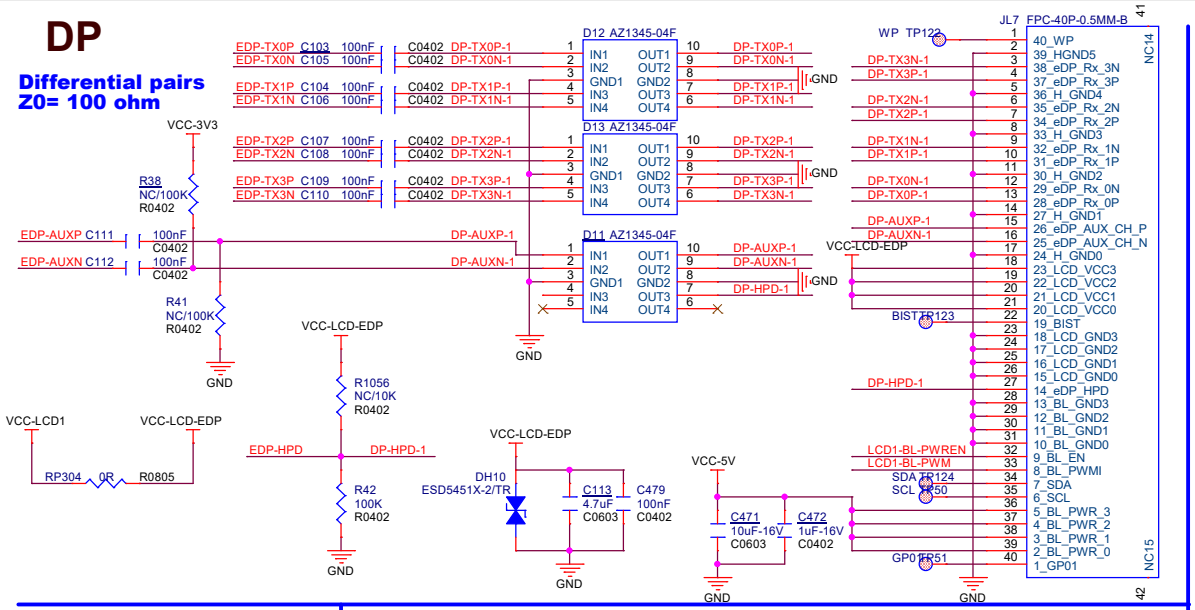

M.2 key B Slot

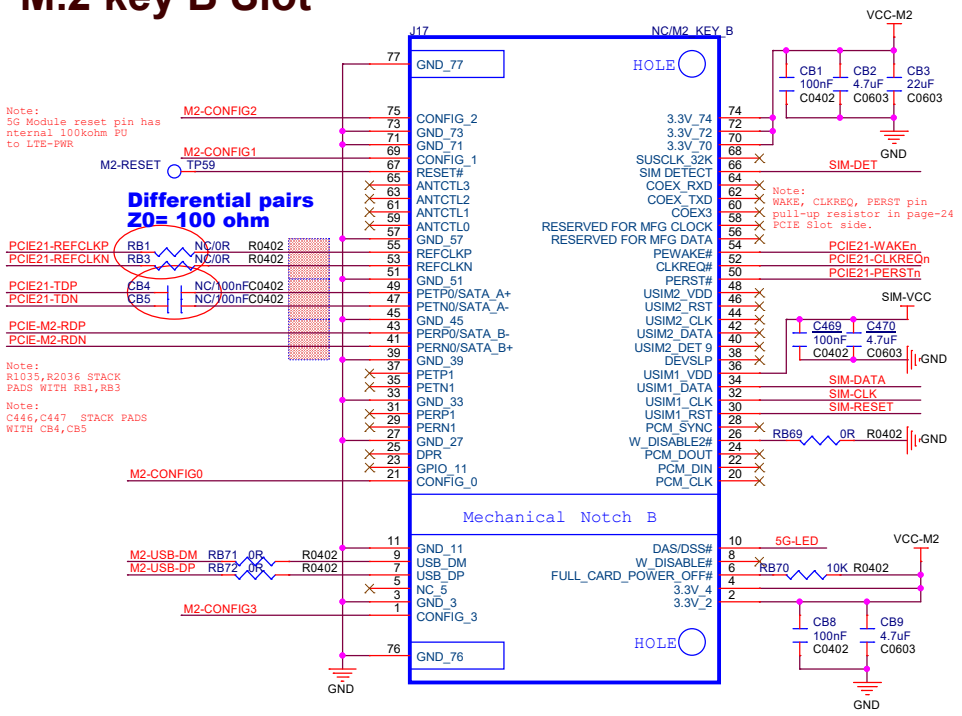

SD CARD

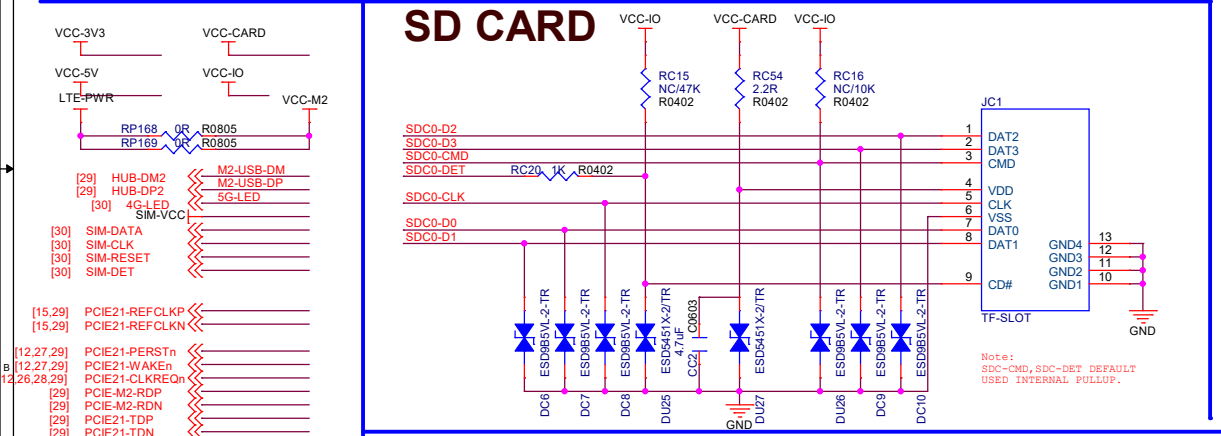

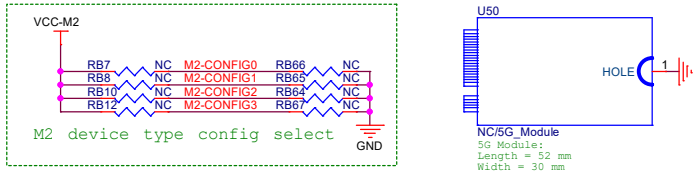

HDMI

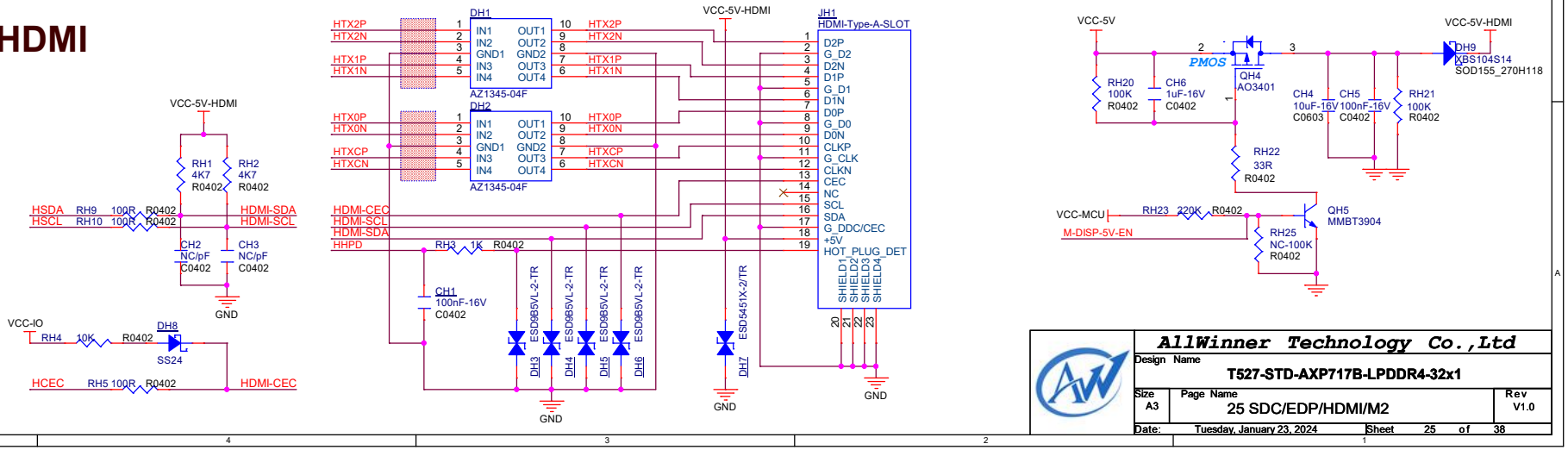

AllWinner Technology Co.,Ltd			
Design Name	T527-STD-AXP717B-LPDDR4-32x1		
Size A3	Page Name 25 SDC/EDP/HDMI/M2		Rev V1.0
Date: Tuesday, January 23, 2024	Sheet 25 of 38		

HDMI IN

MIPI CSI

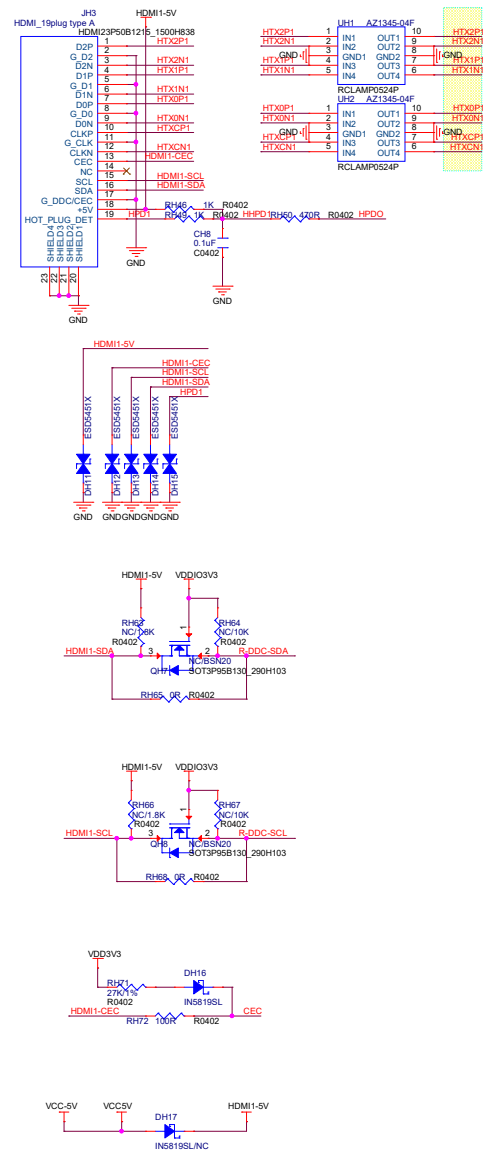

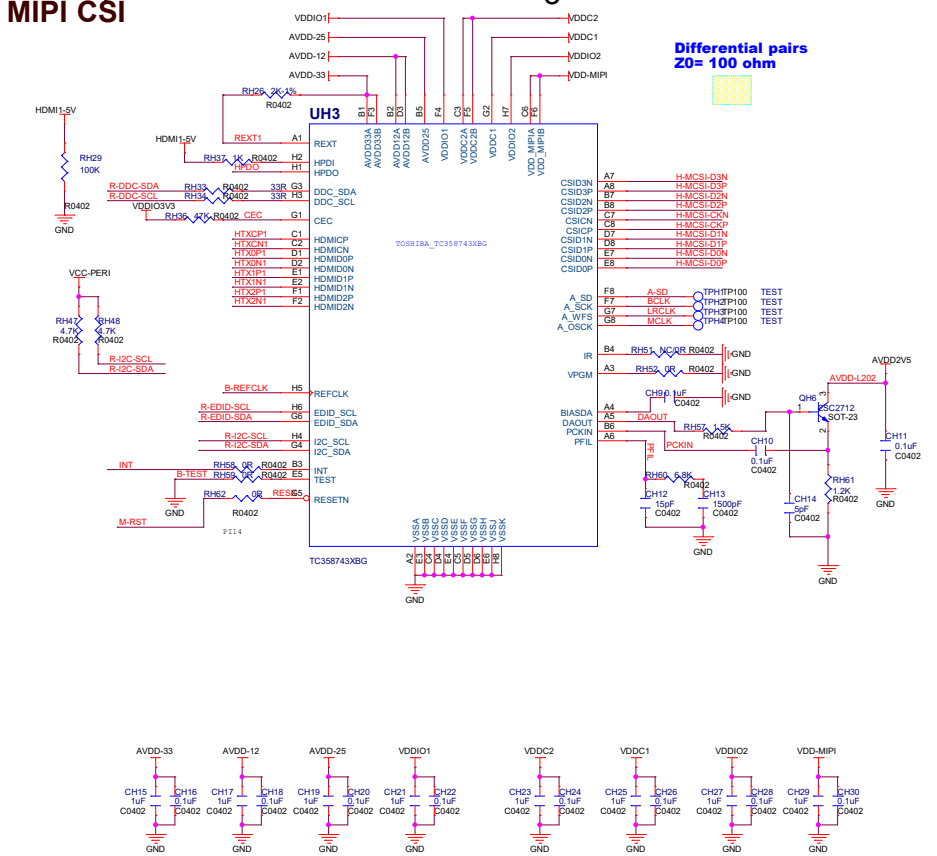

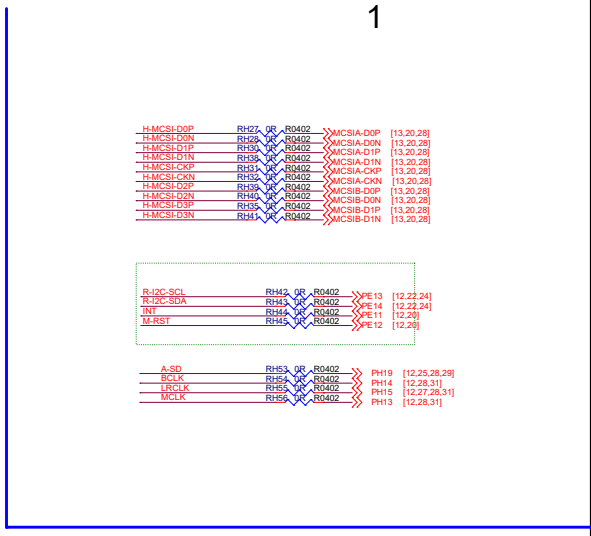

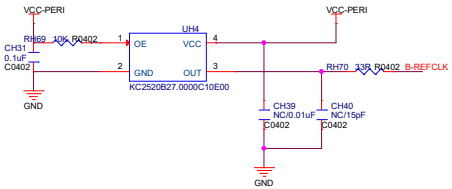

MAIN 2.5V POWER 300mA

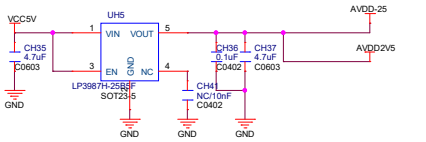

MAIN 1.2V POWER 500mA

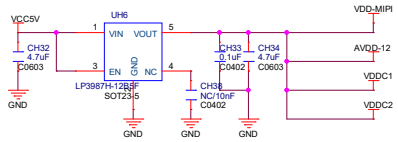

Vout= 3.3V

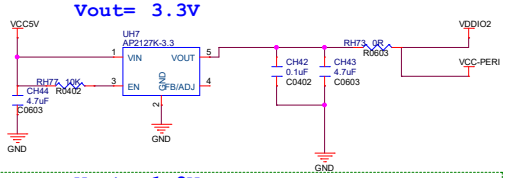

3.3V Iout_min=200mA,max=600mA

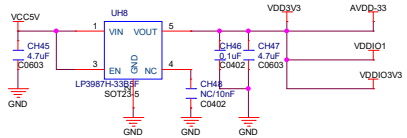

Vout= 1.8V

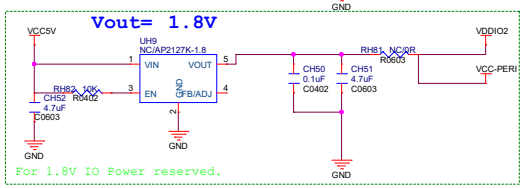

For 1.8V IO Power reserved.

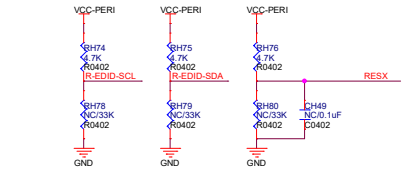

AllWinner Technology Co.,Ltd	
Design Name	T527-STD-AXP717B-LPDDR4-32x1
Size A2 / Page Name	26 HDMI IN
Rev	
Date: Tuesday, January 23, 2024	Sheet 26 of 38

TYPEC-U3/EDP-U2/AUDIO

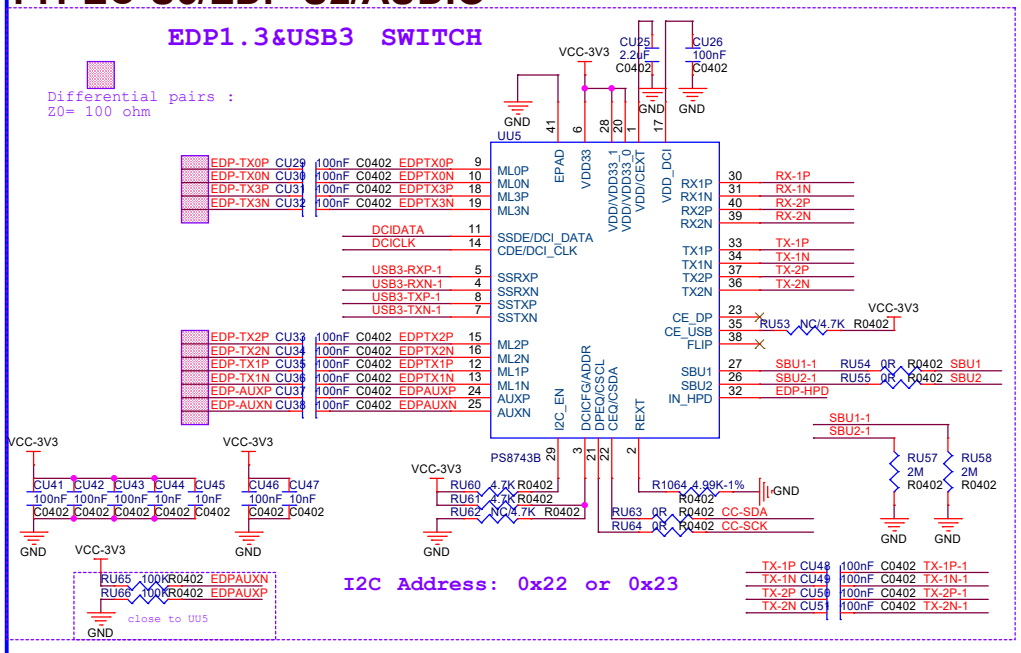

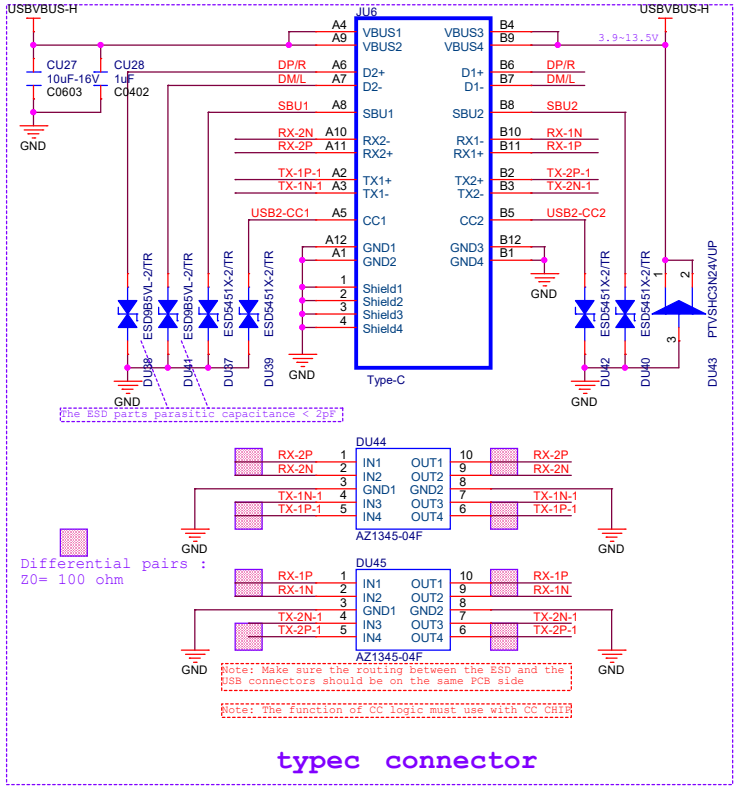

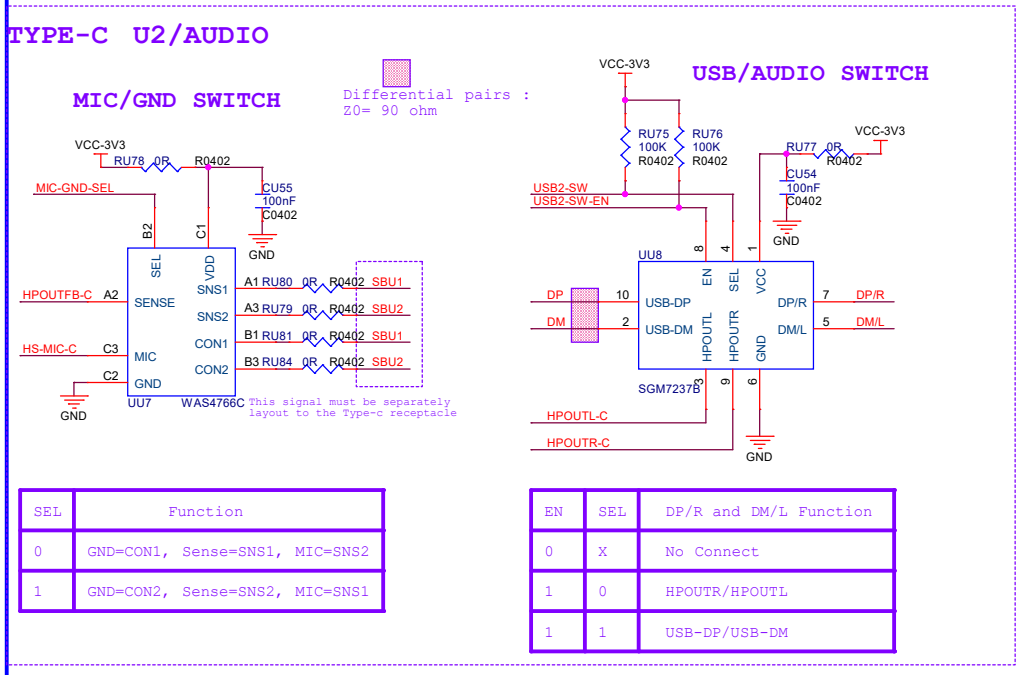

SEL	Function
0	GND=CON1, Sense=SNS1, MIC=SNS2
1	GND=CON2, Sense=SNS2, MIC=SNS1

EN	SEL	DP/R and DM/L Function
0	X	No Connect
1	0	HPOUTR/HPOUTL
1	1	USB-DP/USB-DM

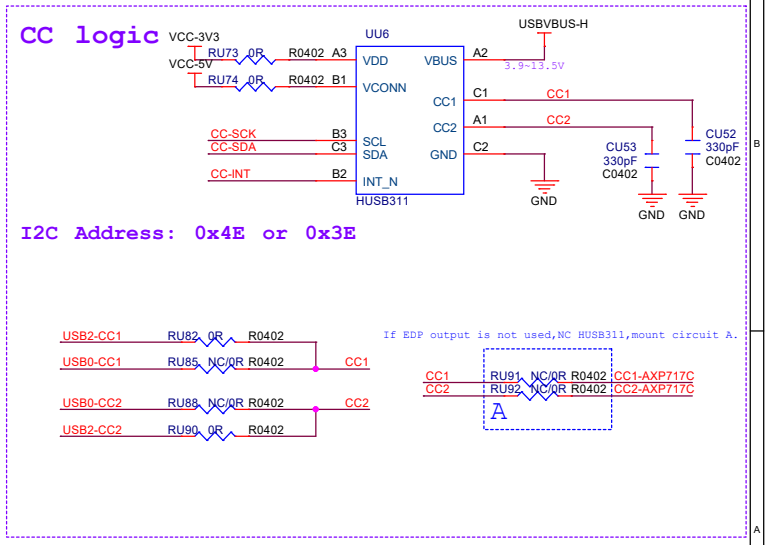

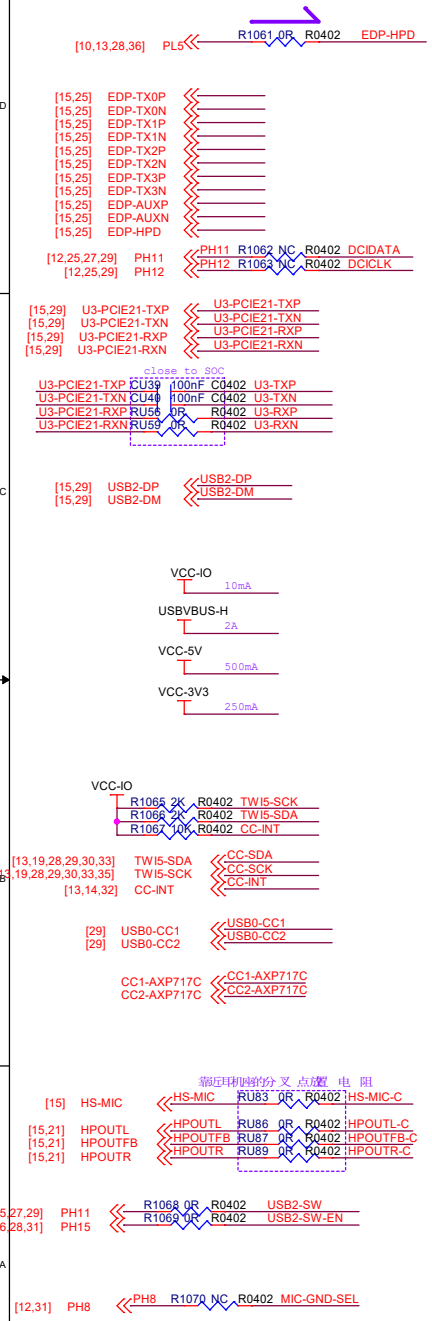

AllWinner Technology Co.,Ltd	
Design Name	T527-STD-AXP717B-LPDDR4-32x1
Size A3	Page Name 27 TYPEC DP OUT/Analog AUDIO
Rev	
Date: Tuesday, January 23, 2024	Sheet 27 of 38

TYPEC USB DP IN

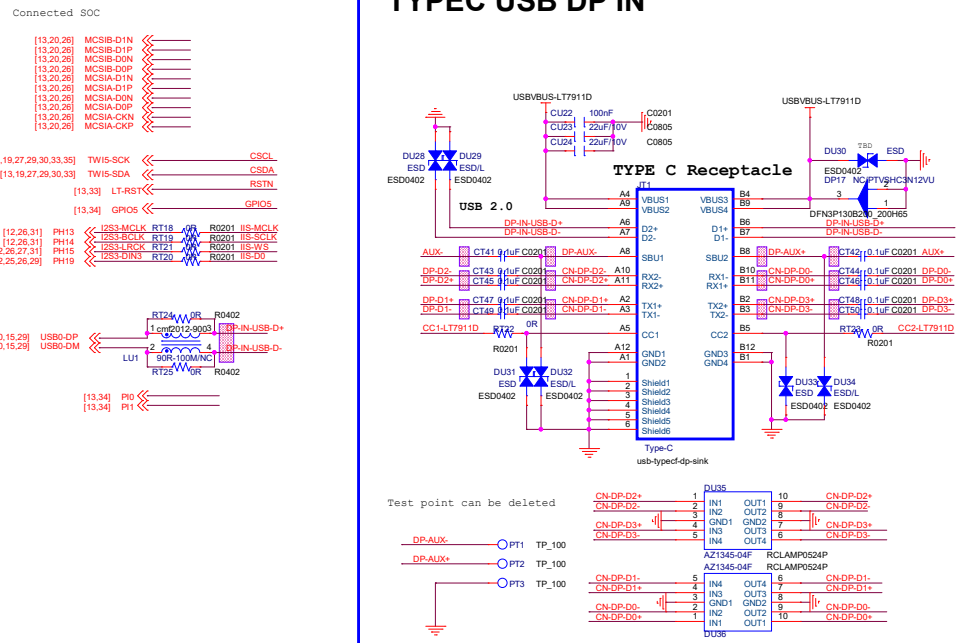

MIPI OUT

If the MIPI output signal is connected to the soc,the GPIO5 and I2C interfaces need to be connected to the soc.GPIO5 can output high level signal within 200ms.Within 200ms,soc can read the registers of the chip via I2C interface,soc can get the resolution and other infomations.

You can control 2d/3d switch via I2C(pin21&22) or GPIO.

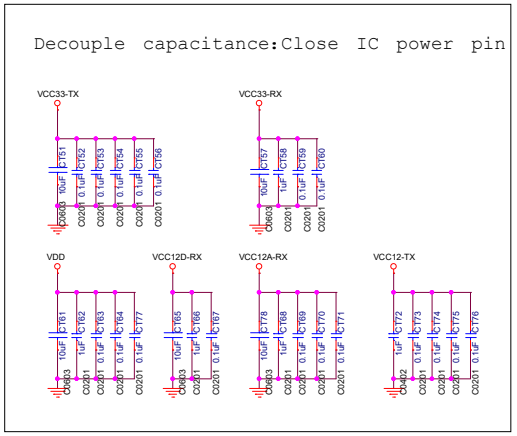

EXTERNAL

Please leave a test point for VSYNC.
If the PCB space is limited,
you can also leave it floating.

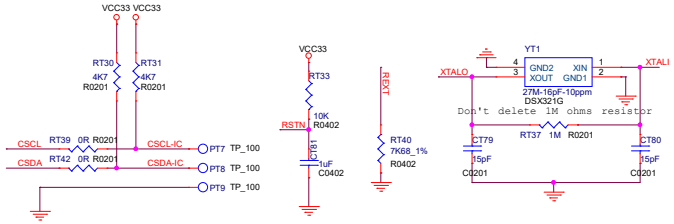

POWER

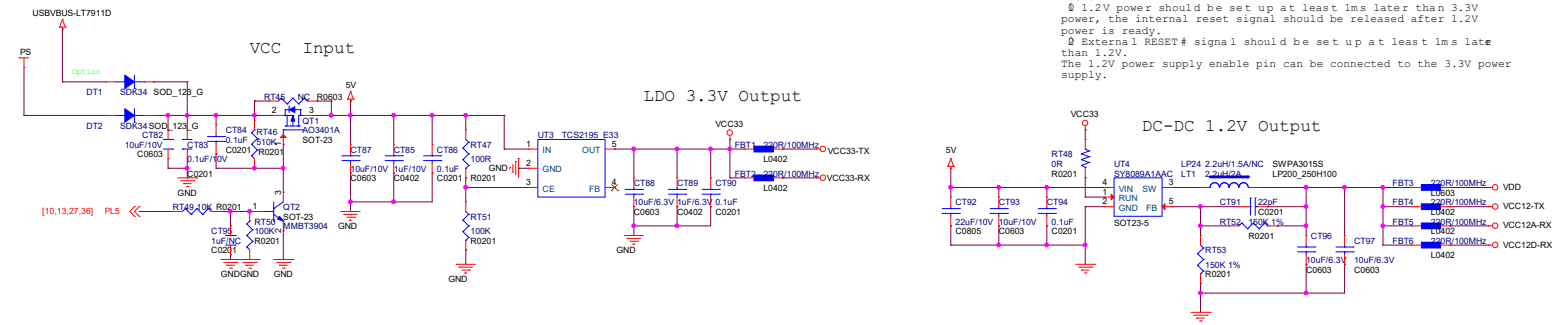

Note:
① 1.2V power should be set up at least 1ms later than 3.3V power, the internal reset signal should be released after 1.2V power is ready.
② External RESET# signal should be set up at least 1ms later than 1.2V.
The 1.2V power supply enable pin can be connected to the 3.3V power supply.

AllWinner Technology Co.,Ltd	
Design Name: T527-STD-AXP717B-LPDDR4-32x1	
Size: A2	Page Name: 28 TypeC DP IN
Rev	
Date: Tuesday, January 23, 2024	Sheet 28 of 38

USB POWER

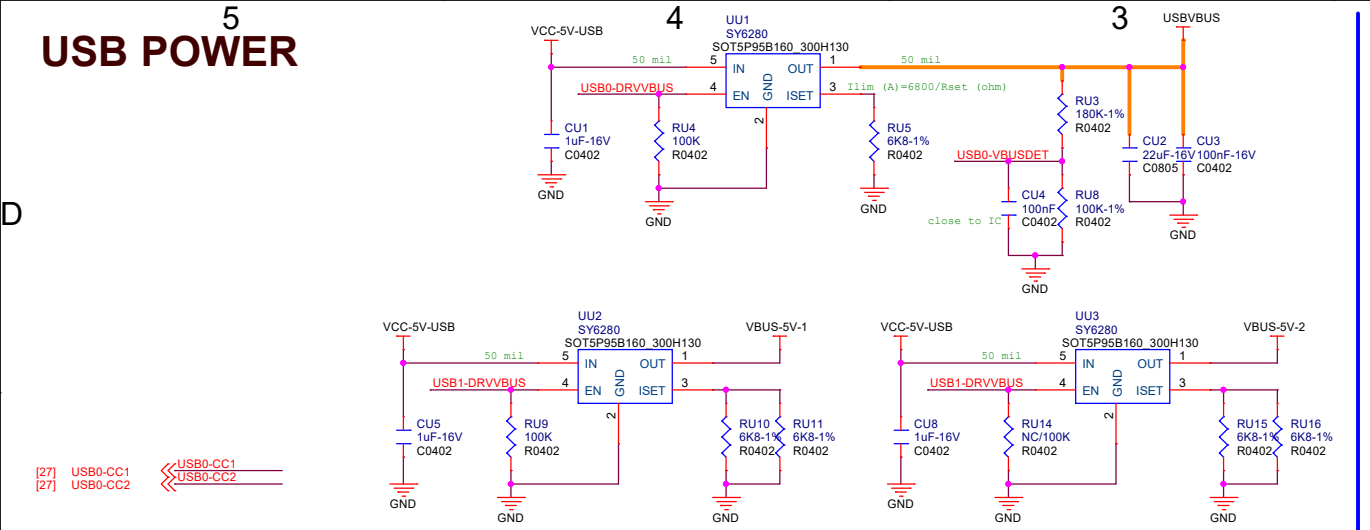

USB CON

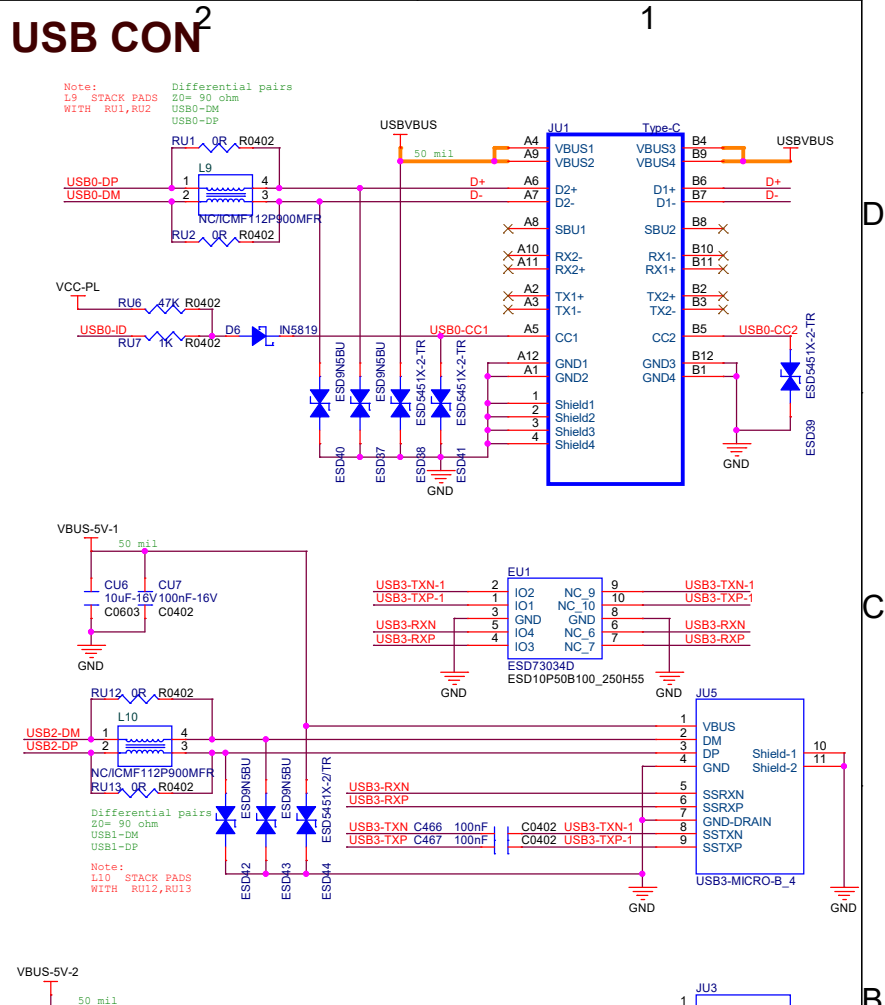

PCIE SLOT

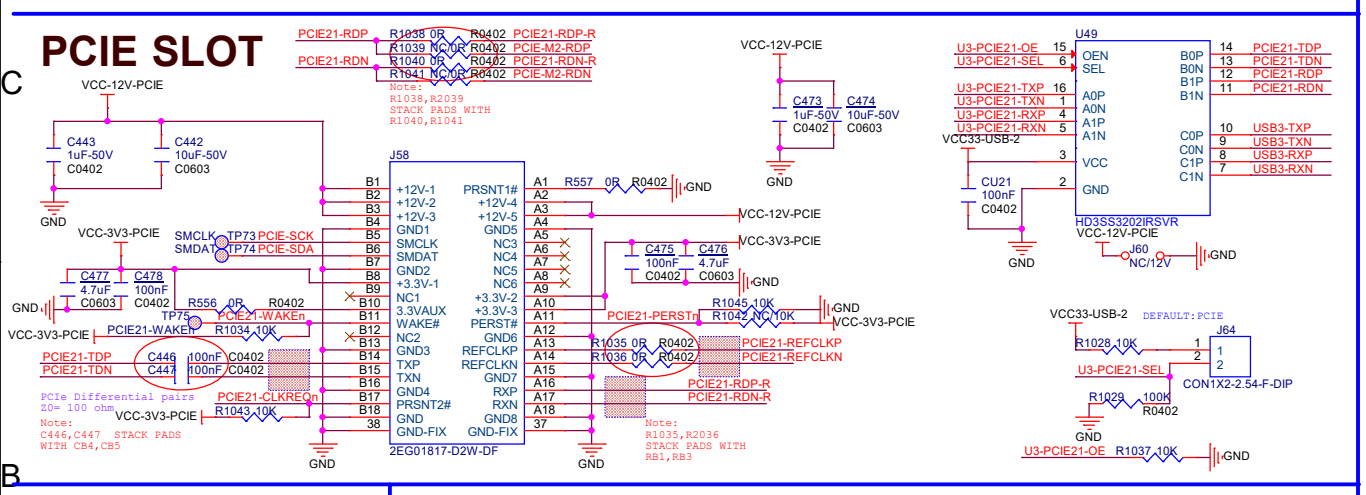

USB HUB

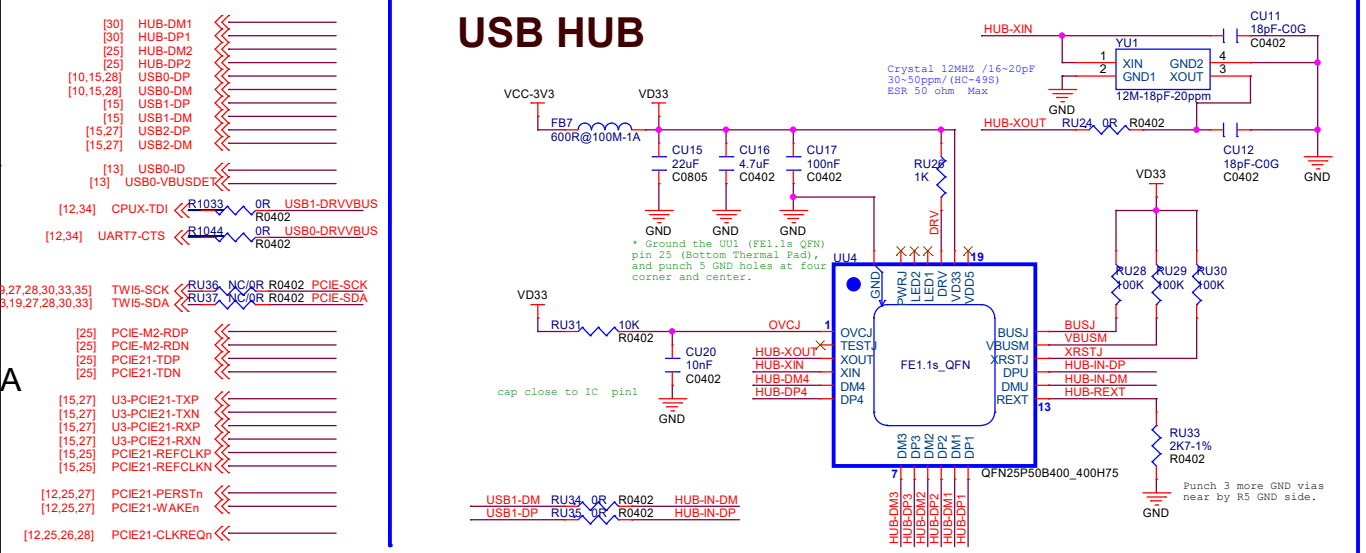

AllWinner Technology Co.,Ltd	
Design Name	T527-STD-AXP717B-LPDDR4-32x1
Size A3	Page Name 29 PCIE2.1/USB3.0/USB2.0
Rev	V1.0
Date: Tuesday, January 23, 2024	Sheet 29 of 38

4G Module

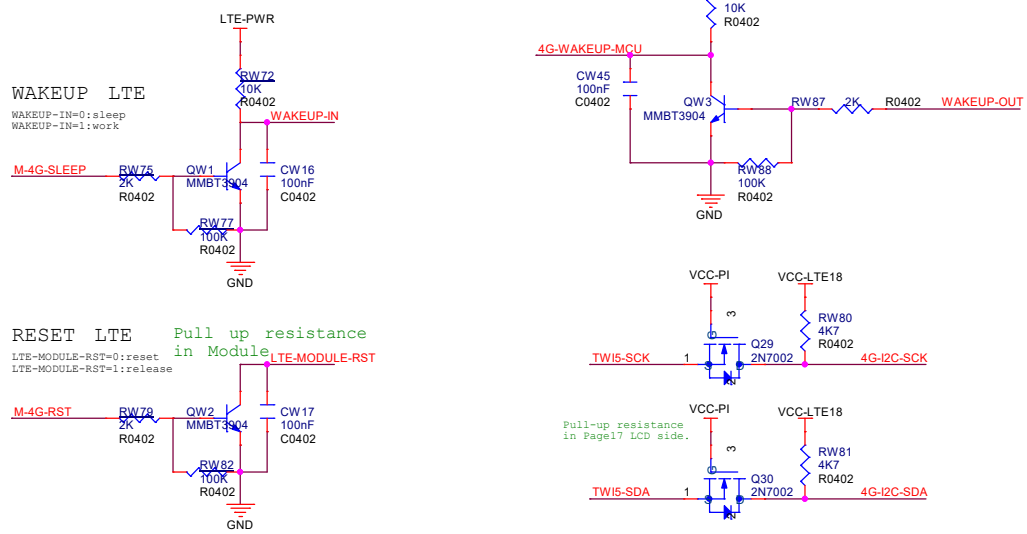

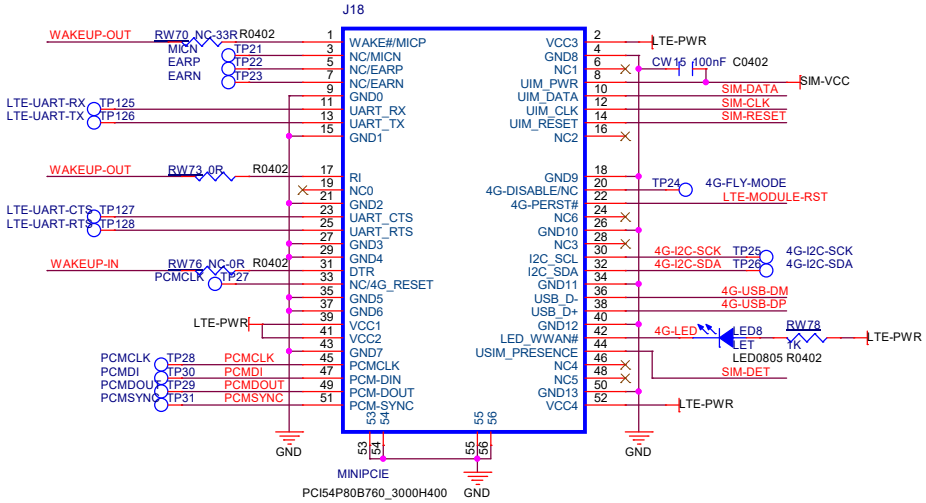

Pin Name	Pin No.
WAKE#	1
RESERVED	3
RESERVED	5
RESERVED	7
GND	9
UART_RX	11
UART_TX	13
GND	15
RI	17
RESERVED	19
GND	21
UART_CTS	23
UART_RTS	25
GND	27
GND	29
DTR	31
RESERVED	33
GND	35
GND	37
VCC_3V3	39
VCC_3V3	41
GND	43
PCM_CLK	45
PCM_DOUT	47
PCM_DI	49
PCM_SYNC	51

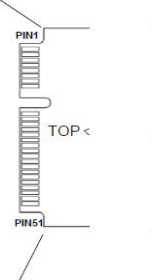

Pin No.	Pin Name
2	VCC_3V3
4	GND
6	NC
8	USIM_VDD
10	USIM_DATA
12	USIM_CLK
14	USIM_RST
16	RESERVED
18	GND
20	W_DISABLE#
22	PERST#
24	RESERVED
26	GND
28	NC
30	I2C_SCL
32	I2C_SDA
34	GND
36	USB_DM
38	USB_DP
40	GND
42	LED_WWAN#
44	USIM_PRESENCE
46	RESERVED
48	NC
50	GND
52	VCC_3V3

SIM Card

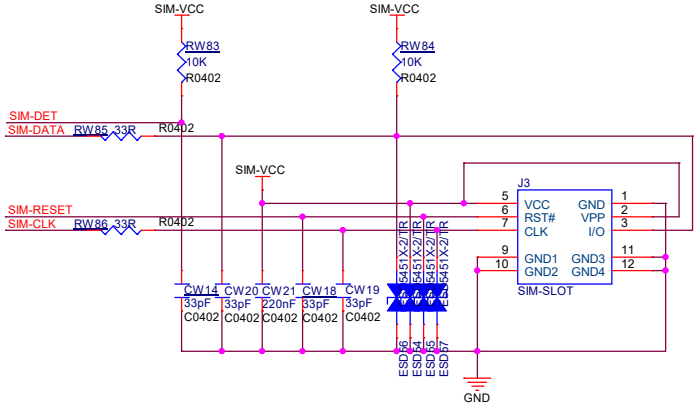

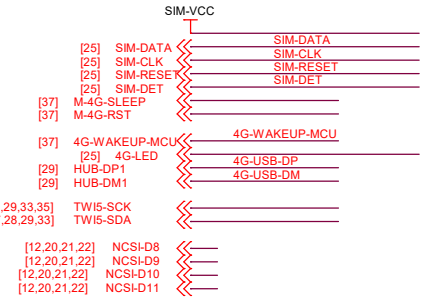

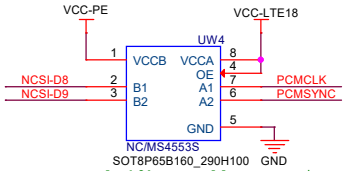

Internal 10kΩ pull-up resistor

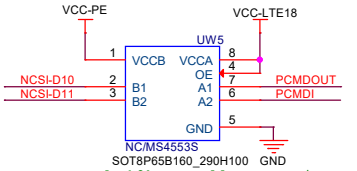

Internal 10kΩ pull-up resistor

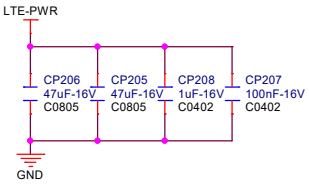

AllWinner Technology Co.,Ltd	
Design Name	T527-STD-AXP717B-LPDDR4-32x1
Size A3	Page Name 30 4G Module
Rev	V1.0
Date: Tuesday, January 23, 2024	Sheet 30 of 38

RGMII

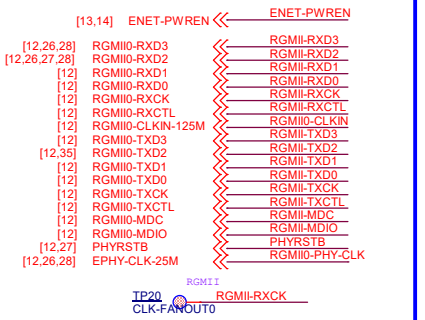

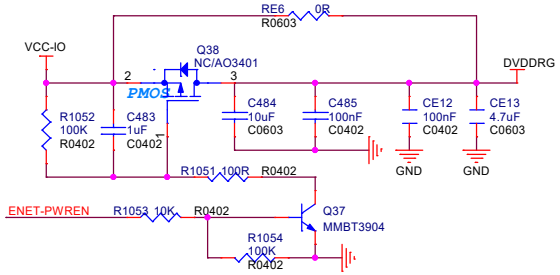

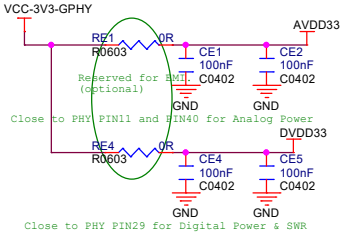

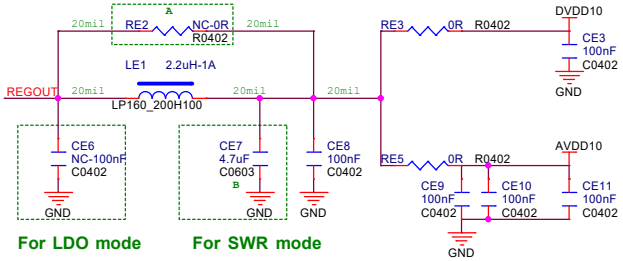

Note 1: RE6 is not needed for ONLY 3.3V RGMII application, and DVDDRG can be connected directly to DVDD33.
Note 2: DVDDRG must be short (or RE10 be mounted) to DVDD33 if the external RGMII 3.3V is selected.
Note 3: RE10 must be removed if the internal or external 2.5V/1.8V/1.5V RGMII is selected.
Note 4: CAPs must be closed to pin28 for EMI consideration.

Note 1: Bypass CAPs close to PHY DVDD10/AVDD10 power pins.
Note 2: Any inductance or bead except L1 is not allowed on the path from REGOUT to DVDD10/AVDD10.
Note 3: A is reserved to change the DVDD10/AVDD10 supply source to LDO mode (RTL8211FD).
Note 4: No design change of PCB model is needed if A is reserved. If only RTL8211FD used for particular PCB model, directly short REGOUT to DVDD10/AVDD10.
Note 5: If RTL8211FI is selected, the B should be replaced as 10uF X7R capacitor for industrial grade application. Please refer to the datasheet for other industrial grade information.

Ethernet PHY

RGMII

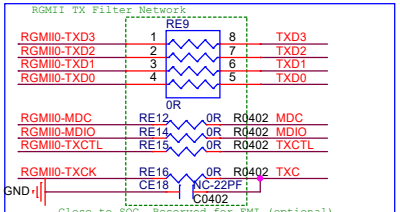

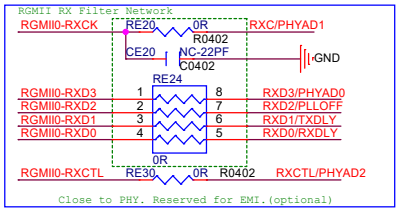

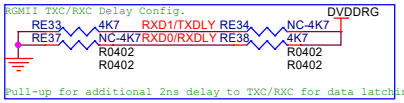

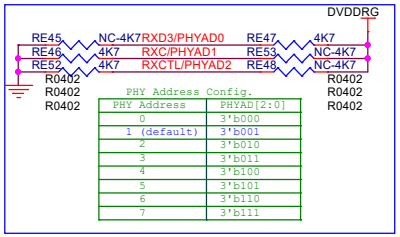

PHY Address	PHYAD[2:0]
0	3'b000
1 (default)	3'b001
2	3'b010
3	3'b011
4	3'b100
5	3'b101
6	3'b110
7	3'b111

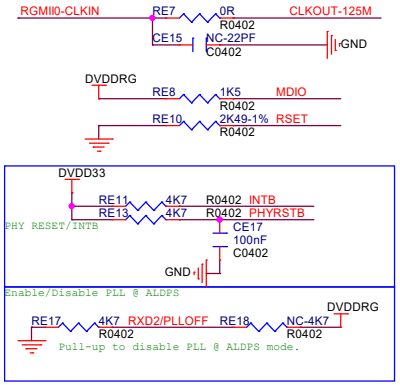

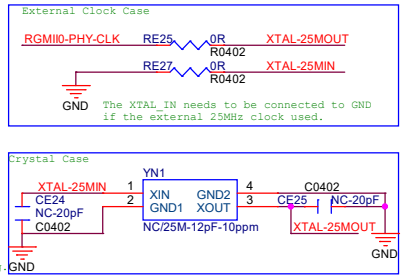

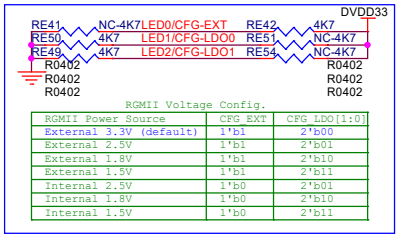

RGMII Power Source	CFG_EXT	CFG_LDO[1:0]
External 3.3V (default)	1'b1	2'b00
External 2.5V	1'b1	2'b01
External 1.8V	1'b1	2'b10
External 1.5V	1'b1	2'b11
Internal 2.5V	1'b0	2'b01
Internal 1.8V	1'b0	2'b10
Internal 1.5V	1'b0	2'b11

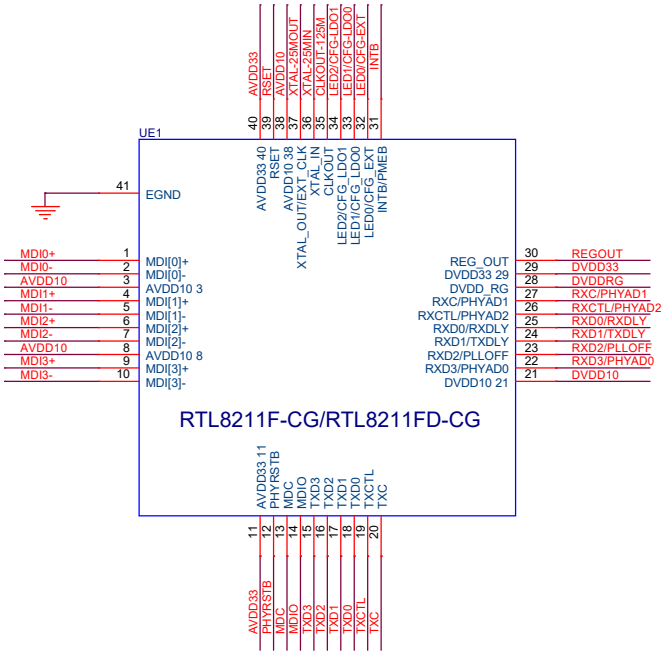

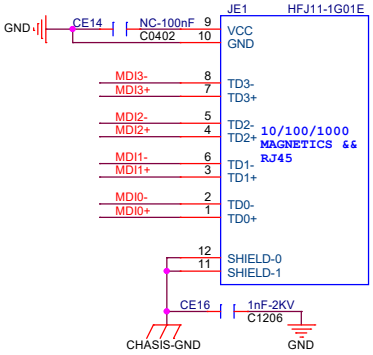

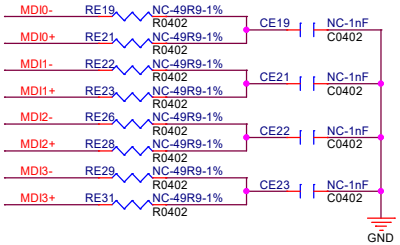

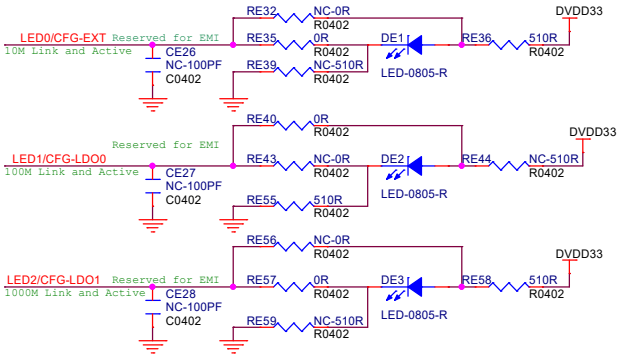

LEDs Configuration	LED Resistances Setting
CFG-EXT=1'b1	RE32(NC), RE35, RE36, RE39(NC)
CFG-EXT=1'b0	RE32, RE35(NC), RE36(NC), RE39
CFG-LDO0=1'b1	RE40(NC), RE43, RE44, R45(NC)
CFG-LDO0=1'b0	RE40, RE43(NC), RE44(NC), RE45
CFG-LDO1=1'b1	RE56(NC), RE57, R58, RE59(NC)
CFG-LDO1=1'b0	RE56, RE57(NC), RE58(NC), RE59

AllWinner Technology Co.,Ltd		
Design Name: T527-STD-AXP717B-LPDDR4-32x1		
Size: A3	Page Name: 31 ETHERNET	Rev: V1.0
Date: Tuesday, January 23, 2024	Sheet 31 of 38	

XR829 ON BOARD

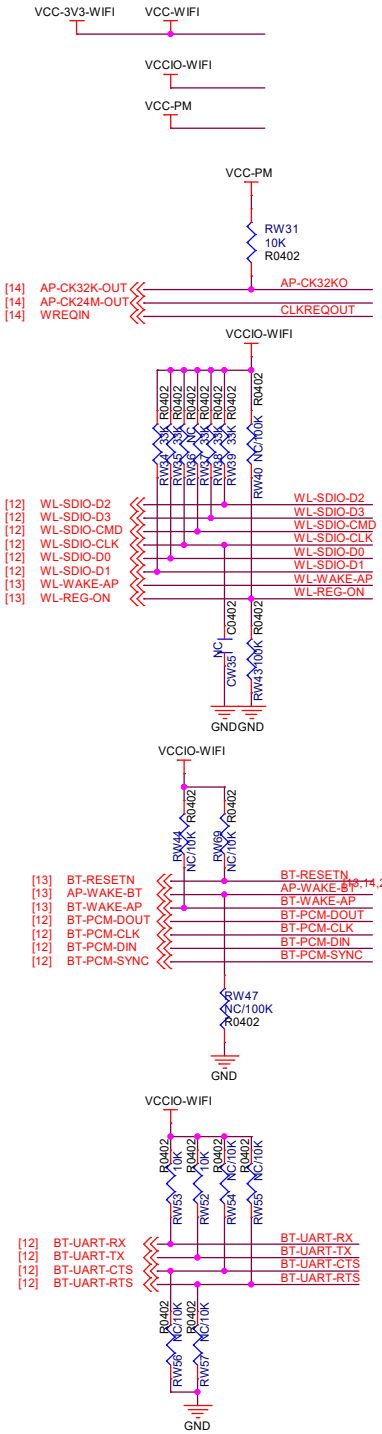

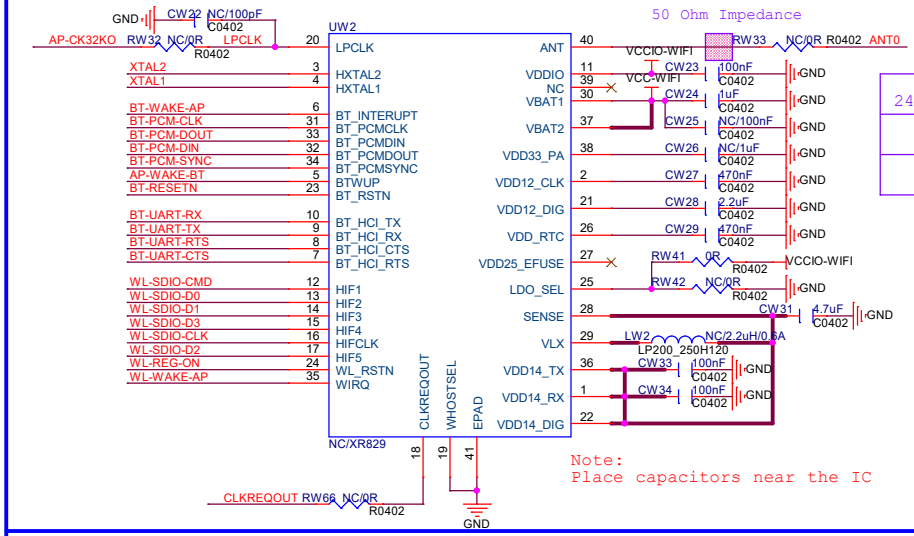

XR829 24M Crystal source	C	D	E
Crystal	24M-16pF-10PPM	C1=20pF,C2=20pF	R1=0R,R2=NC
DCXO-RFCLK	NC	C1=0R,C2=NC	R1=NC,R2=0R

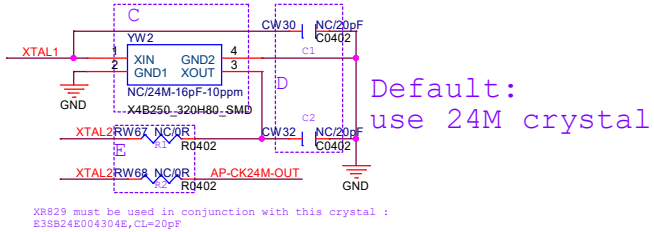

WIFI/BT MODULE

Default:AW869A

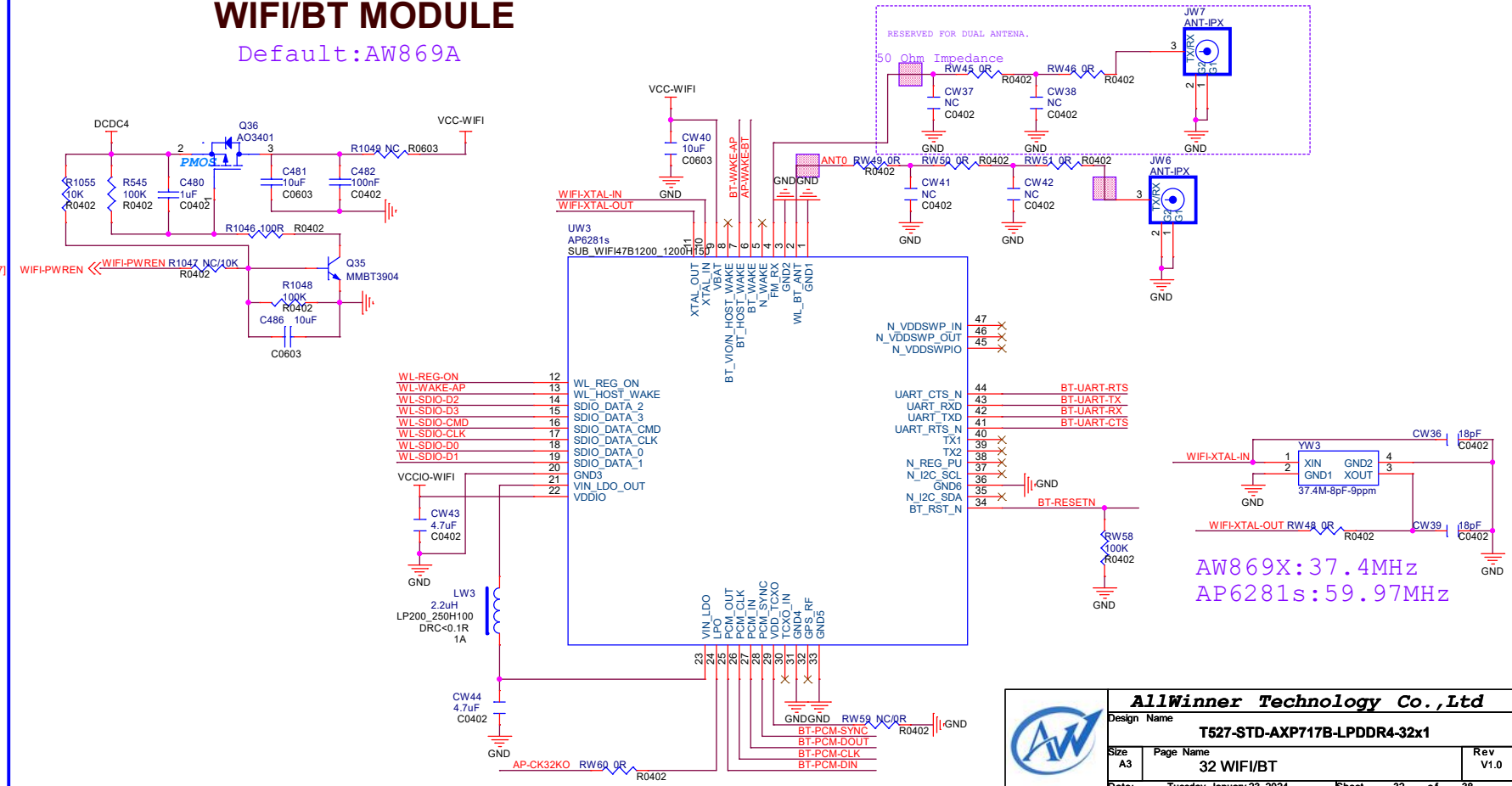

AllWinner Technology Co.,Ltd		
Design Name: T527-STD-AXP717B-LPDDR4-32x1		
Size: A3	Page Name: 32 WIFI/BT	Rev: V1.0
Date: Tuesday, January 23, 2024	Sheet 32 of 38	

GNSS Module

UART4

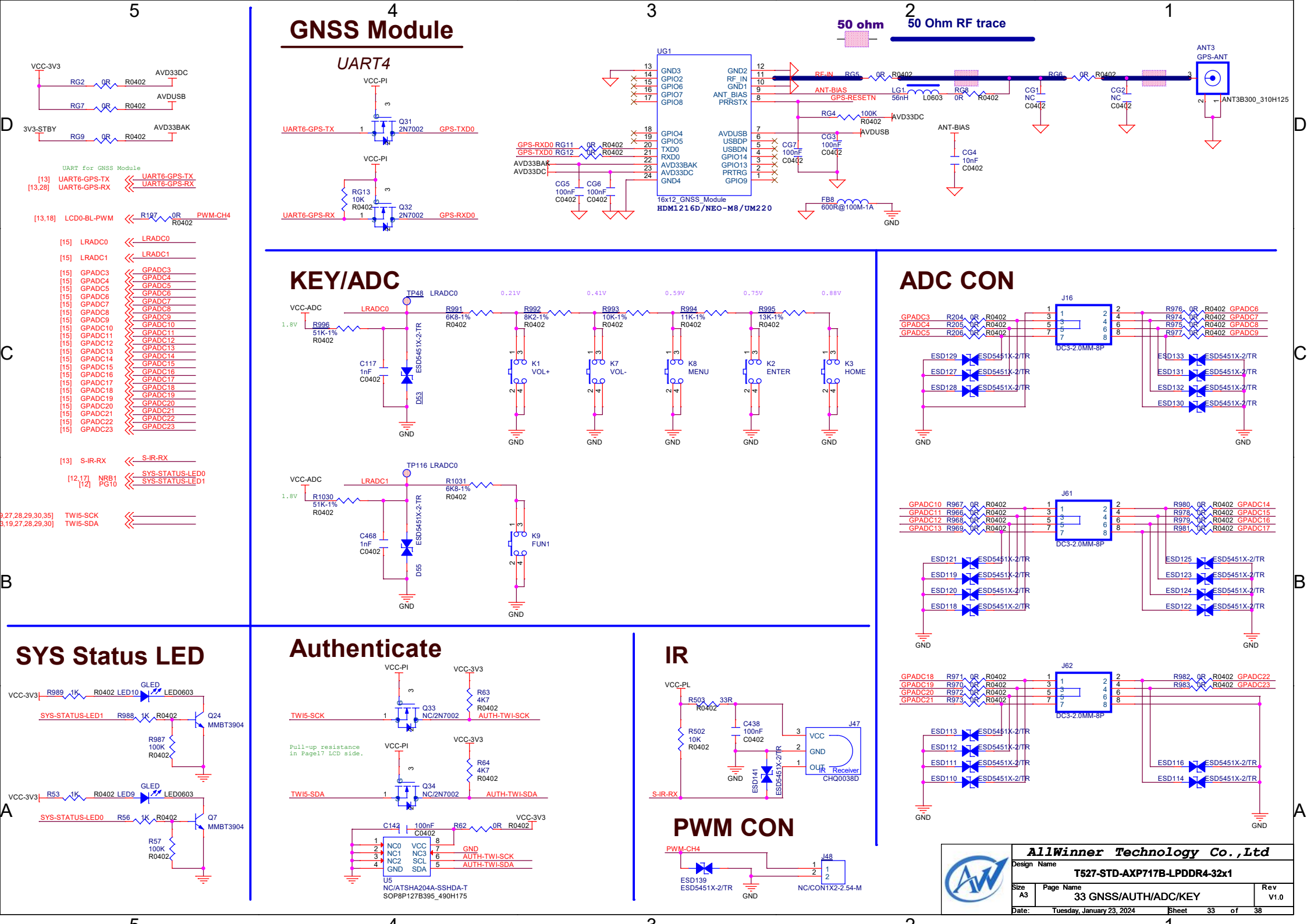

AllWinner Technology Co.,Ltd		
Design Name	T527-STD-AXP717B-LPDDR4-32x1	
Size A3	Page Name 33 GNSS/AUTH/ADC/KEY	Rev V1.0
Date: Tuesday, January 23, 2024	Sheet 33 of 38	

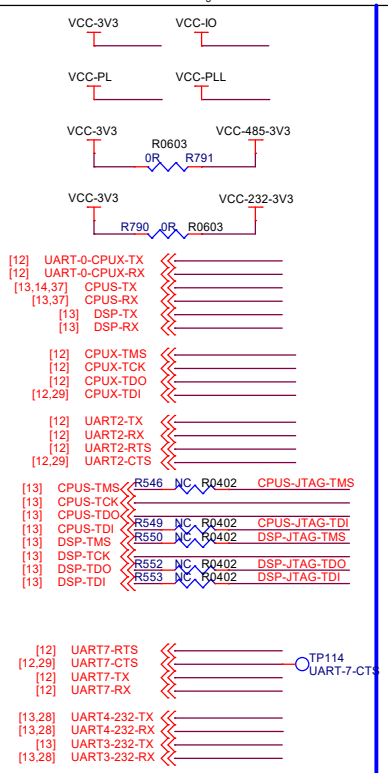

CPUX DEBUG

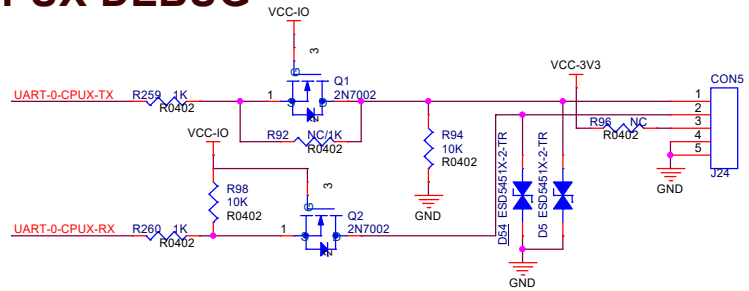

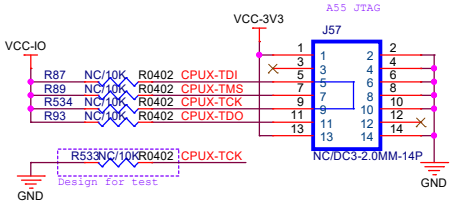

CPUS DEBUG

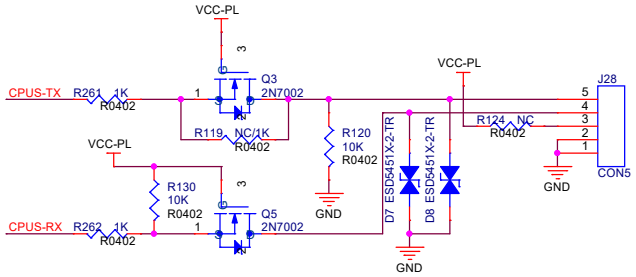

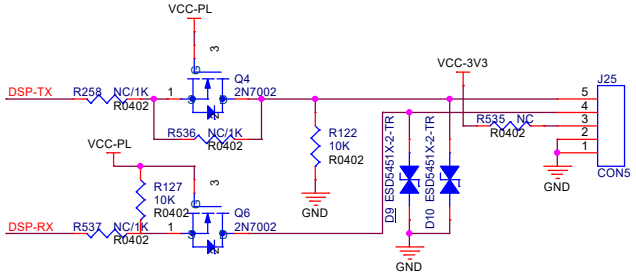

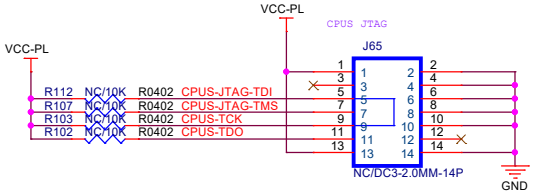

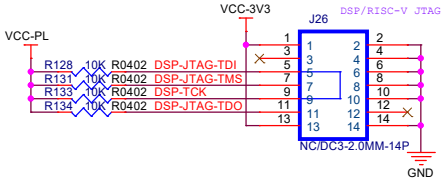

RS232

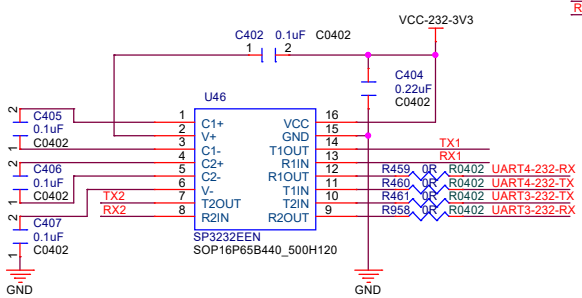

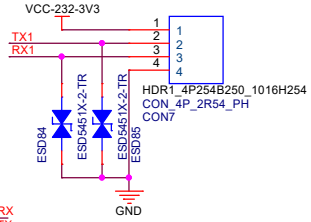

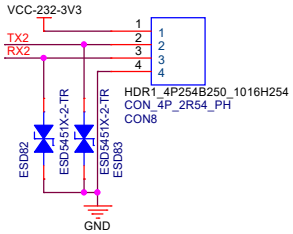

RESERVED USE AS NORMAL UART.

UART4-232-TX	R455	NC/0R	R0402	TX1	UART3-232-TX	R456	NC/0R	R0402	TX2
UART4-232-RX	R457	NC/0R	R0402	RX1	UART3-232-RX	R458	NC/0R	R0402	RX2

RS485

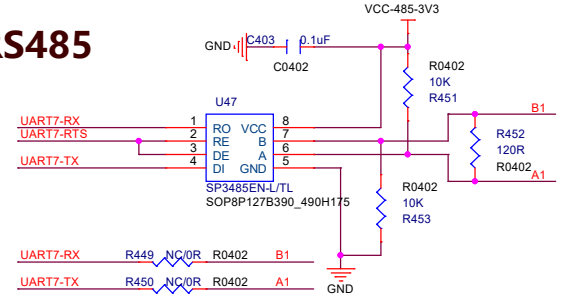

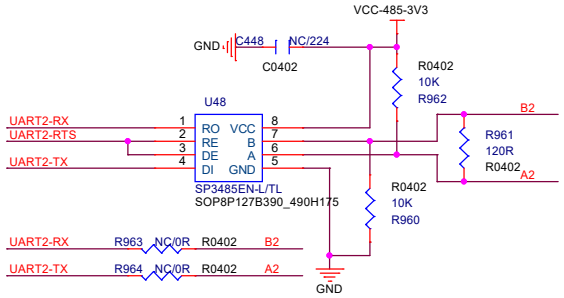

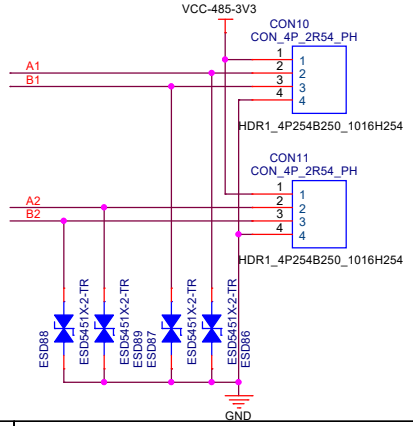

AllWinner Technology Co.,Ltd			
Design Name	T527-STD-AXP717B-LPDDR4-32x1		
Size A3	Page Name 34 DEBUG/RS232/TEST		Rev V1.0
Date: Tuesday, January 23, 2024	Sheet 34 of 38		

IR

[12,31] IR-TX
[13,19,27,28,29,30,33] IR-RX

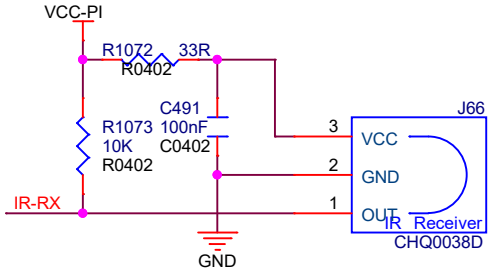

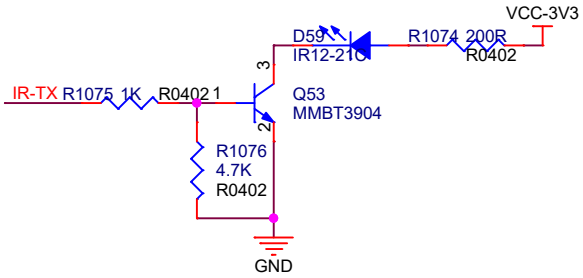

AllWinner Technology Co.,Ltd			
Design Name	T527-STD-AXP717B-LPDDR4-32x1		
Size A4	Page Name 35 IR RX/TX		Rev
Date: Tuesday, January 23, 2024	Sheet 35 of 40		

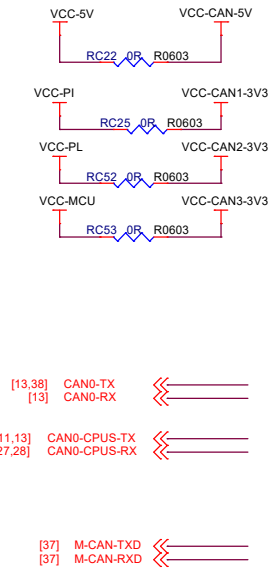

CAN Trans 1

CAN0

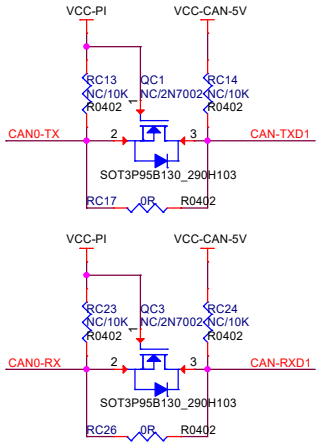

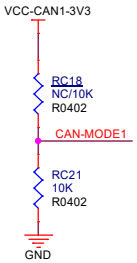

Mode Select:
1 = Silent Mode
0 = High-speed Mode

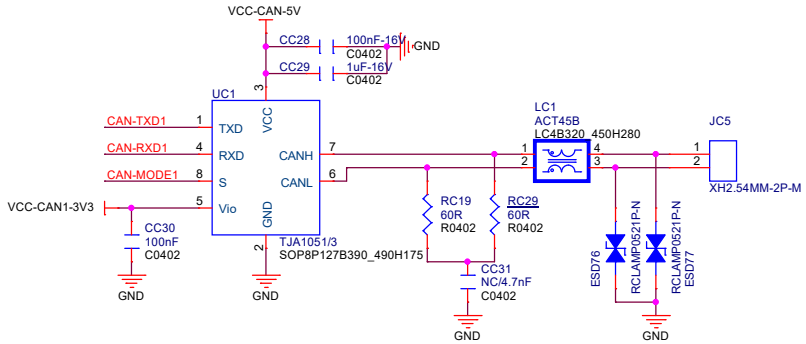

Note:
If use 5V CAN Transceiver, must check I/O level and consider to use level shift circuit.

If CAN Transceiver support 3.3V I/O level, level shift circuit should not mounted.

CAN Trans 2

CAN1

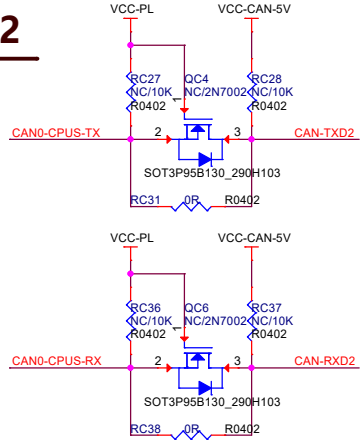

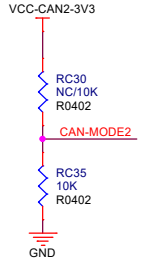

Mode Select:
1 = Silent Mode
0 = High-speed Mode

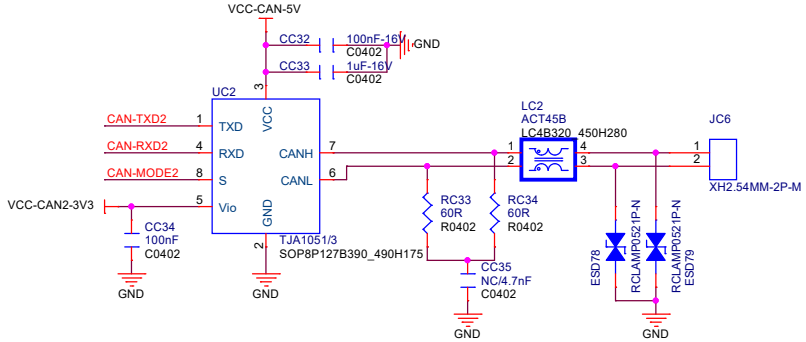

Note:
If use 5V CAN Transceiver, must check I/O level and consider to use level shift circuit.

If CAN Transceiver support 3.3V I/O level, level shift circuit should not mounted.

CAN Trans 3

MCU-CAN0

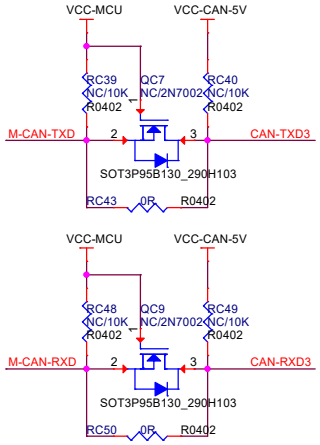

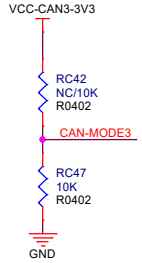

Mode Select:
1 = Silent Mode
0 = High-speed Mode

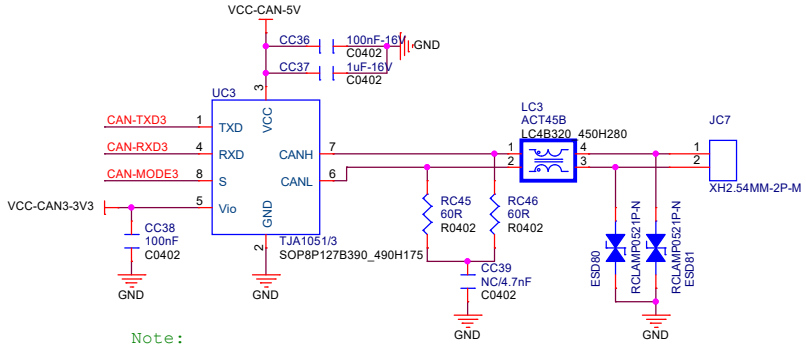

Note:
If use 5V CAN Transceiver, must check I/O level and consider to use level shift circuit.

If CAN Transceiver support 3.3V I/O level, level shift circuit should not mounted.

AllWinner Technology Co.,Ltd		
Design Name: T527-STD-AXP717B-LPDDR4-32x1		
Size: A3	Page Name: 36 CAN	Rev: V1.0
Date: Tuesday, January 23, 2024	Sheet 36 of 38	

EXT-MCU

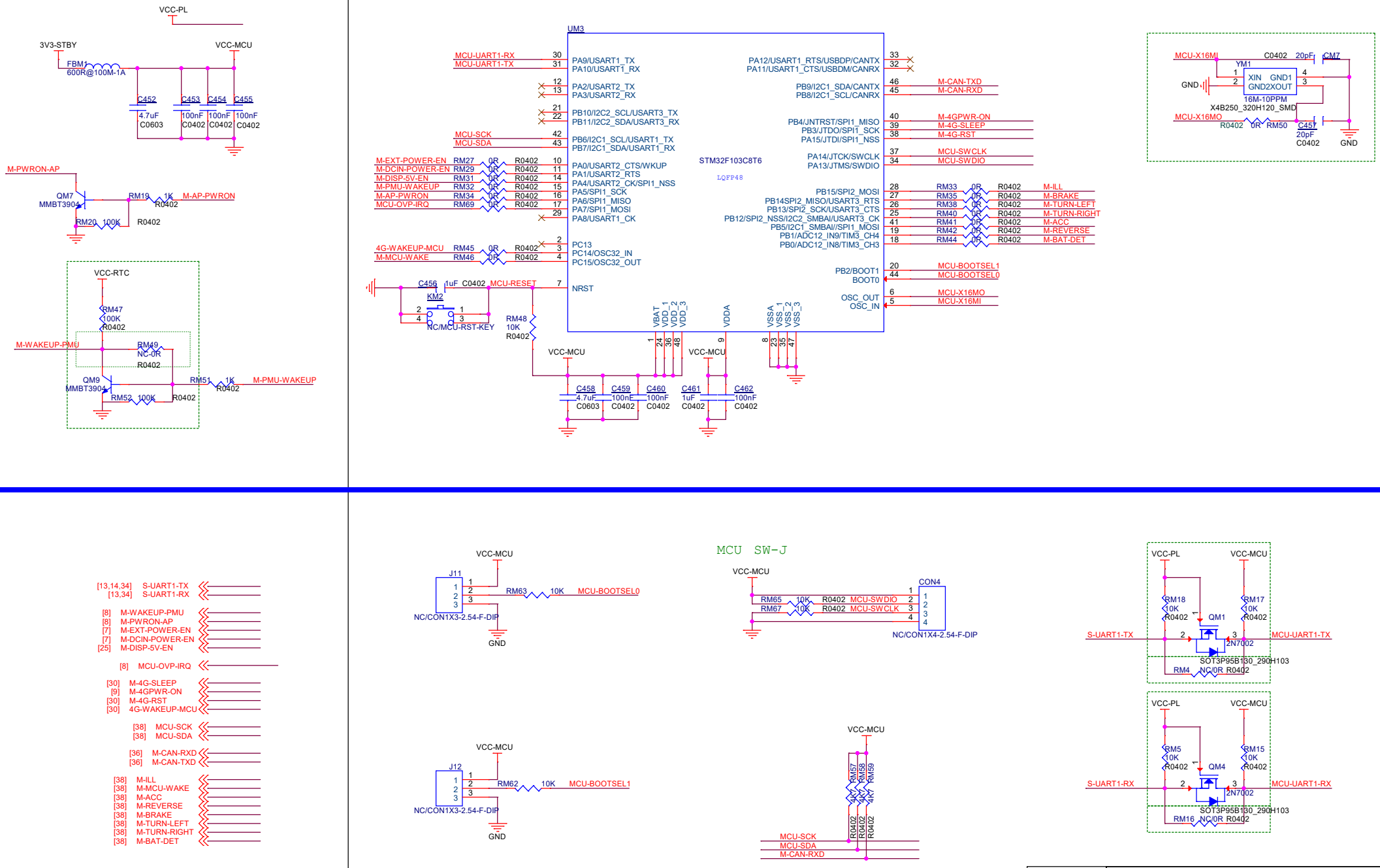

AllWinner Technology Co.,Ltd		
Design Name: T527-STD-AXP717B-LPDDR4-32x1		
Size: A3	Page Name: 37 MCU	Rev: V1.0
Date: Tuesday, January 23, 2024	Sheet 37 of 38	

EXT-SIG DET

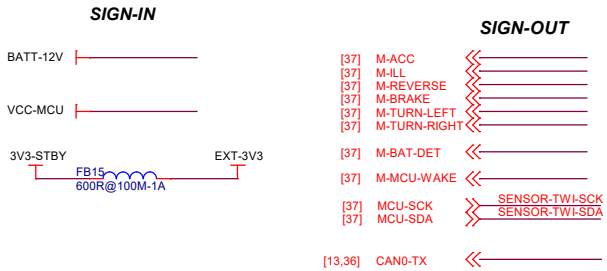

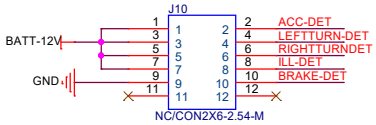

3D G-SENSOR

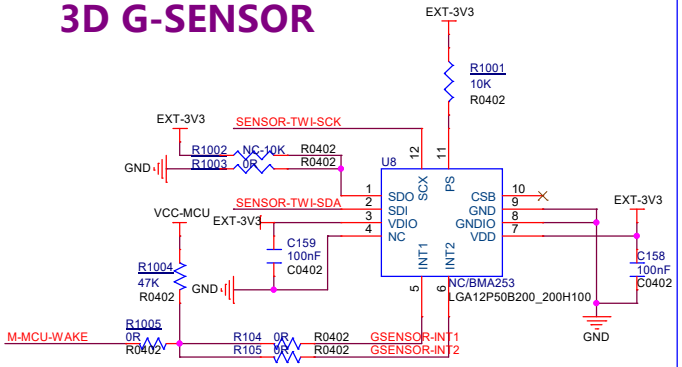

7Bits I2C Address: 0x18

MARK POINT

HOLE

PLEASE ADD MARK POINT FOR SMT

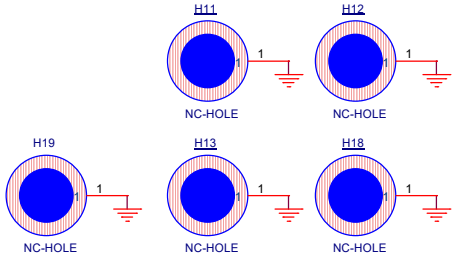

Battery Voltage Detect

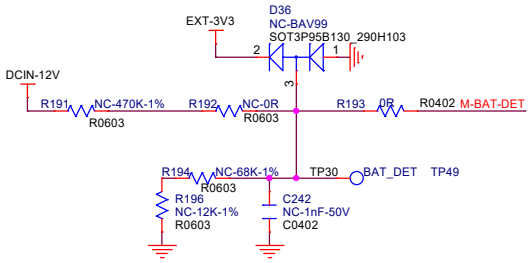

车电压检测 试要求除 24V 外）。
电压 B+=14V, DET=2.03 6V
1：当 B+电压升到 14V±0.5时，DET=2.63V±0.073，MCU会关机。
2：当 B+电压降到 9V±0.5时，DET=1.30V±0.073，MCU会activate
3：当 B+电压降到 5.5V±0.5时，DET=0.84V±0.073，MCU会关机。

Brake Detect

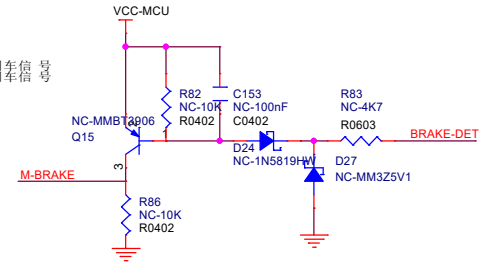

TURN Light

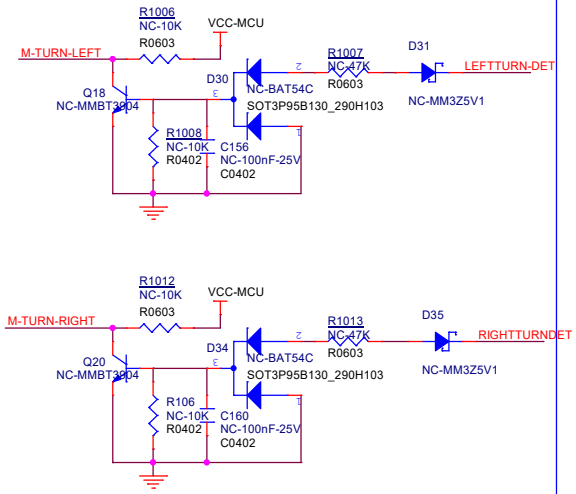

ACC Detect

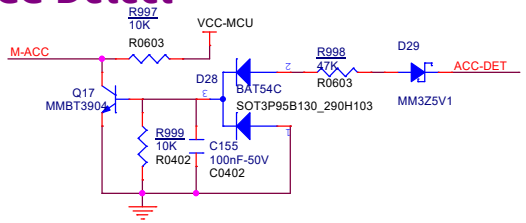

REVERSE Detect

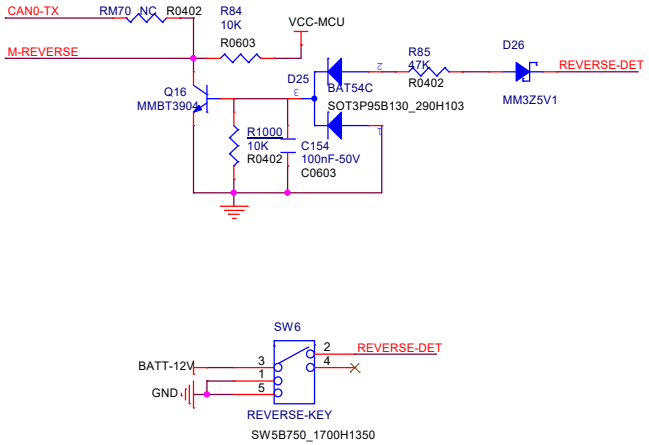

ILL IN Detect

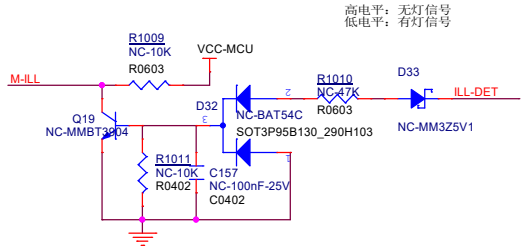

AllWinner Technology Co.,Ltd		
Design Name: T527-STD-AXP717B-LPDDR4-32x1		
Size: A3	Page Name: 38 EXT-SIG Detect	Rev: V1.0
Date: Tuesday, January 23, 2024	Sheet 38 of 38	