VERSION HISTORY

Index:

Page1	01 VERSION HISTORY
Page2	02 BLOCK DIAGRAM
Page3	03 POWER TREE SYSTEM
Page4	04 GPIO ASSIGNMENT
Page5	05 TWI&UART MAP
Page6	06 POWER-SYSTEM
Page7	07 POWER-DEV
Page8	08 POWER AXP515
Page9	09 POWER AXP519
Page10	10 CORE
Page11	11 LCD0
Page12	12 LCD1
Page13	13 CAM
Page14	14 AUDIO CODEC
Page15	15 Audio DSP/Audio OUT
Page16	16 Audio AMP
Page17	17 FM Tunner
Page18	18 EDP/HDMI
Page19	19 PCIE2.1/USB3.0/USB2.0
Page20	20 ETHERNET
Page21	21 4G Module
Page22	22 WIFI/BT
Page23	23 GNSS/AUTH/ADC/KEY
Page24	24 DEBUG/RS232/TEST
Page25	25 USB3/TYPEC
Page26	26 MCU
Page27	27 EXT-SIG Detect

Revision	Description	Date
Ver 0.9	Release version	2023-04-18

Description

Note

Option

BLOCK

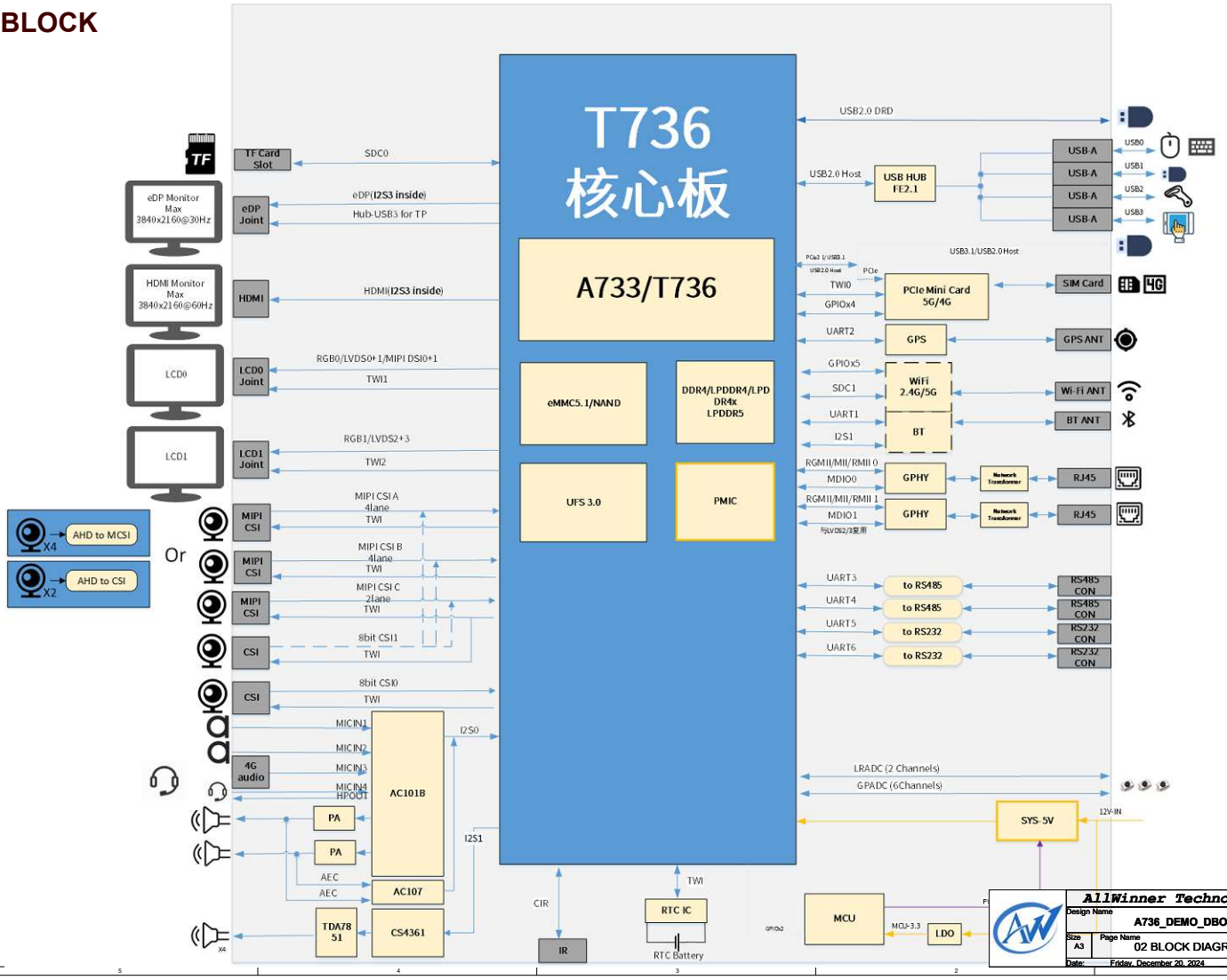

AllWinner Technology Co.,Ltd		
Design Name	A736_DEMO_DBOARD_V1_0	
Size A3	Page Name 02 BLOCK DIAGRAM	Rev V1.0
Date: Friday, December 20, 2024	Sheet 2 of 27	

POWER TREE SYSTEM

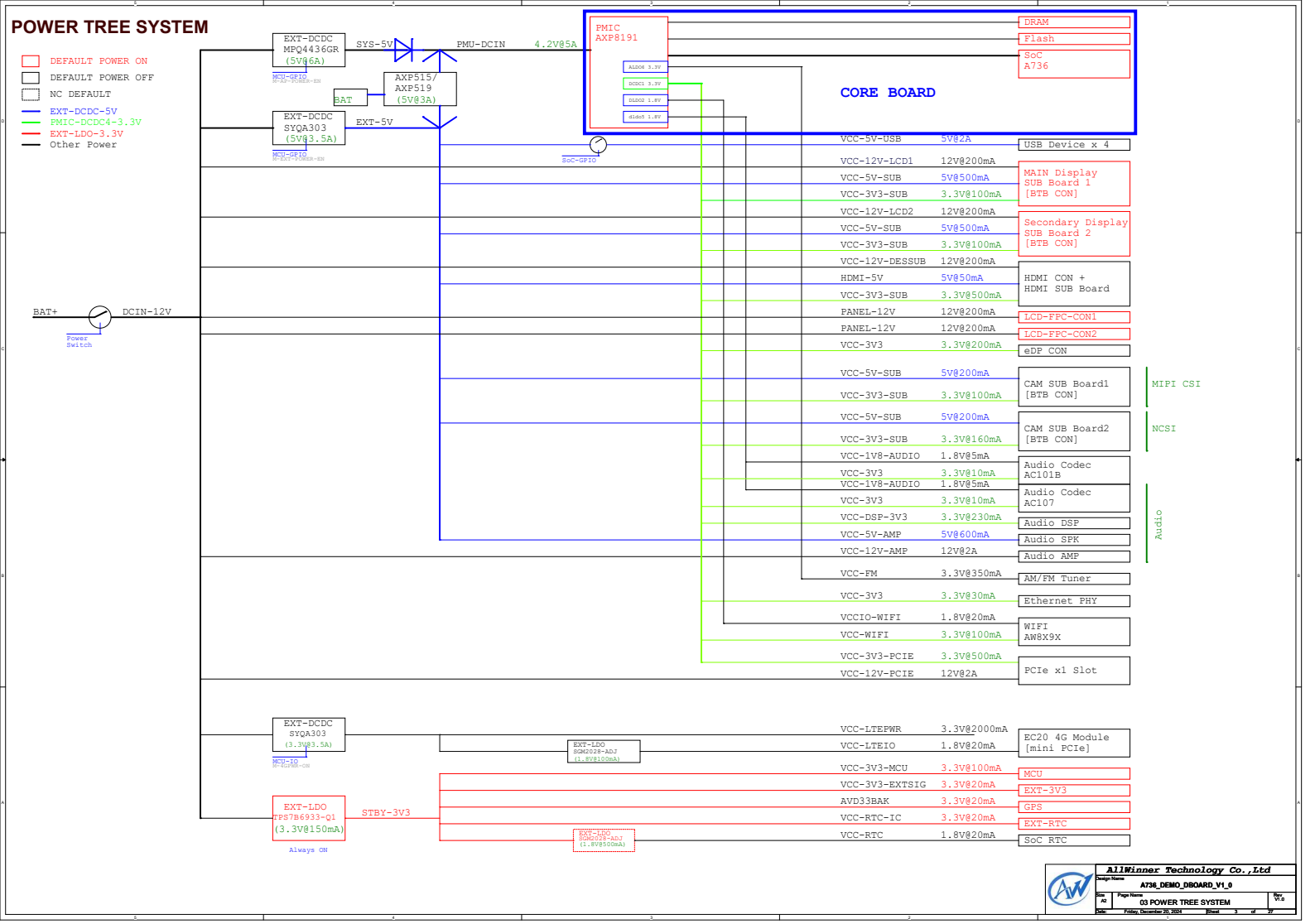

AllWinner Technology Co.,Ltd			
Design Name: A736_DEMO_DBOARD_V1_0			
Size: A2	Page Name: 03 POWER TREE SYSTEM		Rev: V1.0
Date: Friday, December 20, 2024	Sheet 3 of 37		

GPIO ASSIGNMENT

AllWinner Technology Co.,Ltd			
Design Name	A736_DEMO_DBOARD_V1_0		
Size A3	Page Name 05 GPIO ASSIGNMENT		Rev V1.0
Date: Friday, December 20, 2024		Sheet 4 of 27	

TWI MAP

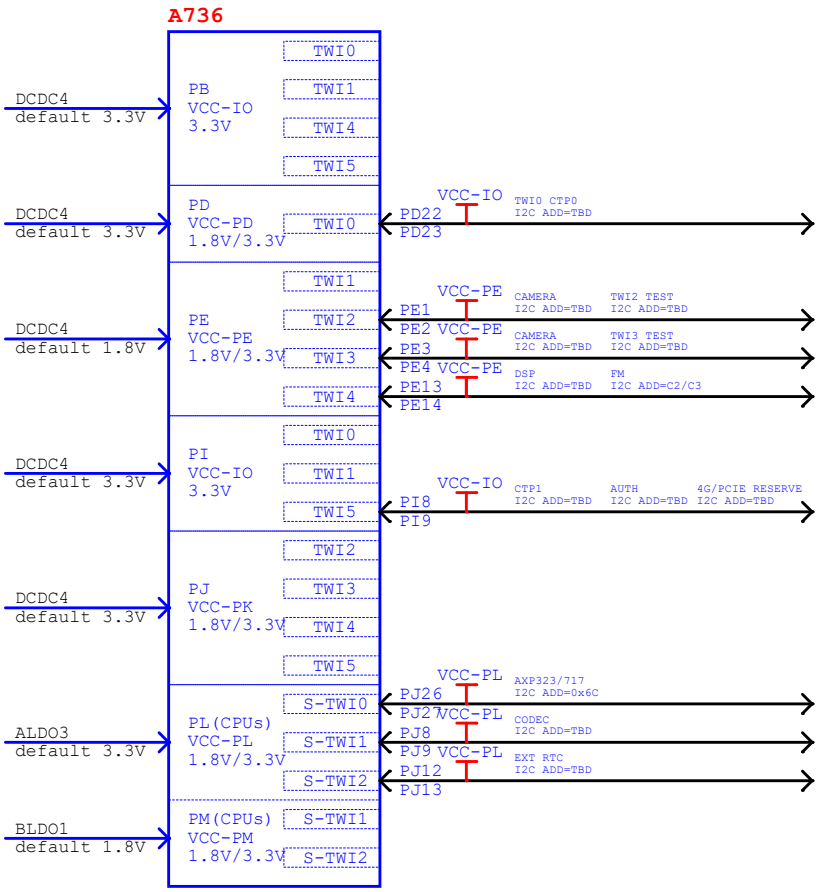

UART MAP

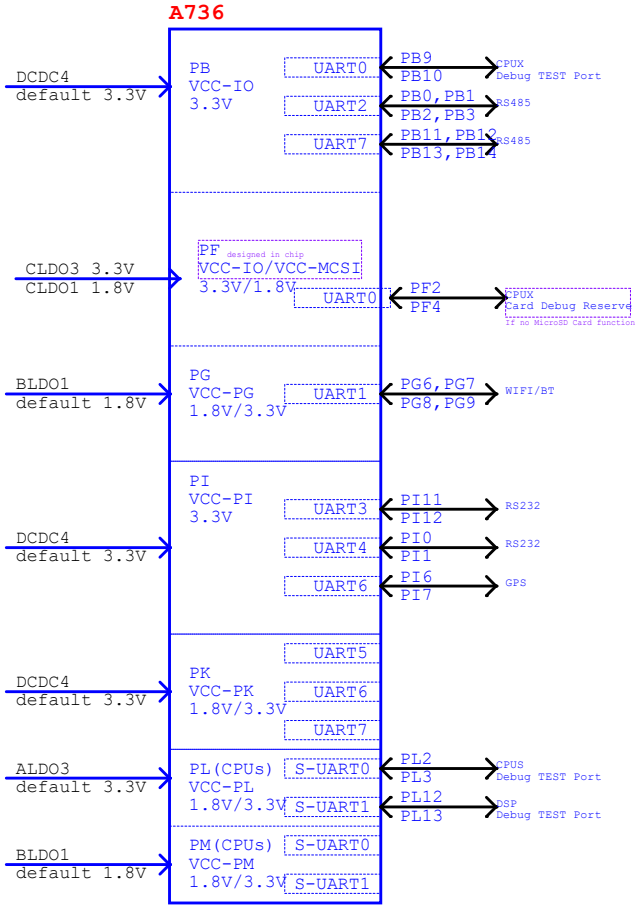

AllWinner Technology Co.,Ltd			
Design Name	A736_DEMO_DBOARD_V1_0		
Size A3	Page Name 06 TWI&UART MAP		Rev V1.0
Date: Friday, December 20, 2024	Sheet 5 of 27		

SYS PWR

DCIN-12V

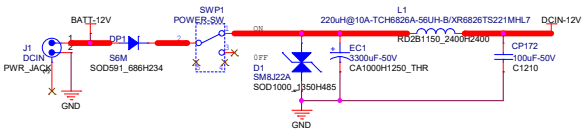

APSYS-4V For SOC

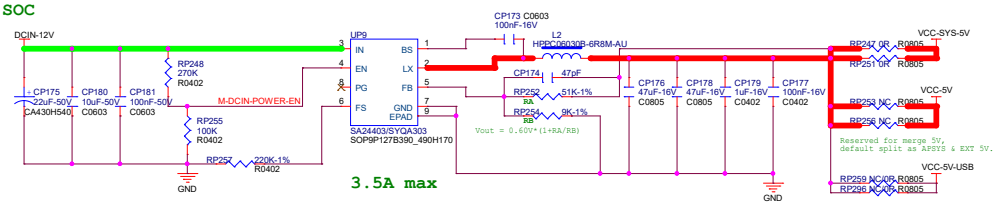

3.5A max

5V For CAM、AMP、USB-5V

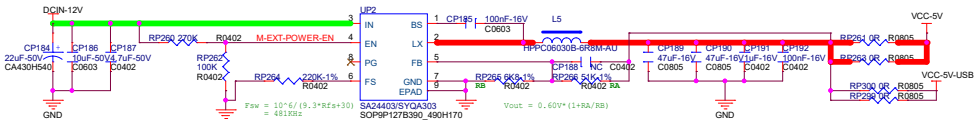

3.5A max

1.2V For RX IC DVDD&AVDD

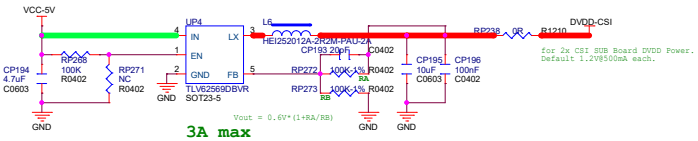

3A max

STBY-3V3 For MCU、EXT-DET、GPS

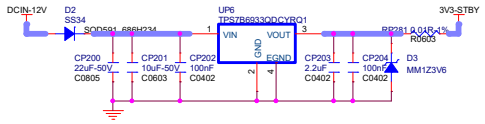

26 M-DCIN-POWER-EN
26 M-EXT-POWER-EN

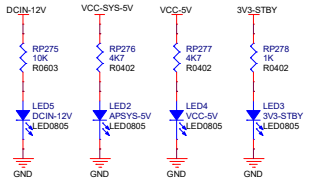

AllWinner Technology Co.,Ltd		
Design Name: A736_DEMO_DBOARD_V1_0		
Size: A3	Page Name: 07 POWER-SYSTEM	Rev: V1.0
Date: Friday, December 20, 2024	Sheet 6 of 27	

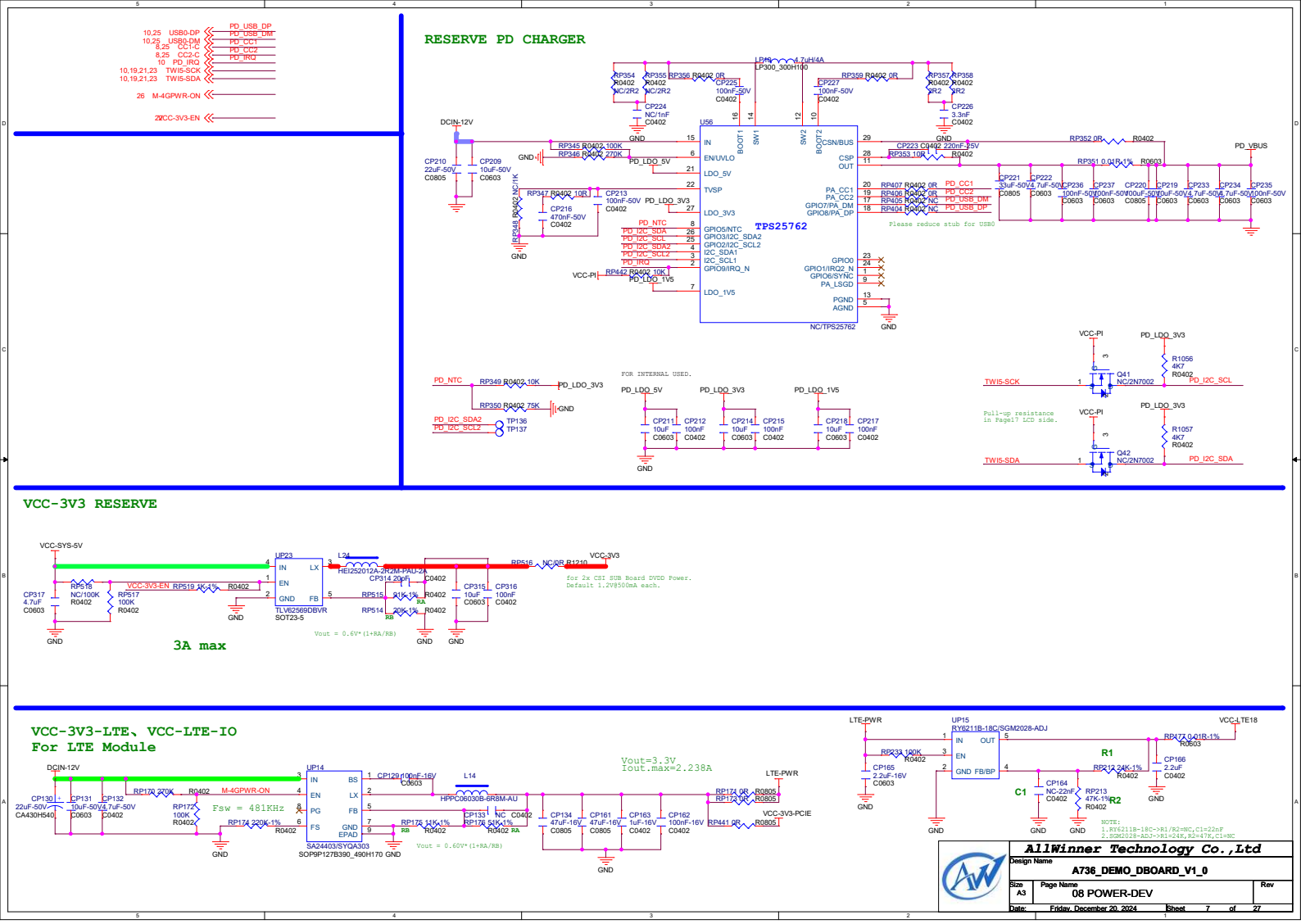
RESERVE PD CHARGER
TPS25762
NC/TPS25762
DCIN-12V
PD_VBUS
Please reduce stub for USB0
FOR INTERNAL USED.
Pull-up resistance in Page17 LCD side.
VCC-3V3 RESERVE
VCC-SYS-5V
VCC-3V3
3A max
for 2x CSI SUB Board DVDD Power.
Default 1.2V@500mA each.
Vout = 0.6V*(1+RA/RB)
VCC-3V3-LTE、VCC-LTE-IO
For LTE Module
Vout=3.3V
Iout.max=2.238A
Fsw = 481KHz
LTE-PWR
VCC-LTE18
VCC-3V3-PCIE
NOTE:
1.RY6211B-18C->R1/R2=NC,C1=22nF
2.SGM2028-ADJ->R1=24K,R2=47K,C1=NC
AllWinner Technology Co.,Ltd
Design Name
A736_DEMO_DBOARD_V1_0
Size A3
Page Name 08 POWER-DEV
Rev
Date: Friday, December 20, 2024
Sheet 7 of 27

Main Charger

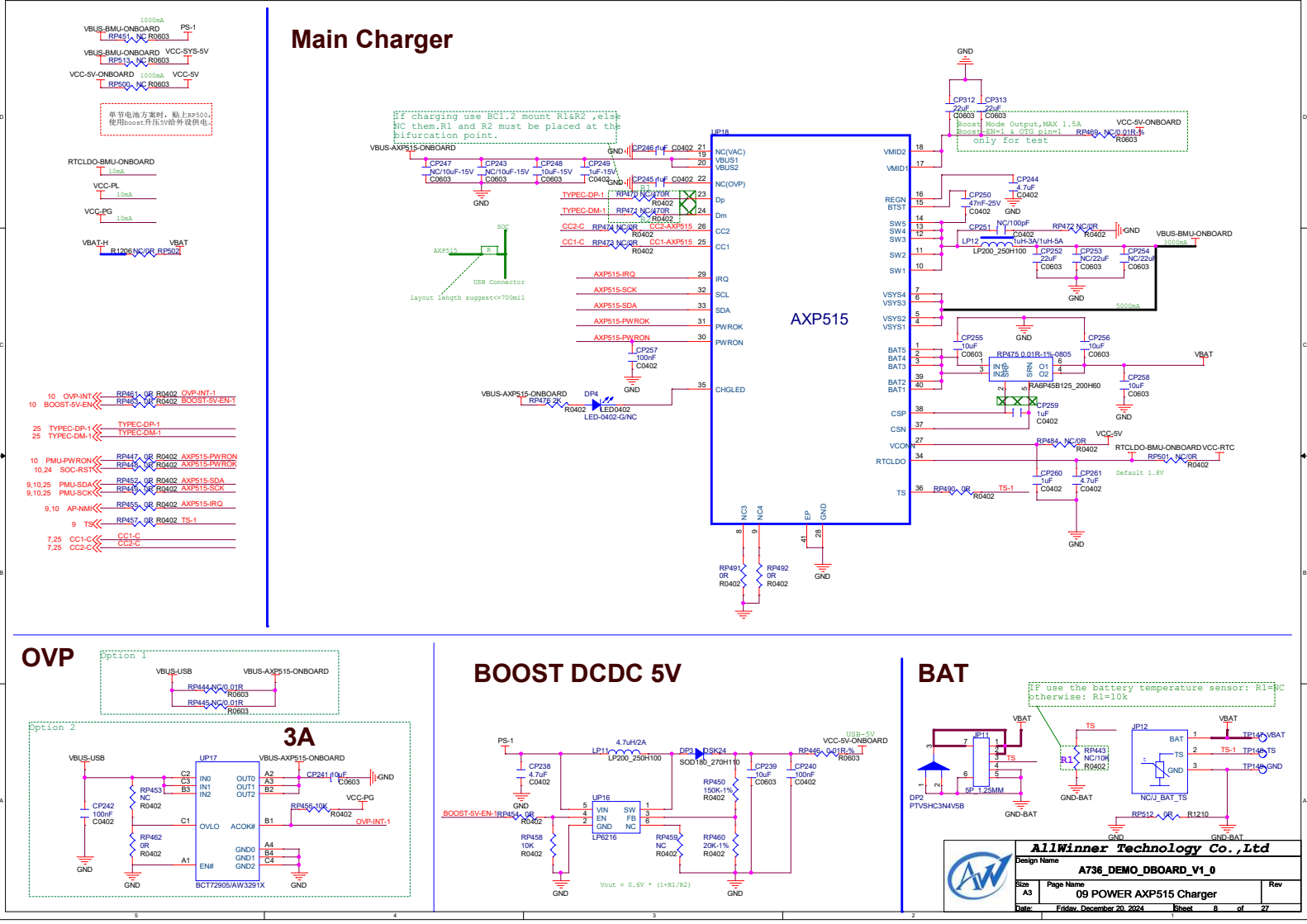

OVP

BOOST DCDC 5V

BAT

AllWinner Technology Co.,Ltd		
Design Name: A736_DEMO_DBOARD_V1_0		
Size: A3	Page Name: 09 POWER AXP515 Charger	Rev
Date: Friday, December 20, 2024	Sheet 8 of 27	

QUICK CHARGER -nCELL

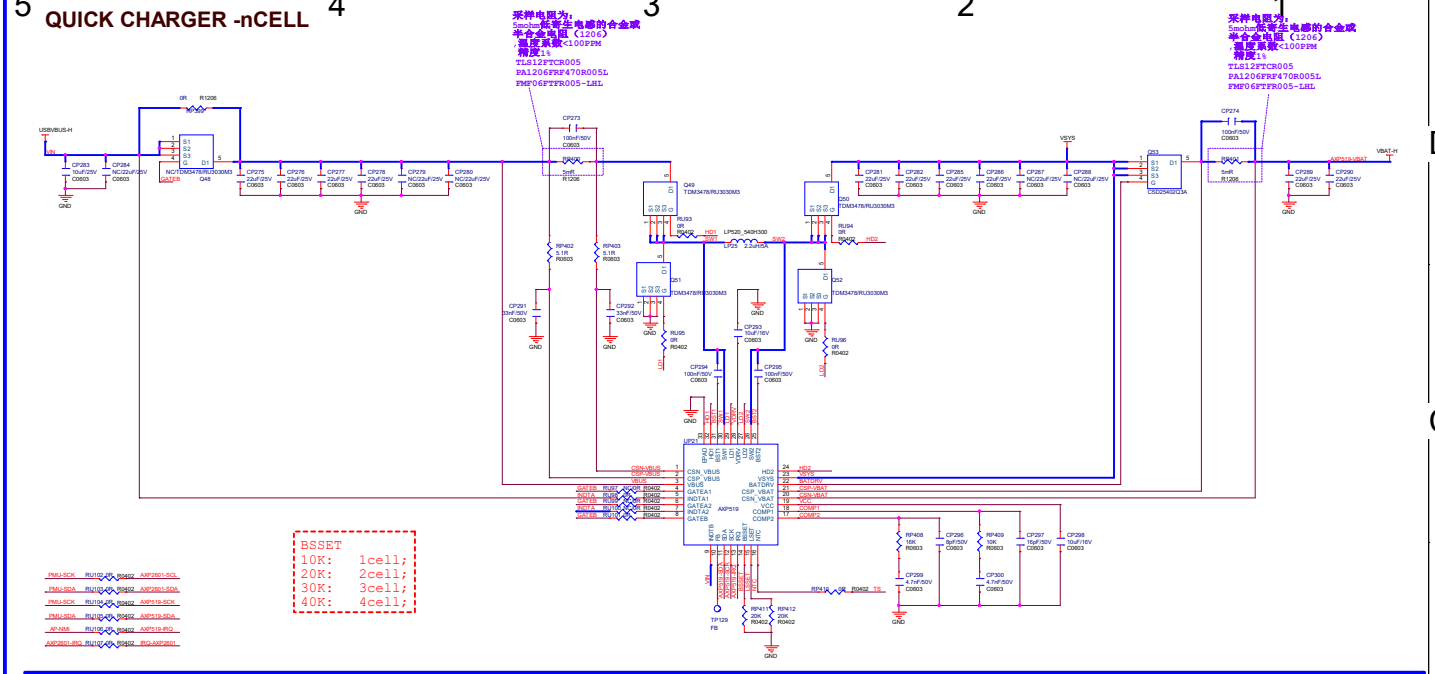

AXP2601/2

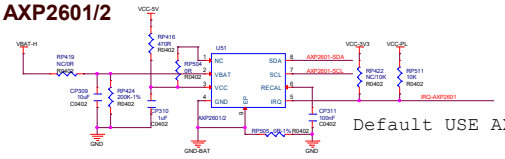

Default USE AXP2601

OPTION 1

DCDC For VCC-5V

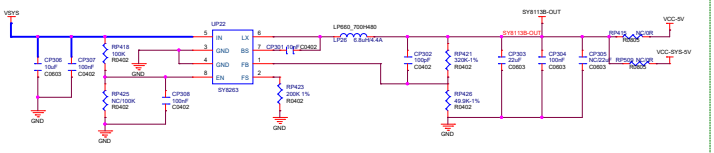

OPTION 2 : DEFAULT USE

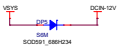

AllWinner Technology Co.,Ltd	
Design Name	A736_DEMO_DBOARD_V1_0
Size A2	Page Name 09 POWER AXP515 Charger
Rev	
Date: Friday, December 20, 2024	Sheet 9 of 27

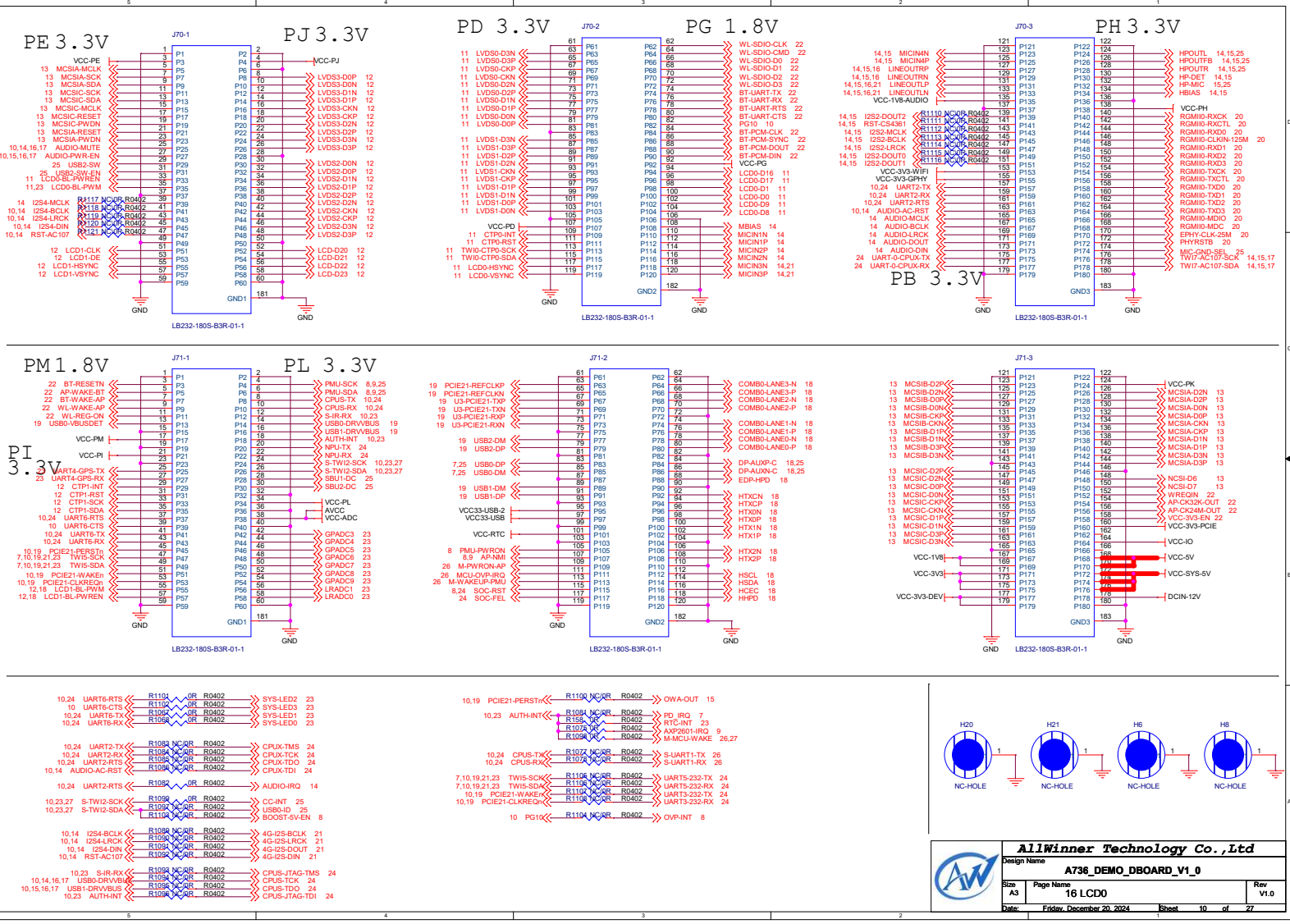

AllWinner Technology Co.,Ltd		
Design Name: A736_DEMO_DBOARD_V1_0		
Size: A3	Page Name: 16 LCD0	Rev: V1.0
Date: Friday, December 20, 2024	Sheet 10 of 27	

LCD0 FPC CON

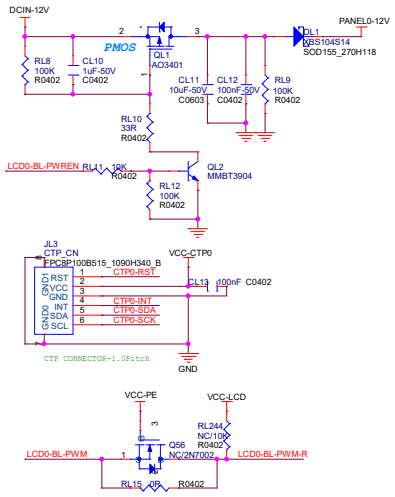

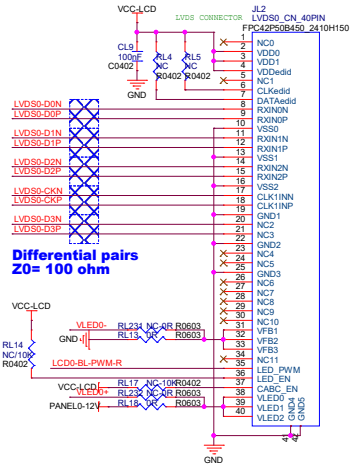

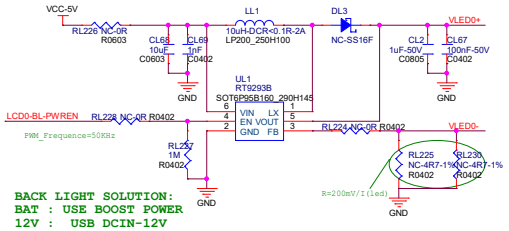

BACK LIGHT SOLUTION:
BAT : USE BOOST POWER
12V : USB DCIN-12V

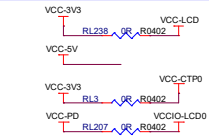

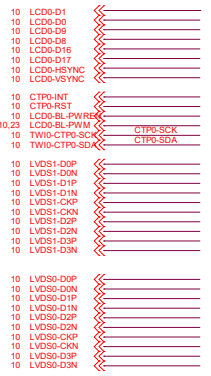

Note
ESD PROTECT COMPONENT PLACE CLOSE TO CONNETCTOR.

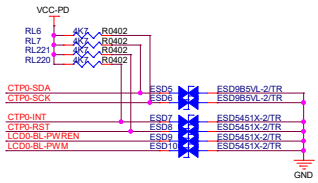

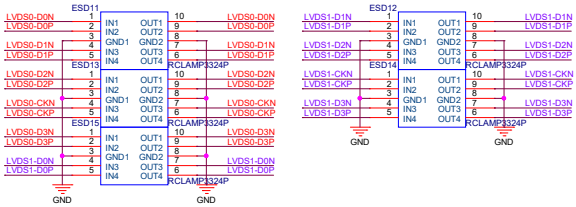

BTB CON For MIPI DSI/dual LVDS

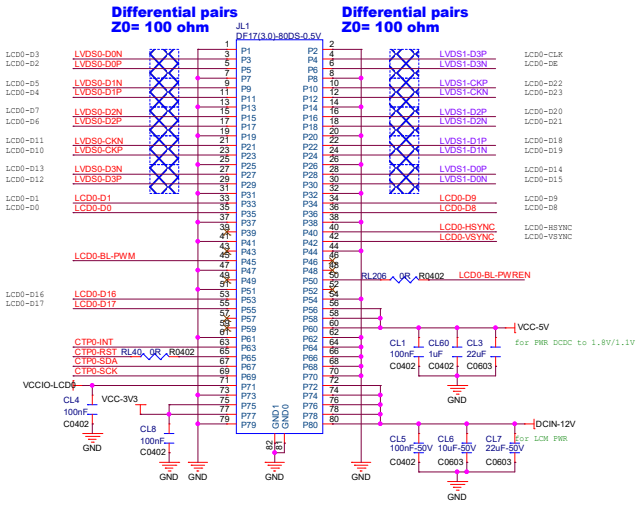

Note: It is recommended that the PCB trace length of MIPI DSI is less than 2000mil

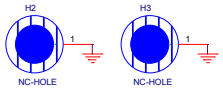

AllWinner Technology Co.,Ltd			
Design Name	A736_DEMO_DBOARD_V1_0		
Size A3	Page Name 16 LCD0		Rev V1.0
Date: Friday, December 20, 2024	Sheet 11 of 27		

LCD FPC CON

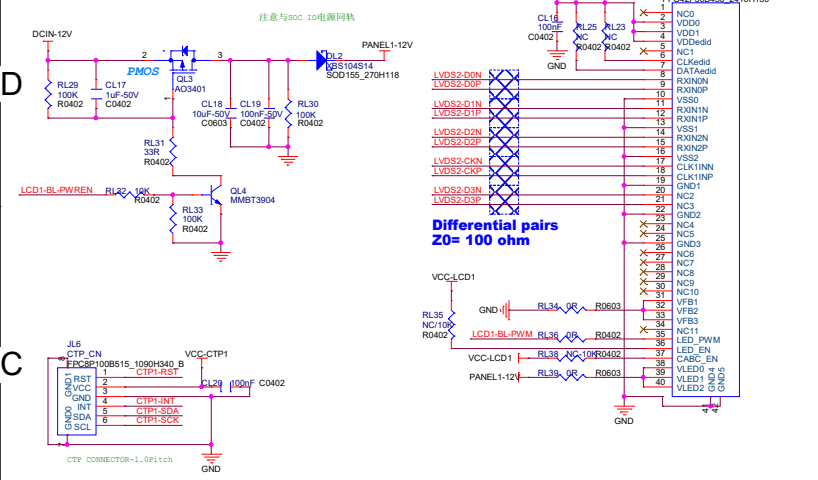

BTB CON For SerDes/Dual LVDS/RGB LCD

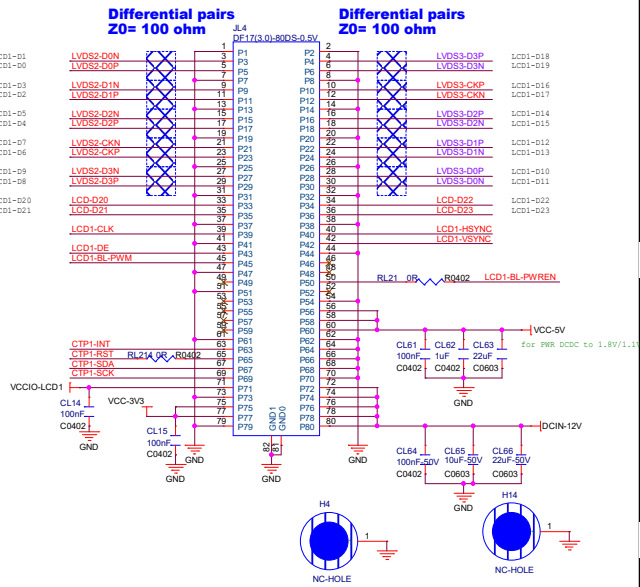

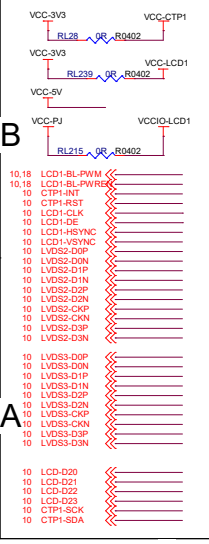

Note
ESD PROTECT COMPONENT PLEASE PLACE CLOSE TO CONNECTOR.

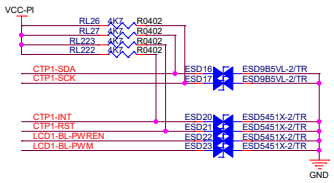

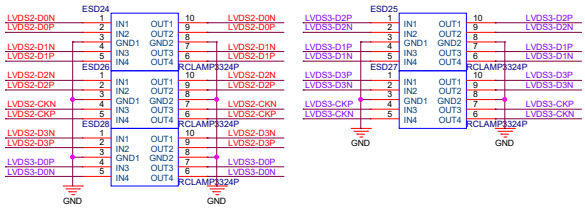

AllWinner Technology Co.,Ltd	
Design Name	A736_DEMO_DBOARD_V1_0
Size A3	Page Name 17 LCD1
Rev	V1.0
Date: Friday, December 20, 2024	Sheet 12 of 27

BTB CON For CAM SerDes

NCSI/MCSI

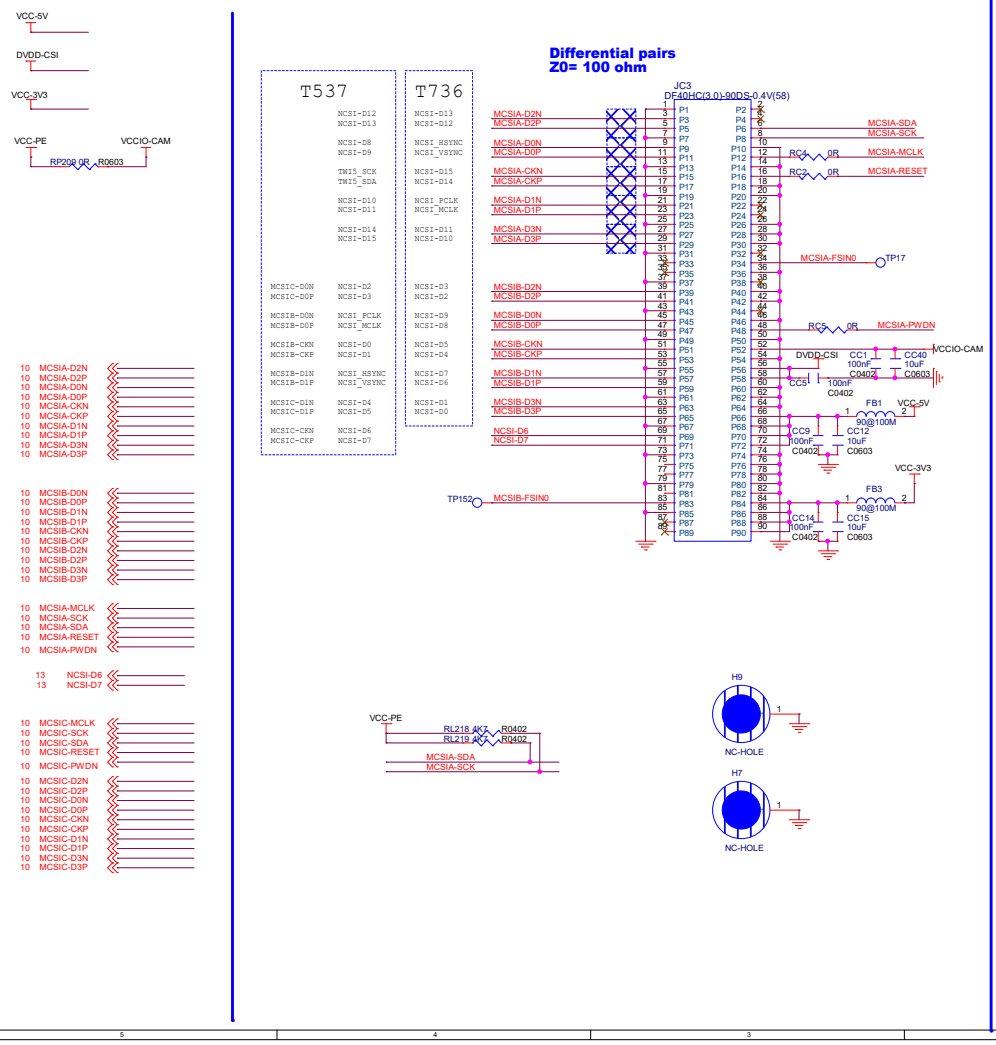

AllWinner Technology Co.,Ltd	
Design Name	A736_DEMO_DBOARD_V1_0
Size A3	Page Name 18 CAM
Rev	V1.0
Date:	Friday, December 20, 2024
Sheet	13 of 27

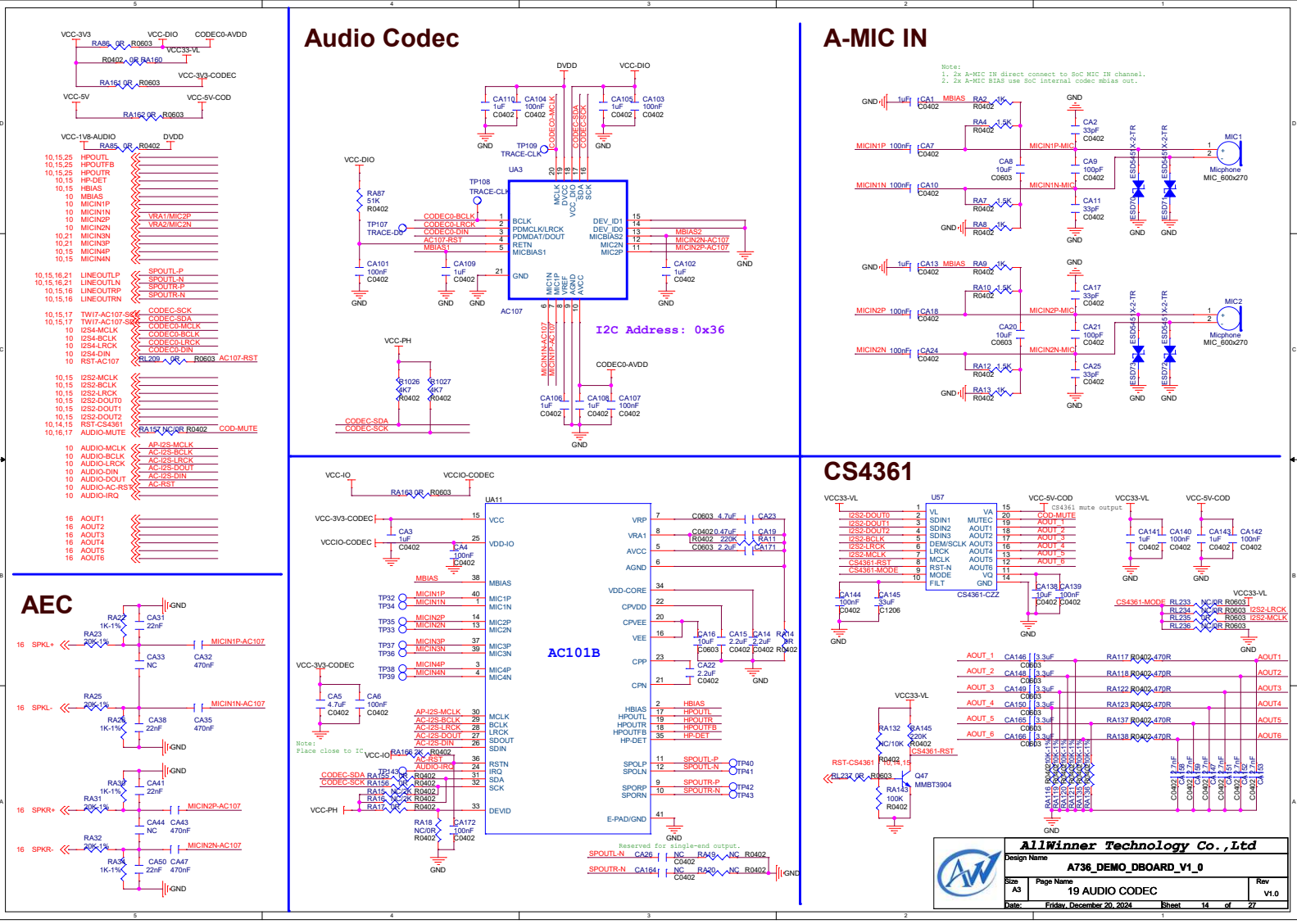
Audio Codec
A-MIC IN
AEC
CS4361
AC101B
I2C Address: 0x36
Note:
1. 2x A-MIC IN direct connect to SoC MIC IN channel.
2. 2x A-MIC BIAS use SoC internal codec mbias out.
Micphone
MIC_600x270
AllWinner Technology Co.,Ltd
Design Name
A736_DEMO_DBOARD_V1_0
Size
A3
Page Name
19 AUDIO CODEC
Rev
V1.0
Date:
Friday, December 20, 2024
Sheet
14
of
27

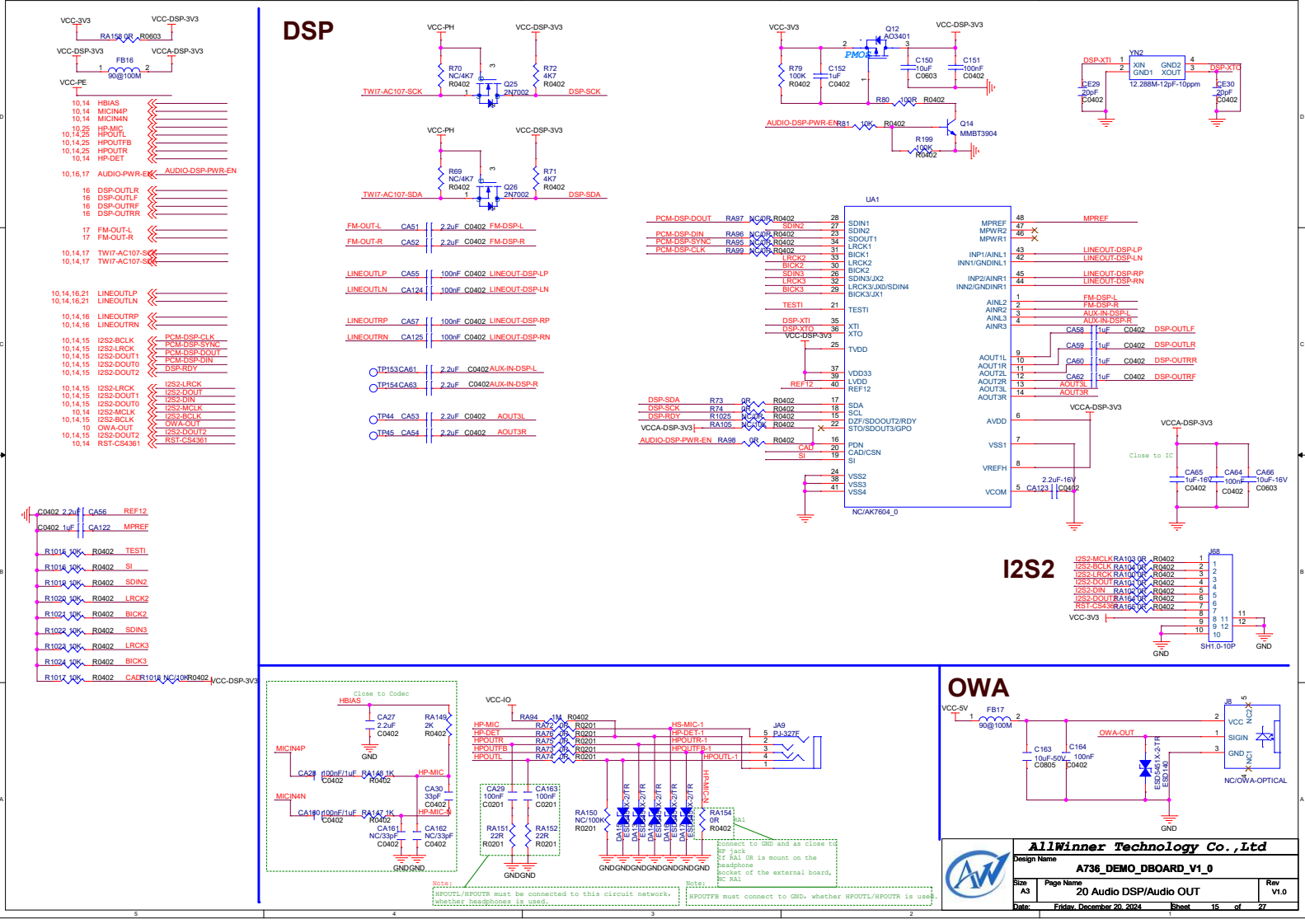
DSP
I2S2
VCC-3V3
VCC-DSP-3V3
VCCA-DSP-3V3
VCC-PE
RA158 0R R0603
FB16
90@100M
10,14 HBIAS
10,14 MICIN4P
10,14 MICIN4N
10,25 HP-MIC
10,14,25 HPOUTL
10,14,25 HPOUTFB
10,14,25 HPOUTR
10,14 HP-DET
10,16,17 AUDIO-PWR-EN
AUDIO-DSP-PWR-EN
16 DSP-OUTLR
16 DSP-OUTLF
16 DSP-OUTRF
16 DSP-OUTRR
17 FM-OUT-L
17 FM-OUT-R
10,14,17 TWI7-AC107-SCK
10,14,17 TWI7-AC107-SDA
10,14,16,21 LINEOUTLP
10,14,16,21 LINEOUTLN
10,14,16 LINEOUTRP
10,14,16 LINEOUTRN
10,14,15 I2S2-BCLK
10,14,15 I2S2-LRCK
10,14,15 I2S2-DOUT1
10,14,15 I2S2-DOUT0
10,14,15 I2S2-DOUT2
PCM-DSP-CLK
PCM-DSP-SYNC
PCM-DSP-DOUT
PCM-DSP-DIN
DSP-RDY
I2S2-LRCK
I2S2-DOUT
I2S2-DIN
I2S2-MCLK
I2S2-BCLK
OWA-OUT
I2S2-DOUT2
RST-CS4361
C0402 2.2uF CA56 REF12
C0402 1uF CA122 MPREF
R1018 10K R0402 TESTI
R1016 10K R0402 SI
R1015 10K R0402 SDIN2
R1020 10K R0402 LRCK2
R1021 10K R0402 BICK2
R1022 10K R0402 SDIN3
R1023 10K R0402 LRCK3
R1024 10K R0402 BICK3
R1017 10K R0402 CAD
R1019 NC/10K R0402
VCC-DSP-3V3
VCC-PH
R70 NC/4K7 R0402
Q25 2N7002
R72 4K7 R0402
TWI7-AC107-SCK
DSP-SCK
R69 NC/4K7 R0402
Q26 2N7002
R71 4K7 R0402
TWI7-AC107-SDA
DSP-SDA
FM-OUT-L CA51 2.2uF C0402 FM-DSP-L
FM-OUT-R CA52 2.2uF C0402 FM-DSP-R
LINEOUTLP CA55 100nF C0402 LINEOUT-DSP-LP
LINEOUTLN CA124 100nF C0402 LINEOUT-DSP-LN
LINEOUTRP CA57 100nF C0402 LINEOUT-DSP-RP
LINEOUTRN CA125 100nF C0402 LINEOUT-DSP-RN
TP153 CA61 2.2uF C0402 AUX-IN-DSP-L
TP154 CA63 2.2uF C0402 AUX-IN-DSP-R
TP44 CA53 2.2uF C0402 AOUT3L
TP45 CA54 2.2uF C0402 AOUT3R
Q12 AO3401
PMOS
R79 100K R0402
C152 1uF C0402
C150 10uF C0603
C151 100nF C0402
R80 100R R0402
AUDIO-DSP-PWR-EN R81 10K R0402
Q14 MMBT3904
R199 100K R0402
YN2
DSP-XTI
XIN GND1 GND2 XOUT
12.288M-12pF-10ppm
DSP-XTO
CE29 20pF C0402
CE30 20pF C0402
UA1
PCM-DSP-DOUT RA97 NC/0R R0402
PCM-DSP-DIN RA96 NC/0R R0402
PCM-DSP-SYNC RA95 NC/0R R0402
PCM-DSP-CLK RA99 NC/0R R0402
SDIN1 SDIN2 SDOUT1 LRCK1 BICK1 LRCK2 BICK2 SDIN3/JX2 LRCK3/JX0/SDIN4 BICK3/JX1 TESTI XTI XTO VDD33 LVDD REF12 SDA SCL DZF/SDOOUT2/RDY STO/SDOUT3/GPO PDN CAD/CSN SI VSS2 VSS3 VSS4
MPREF MPWR2 MPWR1 INP1/AINL1 INN1/GNDINL1 INP2/AINR1 INN2/GNDINR1 AINL2 AINR2 AINL3 AINR3 AOUT1L AOUT1R AOUT2L AOUT2R AOUT3L AOUT3R AVDD VSS1 VREFH VCOM
NC/AK7604_0
DSP-SDA R73 0R R0402
DSP-SCK R74 0R R0402
DSP-RDY R1025 NC/0R R0402
VCCA-DSP-3V3 RA105 NC/10K R0402
AUDIO-DSP-PWR-EN RA98 0R R0402
REF12
CAD
SI
MPREF
LINEOUT-DSP-LP
LINEOUT-DSP-LN
LINEOUT-DSP-RP
LINEOUT-DSP-RN
FM-DSP-L
FM-DSP-R
AUX-IN-DSP-L
AUX-IN-DSP-R
CA58 1uF C0402 DSP-OUTLF
CA59 1uF C0402 DSP-OUTLR
CA60 1uF C0402 DSP-OUTRR
CA62 1uF C0402 DSP-OUTRF
AOUT3L
AOUT3R
2.2uF-16V
CA123 C0402
Close to IC
CA65 1uF-16V C0402
CA64 100nF C0402
CA66 10uF-16V C0603
I2S2-MCLK RA103 0R R0402
I2S2-BCLK RA104 0R R0402
I2S2-LRCK RA100 0R R0402
I2S2-DOUT RA101 0R R0402
I2S2-DIN RA102 0R R0402
I2S2-DOUT RA164 0R R0402
RST-CS436 RA166 0R R0402
J68
SH1.0-10P
GND
Close to Codec
HBIAS
CA27 2.2uF C0402
RA149 2K R0402
MICIN4P
CA28 100nF/1uF C0402
RA148 1K R0402
HP-MIC
CA30 33pF C0402
MICIN4N
CA180 100nF/1uF C0402
RA147 1K R0402
HP-MIC-N
CA161 NC/33pF C0402
CA162 NC/33pF C0402
VCC-IO
RA94 1M R0402
HP-MIC RA72 0R R0201
HP-DET RA76 0R R0201
HPOUTR RA75 0R R0201
HPOUTFB RA73 0R R0201
HPOUTL RA74 0R R0201
HS-MIC-1
HP-DET-1
HPOUTR-1
HPOUTFB-1
HPOUTL-1
JA9 PJ-327F
HP-MIC-N
CA29 100nF C0201
CA163 100nF C0201
RA151 22R R0201
RA152 22R R0201
RA150 NC/100K R0201
DA148 ESD5451X-2/TR
RA154 0R R0402
RA1
Connect to GND and as close as HP jack
If RA1 OR is mount on the headphone socket of the external board, NC RA1
Note: HPOUTL/HPOUTR must be connected to this circuit network, whether headphones is used.
Note: HPOUTFB must connect to GND. whether HPOUTL/HPOUTR is used.
OWA
VCC-5V
FB17
90@100M
C163 10uF-50V C0805
C164 100nF C0402
OWA-OUT
ESD5451X-2/TR
ESD9140
J8
VCC SIGIN GND NC2 NC1
NC/OWA-OPTICAL
AllWinner Technology Co.,Ltd
Design Name
A736_DEMO_DBOARD_V1_0
Size A3
Page Name
20 Audio DSP/Audio OUT
Rev V1.0
Date: Friday, December 20, 2024
Sheet 15 of 27

Audio AMP

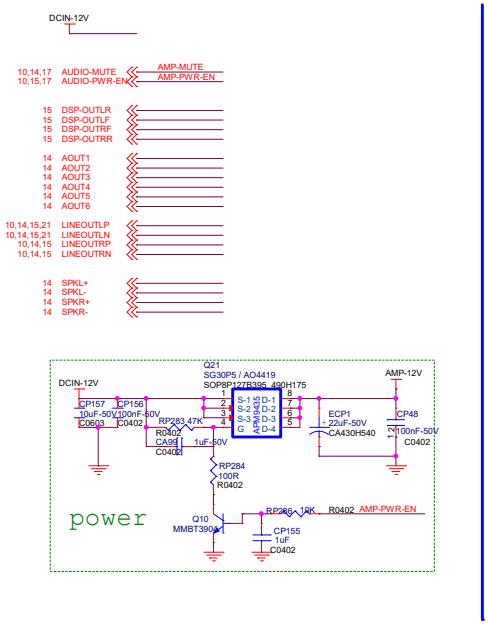

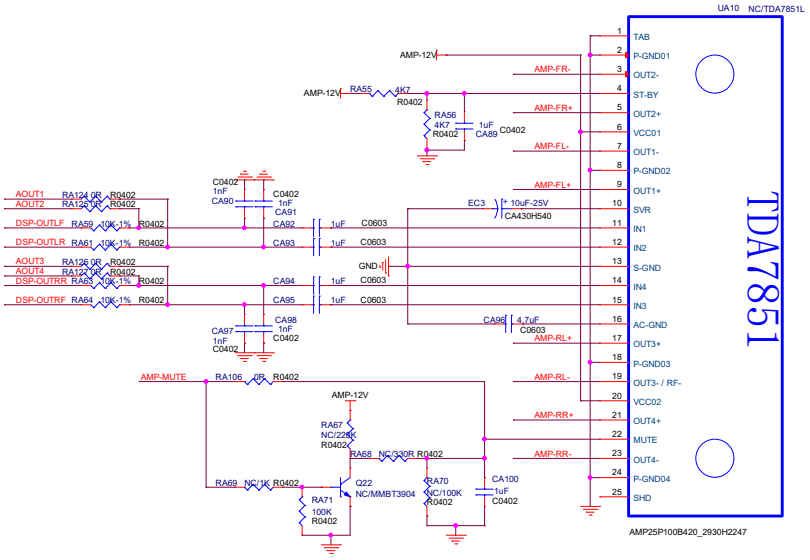

Audio AMP

Reserved for Debug

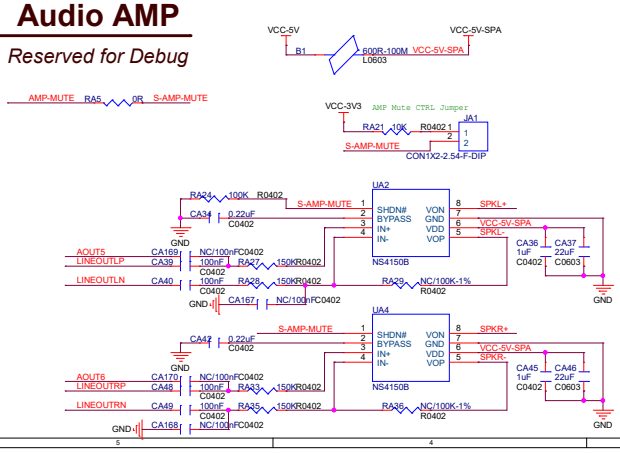

AudioOUT CON

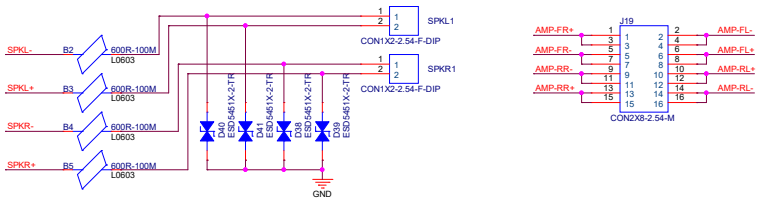

AllWinner Technology Co.,Ltd		
Design Name: A736_DEMO_DBOARD_V1_0		
Size: A3	Page Name: 21 Audio AMP	Rev: V1.0
Date: Friday, December 20, 2024	Sheet 16 of 27	

AM/FM Tuner

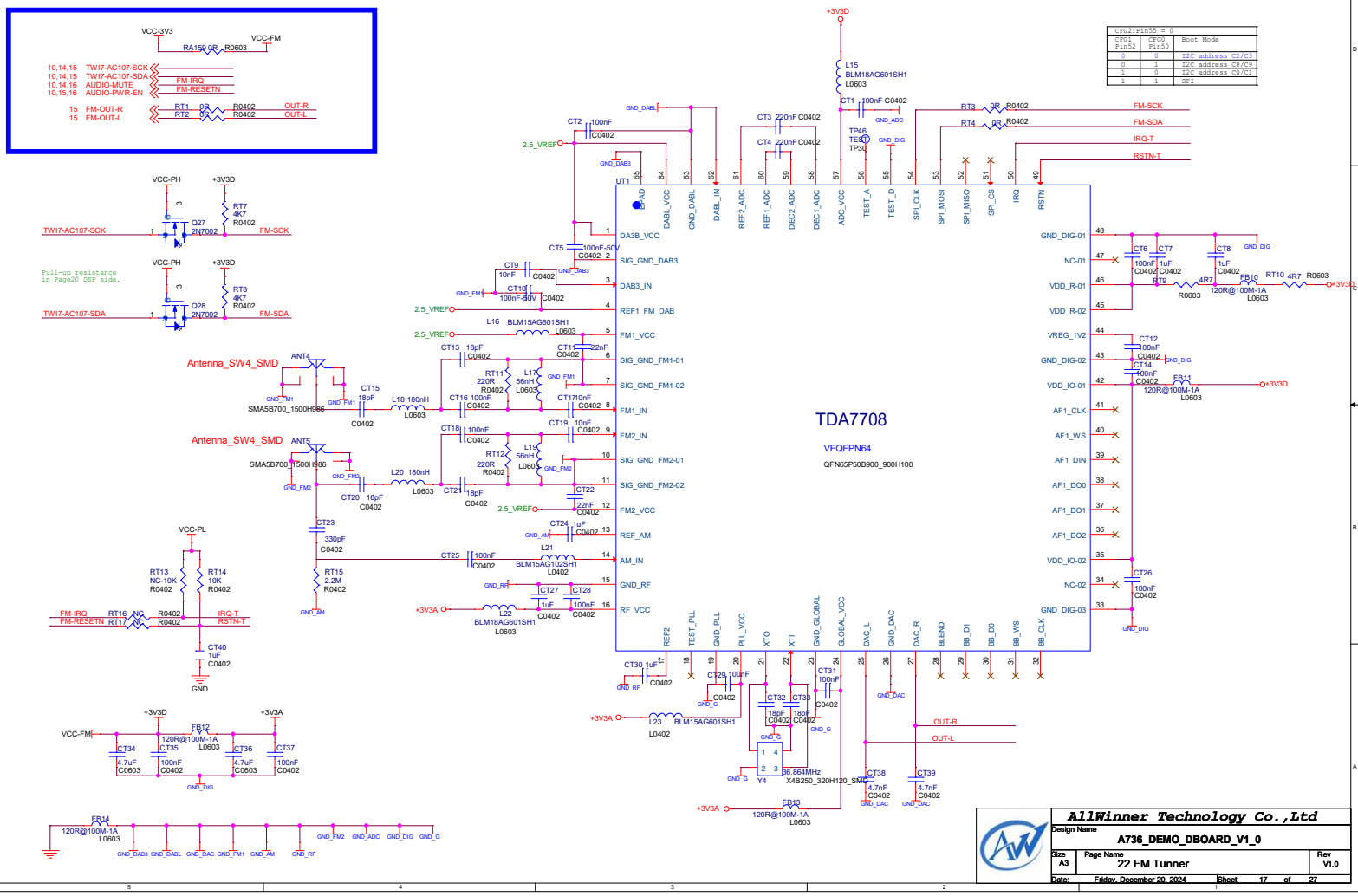
TDA7708
VFQFPN64
QFN65P50B900_900H100
Antenna_SW4_SMD
Antenna_SW4_SMD
Pull-up resistance in Page20 DSP side.
CFG2:Pin55 = 0
CFG1 Pin52 | CFG0 Pin50 | Boot Mode
0 | 0 | I2C address C2/C3
0 | 1 | I2C address C8/C9
1 | 0 | I2C address C0/C1
1 | 1 | SPI
AllWinner Technology Co.,Ltd
Design Name
A736_DEMO_DBOARD_V1_0
Size A3
Page Name 22 FM Tunner
Rev V1.0
Date: Friday, December 20, 2024
Sheet 17 of 27

eDP LCD

Differential pairs
Z0= 100 ohm

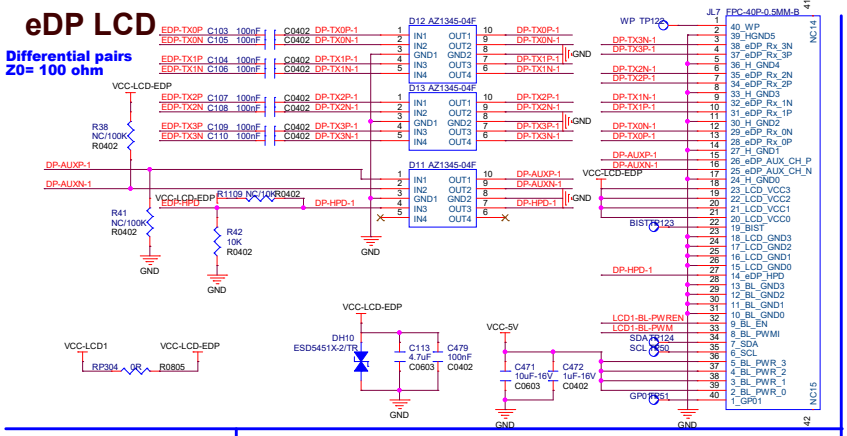

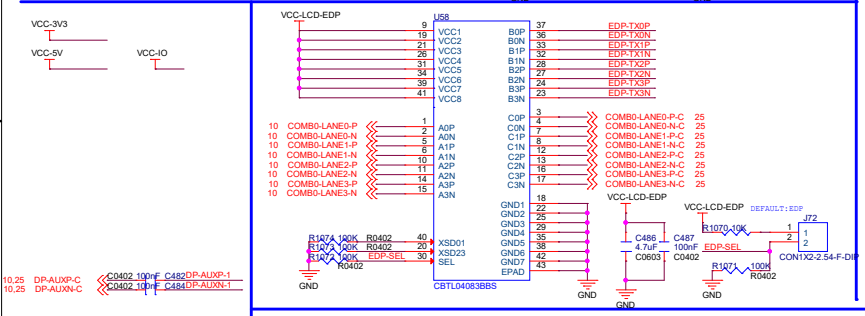

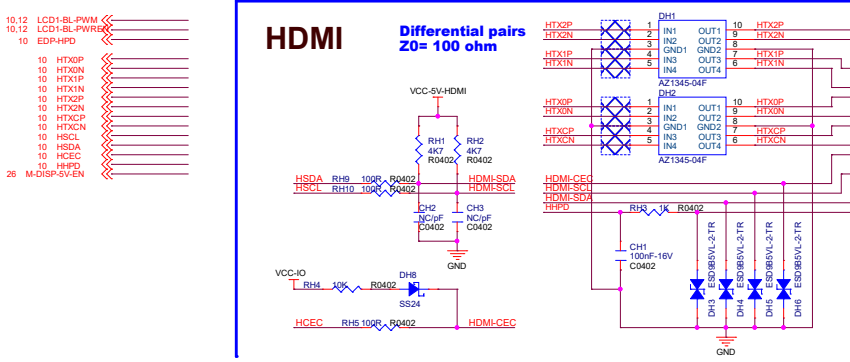

HDMI

Differential pairs
Z0= 100 ohm

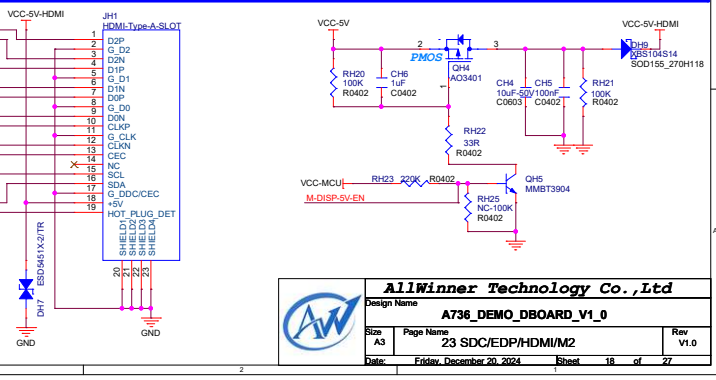

AllWinner Technology Co.,Ltd		
Design Name: A736_DEMO_DBOARD_V1_0		
Size: A3	Page Name: 23 SDC/EDP/HDMI/M2	Rev: V1.0
Date: Friday, December 20, 2024	Sheet 18 of 27	

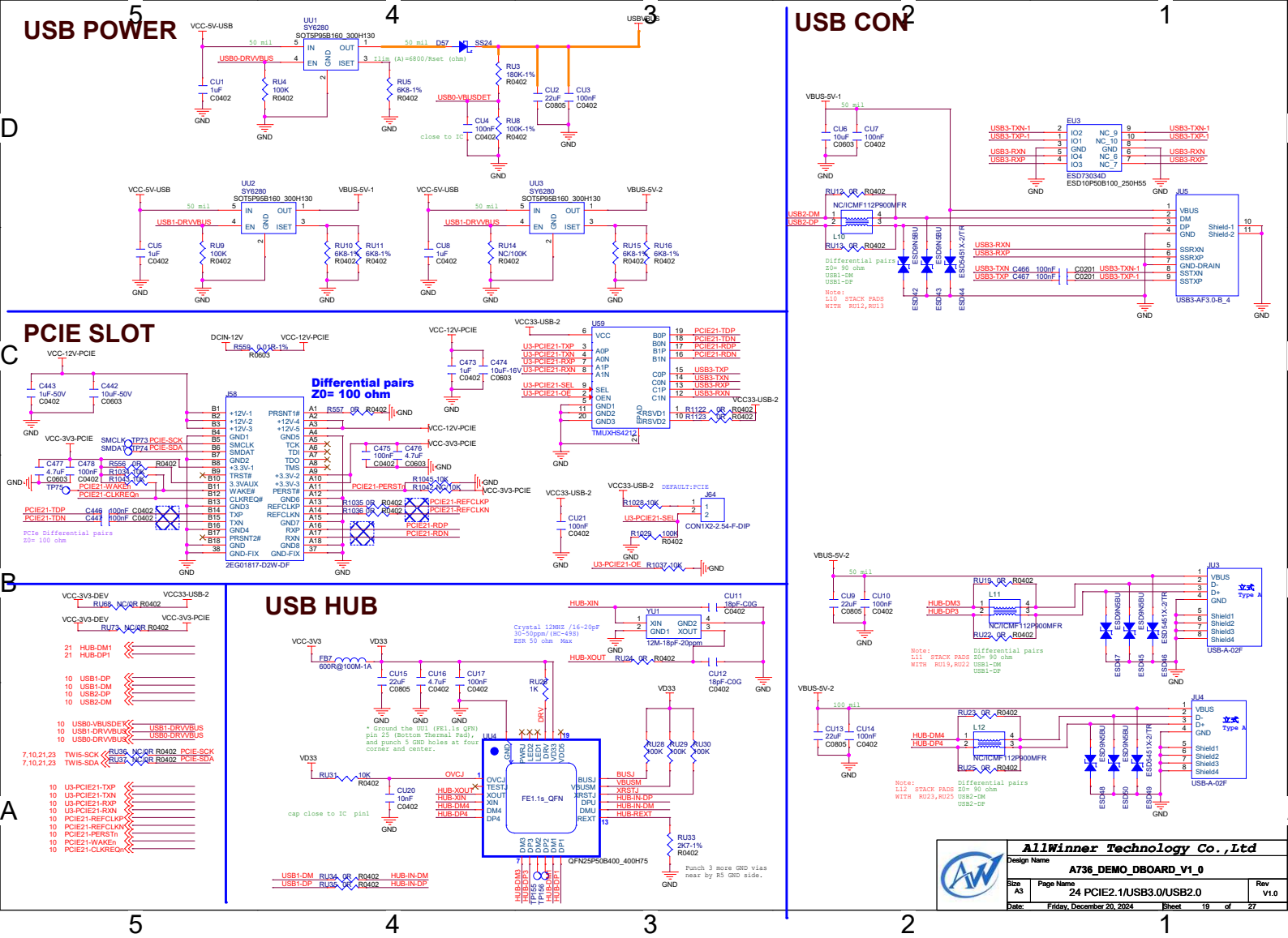
USB POWER
USB CON
PCIE SLOT
Differential pairs
Z0= 100 ohm
USB HUB
VCC-5V-USB
VCC-12V-PCIE
VCC-3V3-PCIE
VCC-3V3-DEV
VCC33-USB-2
VBUS-5V-1
VBUS-5V-2
GND
J58
2EG01817-D2W-DF
U59
TMUX-HS4212
JU5
USB3-AF3.0-B_4
JU3
USB-A-02F
JU4
USB-A-02F
J64
CON1X2-2.54-F-DIP
FE1.1s_QFN
QFN25P50B400_400H75
Punch 3 more GND vias near by R5 GND side.
AllWinner Technology Co.,Ltd
Design Name
A736_DEMO_DBOARD_V1_0
Size
A3
Page Name
24 PCIE2.1/USB3.0/USB2.0
Rev
V1.0
Date:
Friday, December 20, 2024
Sheet
19
of
27

RGMII

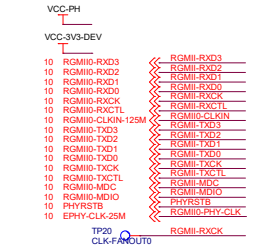

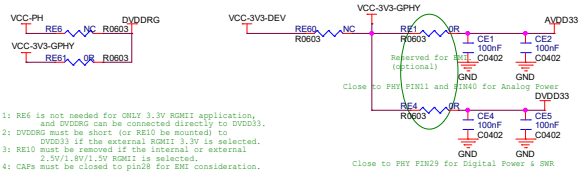

Note 1: RE6 is not needed for ONLY 3.3V RGMII application, and DVDDRG can be connected directly to DVDD33.
Note 2: DVDDRG must be short (or RE10 be mounted) to DVDD33 if the external RGMII 3.3V is selected.
Note 3: RE10 must be removed if the internal or external 2.5V/1.8V/1.5V RGMII is selected.
Note 4: CAPs must be closed to pin28 for EMI consideration.

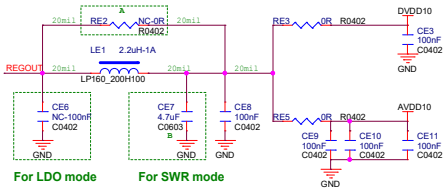

Note 1: Bypass CAPs close to PHY DVDD10/AVDD10 power pins.
Note 2: Any inductance or bead except L1 is not allowed on the path from REGOUT to DVDD10/AVDD10.
Note 3: A is reserved to change the DVDD10/AVDD10 supply source to LDO mode (RTL8211FD).
Note 4: No design change of PCB model is needed if A is reserved. If only RTL8211FD used for particular PCB model, directly short REGOUT to DVDD10/AVDD10.
Note 5: If RTL8211FI is selected, the B should be replaced as 10uF X7R capacitor for industrial grade application. Please refer to the datasheet for other industrial grade information.

Ethernet PHY

RGMII

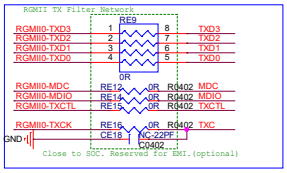

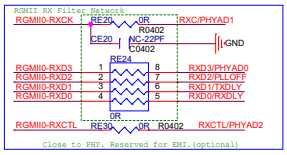

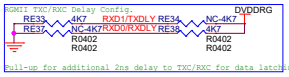

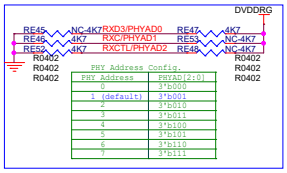

PHY Address Config.

PHY Address	PHYAD[2:0]
0	3'b000
1 (default)	3'b001
2	3'b010
3	3'b011
4	3'b100
5	3'b101
6	3'b110
7	3'b111

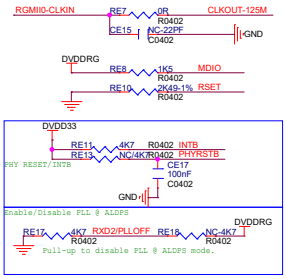

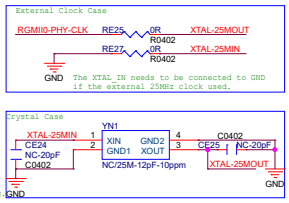

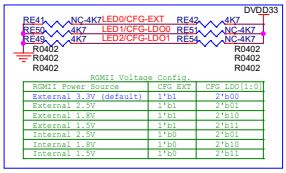

RGMII Voltage Config.

RGMII Power Source	CFG EXT	CFG LDO[1:0]
External 3.3V (default)	1'b1	2'b00
External 2.5V	1'b1	2'b01
External 1.8V	1'b1	2'b10
External 1.5V	1'b1	2'b11
Internal 2.5V	1'b0	2'b01
Internal 1.8V	1'b0	2'b10
Internal 1.5V	1'b0	2'b11

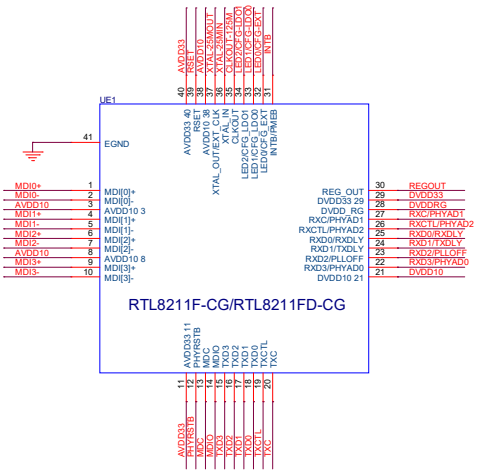

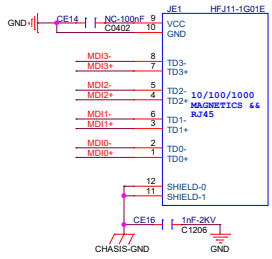

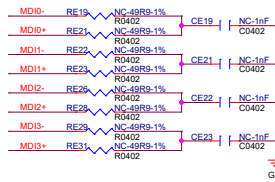

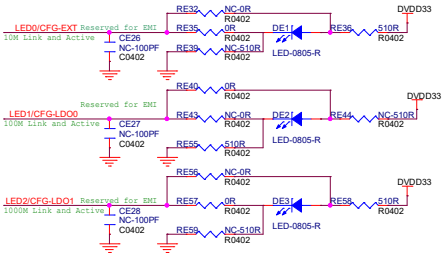

LEDs Configuration

LED Resistances Setting
CFG-EXT=1'b1
CFG-EXT=1'b0
CFG-LDO0=1'b1
CFG-LDO0=1'b0
CFG-LDO1=1'b1
CFG-LDO1=1'b0

LED Resistances Setting
RE32(NC), RE35, RE36, RE39(NC)
RE32, RE35(NC), RE36(NC), RE39
RE40(NC), RE43, RE44, RE45(NC)
RE40, RE43(NC), RE44(NC), RE45
RE56(NC), RE57, RE58, RE59(NC)
RE56(NC), RE57(NC), RE58(NC), RE59

AllWinner Technology Co.,Ltd

Design Name: A736_DEMO_DBOARD_V1_0

Size	Page Name	Rev
A3	25 ETHERNET	V1.0

Date: Friday, December 20, 2024 Sheet 20 of 27

4G Module

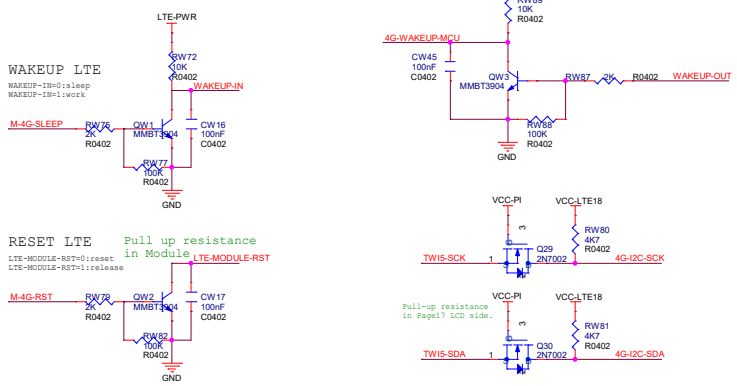

SIM Card

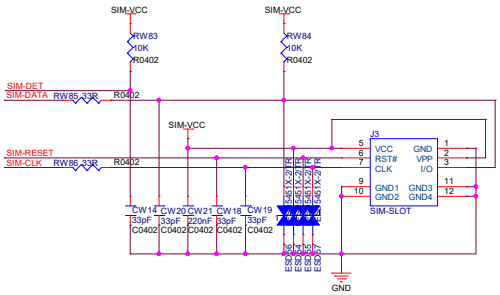

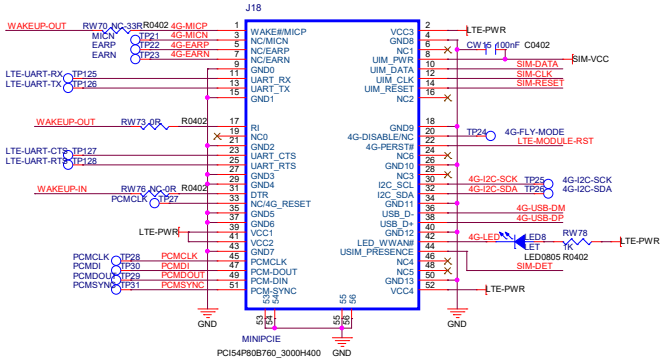

Pin Name	Pin No.
WAKE#	1
RESERVED	3
RESERVED	5
RESERVED	7
GND	9
UART_RX	11
UART_TX	13
GND	15
RI	17
RESERVED	19
GND	21
UART_CTS	23
UART_RTS	25
GND	27
GND	29
DTR	31
RESERVED	33
GND	35
GND	37
VCC_3V3	39
VCC_3V3	41
GND	43
PCM_CLK	45
PCM_DOUT	47
PCM_DI	49
PCM_SYNC	51

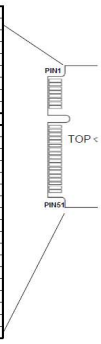

Pin No.	Pin Name
2	VCC_3V3
4	GND
6	NC
8	USIM_VDD
10	USIM_DATA
12	USIM_CLK
14	USIM_RST
16	RESERVED
18	GND
20	W_DISABLE#
22	PERST#
24	RESERVED
26	GND
28	NC
30	I2C_SCL
32	I2C_SDA
34	GND
36	USB_DM
38	USB_DP
40	GND
42	LED_WWAN#
44	USIM_PRESENCE
46	RESERVED
48	NC
50	GND
52	VCC_3V3

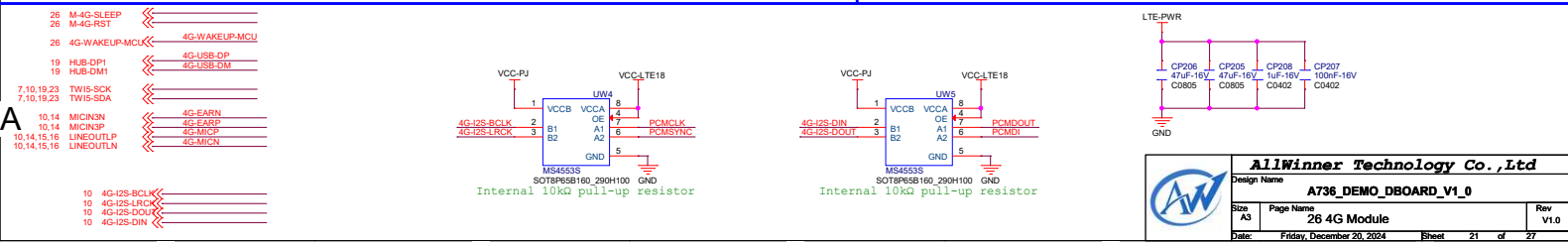

Design Name	A736_DEMO_DBOARD_V1_0
Size	A3
Page Name	26 4G Module
Rev	V1.0
Date:	Friday, December 20, 2024
Sheet	21 of 27

AllWinner Technology Co.,Ltd

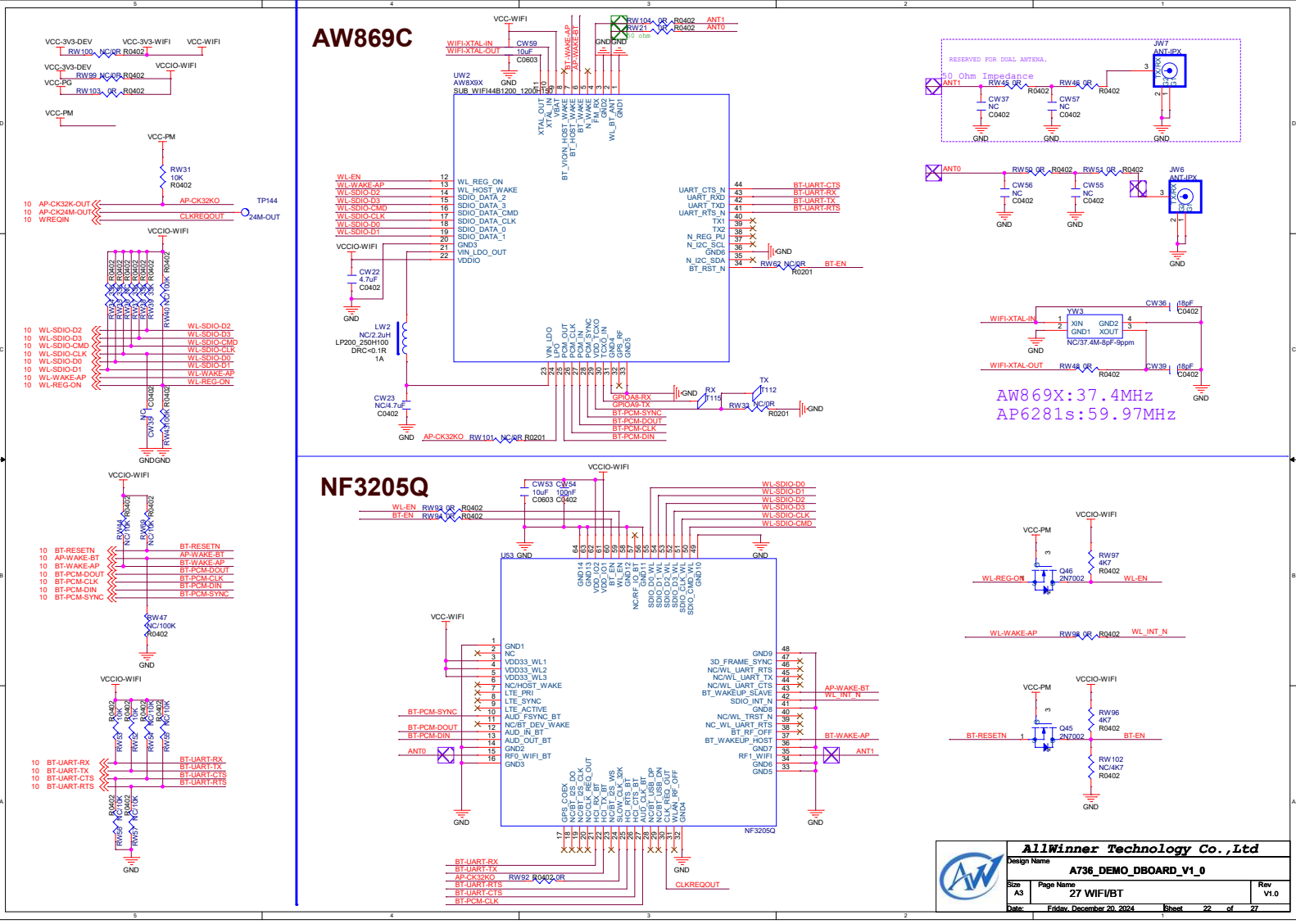
AW869C
NF3205Q
VCC-3V3-DEV
VCC-3V3-WIFI
VCC-WIFI
VCCIO-WIFI
VCC-PG
VCC-PM
RW31 10K R0402
AP-CK32KO
AP-CK24M-OUT
WREQIN
CLKREQOUT
TP144
24M-OUT
WL-SDIO-D2
WL-SDIO-D3
WL-SDIO-CMD
WL-SDIO-CLK
WL-SDIO-D0
WL-SDIO-D1
WL-WAKE-AP
WL-REG-ON
BT-RESETN
AP-WAKE-BT
BT-WAKE-AP
BT-PCM-DOUT
BT-PCM-CLK
BT-PCM-DIN
BT-PCM-SYNC
BT-UART-RX
BT-UART-TX
BT-UART-CTS
BT-UART-RTS
WIFI-XTAL-IN
WIFI-XTAL-OUT
UW2 AW8X9X SUB_WIFI44B1200_1200
WL_REG_ON
WL_HOST_WAKE
SDIO_DATA_2
SDIO_DATA_3
SDIO_DATA_CMD
SDIO_DATA_CLK
SDIO_DATA_0
SDIO_DATA_1
GND3
VIN_LDO_OUT
VDDIO
UART_CTS_N
UART_RXD
UART_TXD
UART_RTS_N
TX1
TX2
N_REG_PU
N_I2C_SCL
GND6
N_I2C_SDA
BT_RST_N
GPIOA8-RX
GPIOA9-TX
BT-PCM-SYNC
BT-PCM-DOUT
BT-PCM-CLK
BT-PCM-DIN
AP-CK32KO RW101 NC/0R R0201
U53 GND
WL-SDIO-D0
WL-SDIO-D1
WL-SDIO-D2
WL-SDIO-D3
WL-SDIO-CLK
WL-SDIO-CMD
GND1
NC
VDD33_WL1
VDD33_WL2
VDD33_WL3
NC/HOST_WAKE
LTE_PRI
LTE_SYNC
LTE_ACTIVE
AUD_FSYNC_BT
NC/BT_DEV_WAKE
AUD_IN_BT
AUD_OUT_BT
GND2
RF0_WIFI_BT
GND3
GND9
3D_FRAME_SYNC
NC/WL_UART_RTS
NC/WL_UART_TX
NC/WL_UART_CTS
BT_WAKEUP_SLAVE
SDIO_INT_N
GND8
NC/WL_TRST_N
NC_WL_UART_RTS
BT_RF_OFF
BT_WAKEUP_HOST
GND7
RF1_WIFI
GND6
GND5
NF3205Q
BT-UART-RX
AP-CK32KO RW92 R0402 0R
BT-UART-TX
BT-UART-CTS
BT-PCM-CLK
CLKREQOUT
WL-REG-ON
WL-EN
WL-WAKE-AP
WL_INT_N
BT-EN
BT-RESETN
ANT1
ANT0
JW7 ANT-IPX
JW6 ANT-IPX
RESERVED FOR DUAL ANTENA.
50 Ohm Impedance
YW3 XIN GND1 GND2 XOUT NC/37.4M-8pF-9ppm
AW869X:37.4MHz
AP6281s:59.97MHz
Q46 2N7002
Q45 2N7002
RW97 4K7 R0402
RW96 4K7 R0402
RW 102 NC/4K7 R0402
AllWinner Technology Co.,Ltd
Design Name
A736_DEMO_DBOARD_V1_0
Size A3
Page Name 27 WIFI/BT
Rev V1.0
Date: Friday, December 20, 2024
Sheet 22 of 27

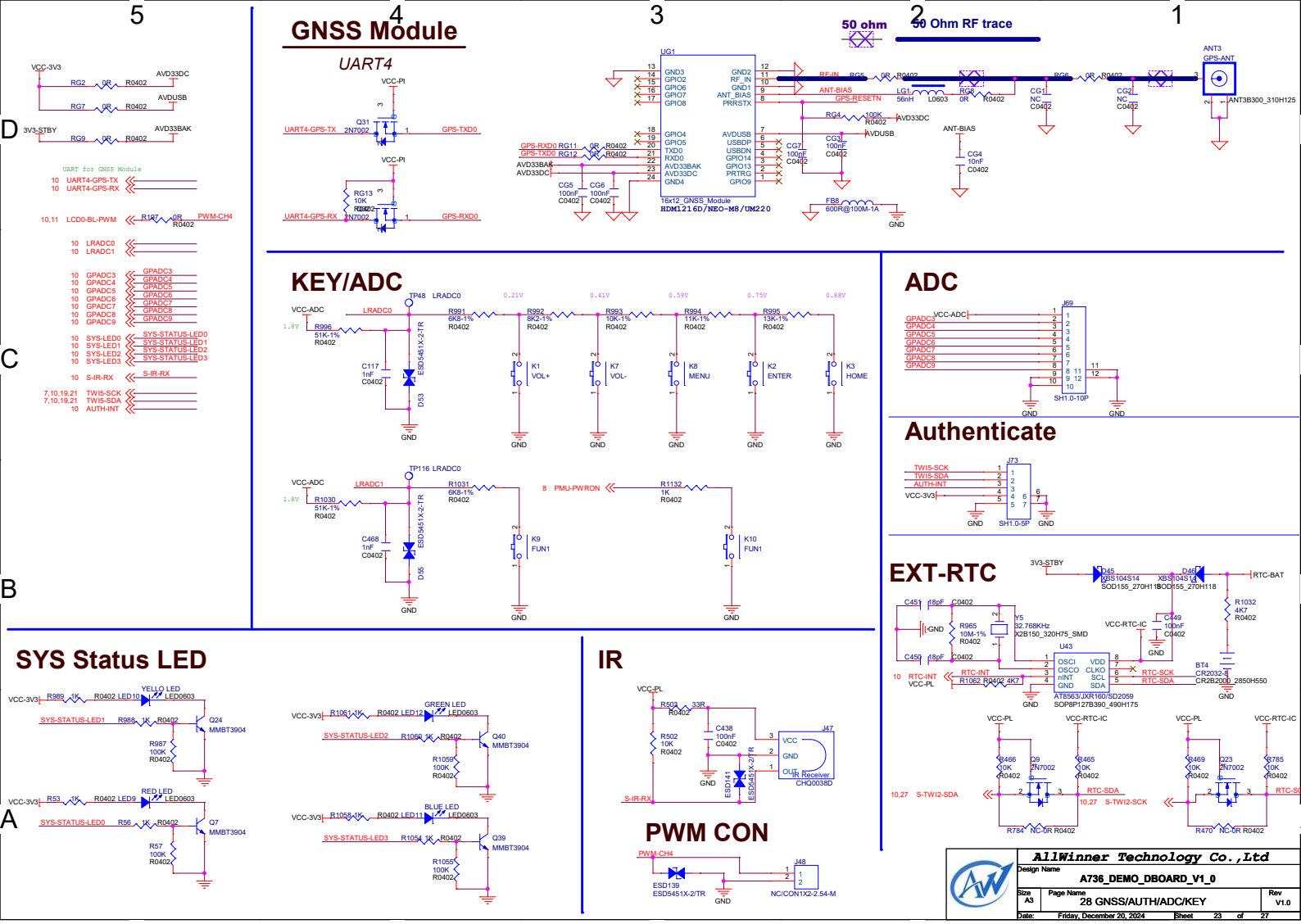
GNSS Module
UART4
UG1
16x12_GNSS_Module
HDM1216D/NEO-M8/UM220
50 ohm
50 Ohm RF trace
ANT3
GPS-ANT
ANT3B300_310H125
ANT-BIAS
KEY/ADC
K1 VOL+
K7 VOL-
K8 MENU
K2 ENTER
K3 HOME
K9 FUN1
K10 FUN1
ADC
J69
SH1.0-10P
Authenticate
J73
SH1.0-5P
EXT-RTC
U43
AT8563/JXR160/SD2059
SOP8P127B390_490H175
Y5
32.768KHz
X2B150_320H75_SMD
BT4
CR2032-8
CR2B2000_2850H550
SYS Status LED
IR
J47
IR Receiver
CHQ0038D
PWM CON
J48
NC/CON1X2-2.54-M
AllWinner Technology Co.,Ltd
Design Name
A736_DEMO_DBOARD_V1_0
Size
A3
Page Name
28 GNSS/AUTH/ADC/KEY
Rev
V1.0
Date:
Friday, December 20, 2024
Sheet
23
of
27

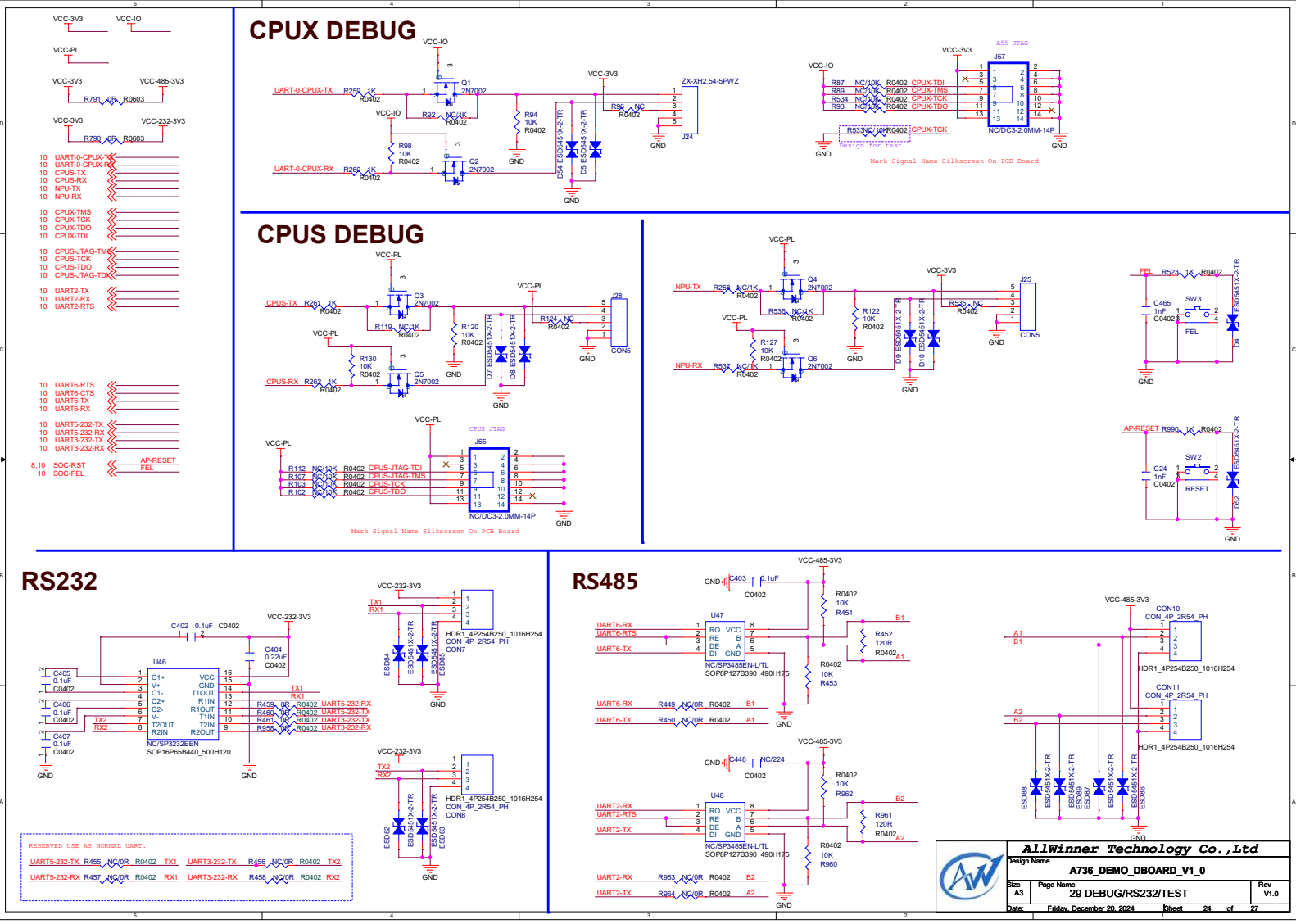
CPUX DEBUG
CPUS DEBUG
RS232
RS485
VCC-3V3
VCC-IO
VCC-PL
VCC-485-3V3
VCC-232-3V3
UART-0-CPUX-TX
UART-0-CPUX-RX
CPUS-TX
CPUS-RX
NPU-TX
NPU-RX
CPUX-TMS
CPUX-TCK
CPUX-TDO
CPUX-TDI
CPUS-JTAG-TMS
CPUS-TCK
CPUS-TDO
CPUS-JTAG-TDI
UART2-TX
UART2-RX
UART2-RTS
UART6-RTS
UART6-CTS
UART6-TX
UART6-RX
UART5-232-TX
UART5-232-RX
UART3-232-TX
UART3-232-RX
AP-RESET
FEL
SOC-RST
SOC-FEL
ZX-XH2.54-5PWZ
J24
J57
A55 JTAG
NC/DC3-2.0MM-14P
Design for test
Mark Signal Name Silkscreen On PCB Board
J28
CON5
J25
J65
CPUS JTAG
SW3
SW2
RESET
U46
NC/SP3232EEN
SOP16P65B440_500H120
HDR1_4P254B250_1016H254
CON_4P_2R54_PH
CON7
CON8
RESERVED USE AS NORMAL UART.
UART5-232-TX R455 NC/0R R0402 TX1
UART5-232-RX R457 NC/0R R0402 RX1
UART3-232-TX R456 NC/0R R0402 TX2
UART3-232-RX R458 NC/0R R0402 RX2
U47
U48
NC/SP3485EN-L/TL
SOP8P127B390_490H175
CON10
CON11
AllWinner Technology Co.,Ltd
Design Name
A736_DEMO_DBOARD_V1_0
Size A3
Page Name 29 DEBUG/RS232/TEST
Rev V1.0
Date: Friday, December 20, 2024
Sheet 24 of 27

TYPEC

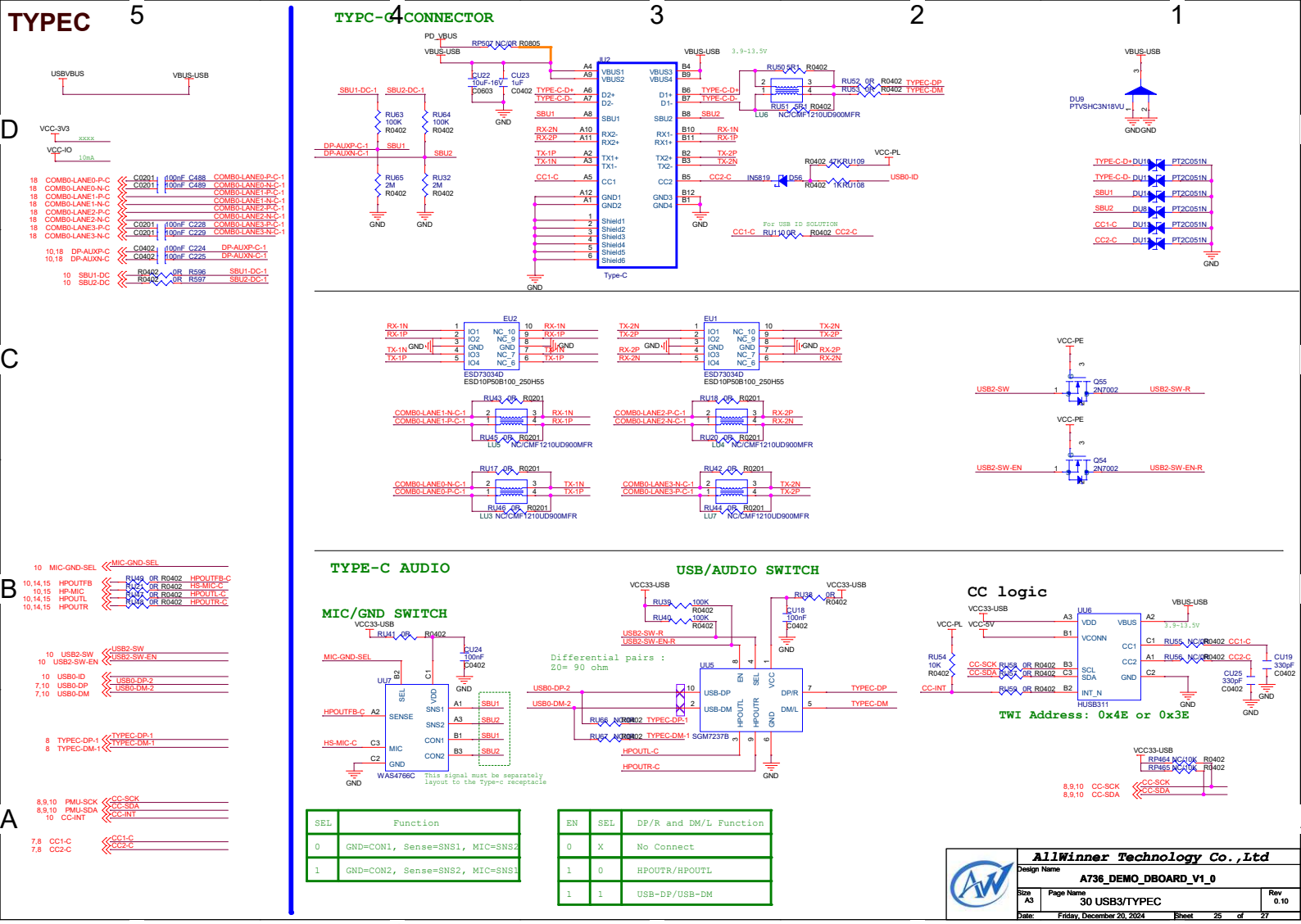

SEL	Function
0	GND=CON1, Sense=SNS1, MIC=SNS2
1	GND=CON2, Sense=SNS2, MIC=SNS1

EN	SEL	DP/R and DM/L Function
0	X	No Connect
1	0	HPOUTR/HPOUTL
1	1	USB-DP/USB-DM

AllWinner Technology Co.,Ltd

Design Name: A736_DEMO_DBOARD_V1_0

Size: A3 | Page Name: 30 USB3/TYPEC | Rev: 0.10

Date: Friday, December 20, 2024 | Sheet 25 of 27

EXT-MCU

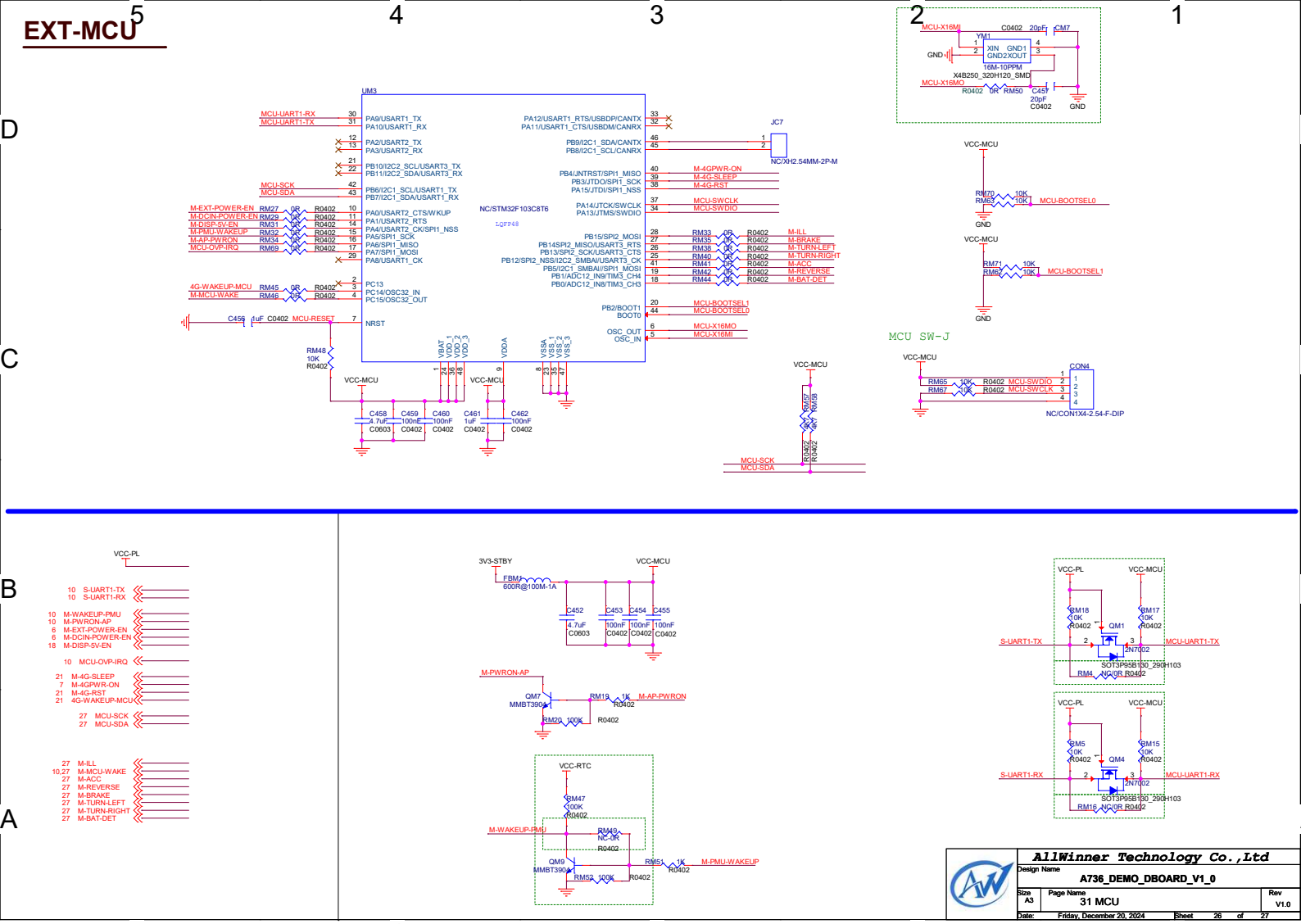

AllWinner Technology Co.,Ltd	
Design Name	A736_DEMO_DBOARD_V1_0
Size A3	Page Name 31 MCU
Rev	V1.0
Date: Friday, December 20, 2024	Sheet 26 of 27

EXT-SIG DET

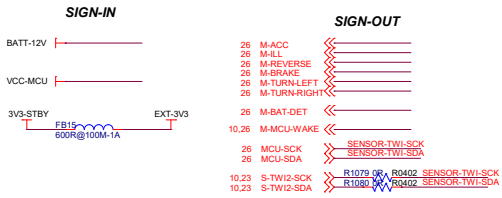

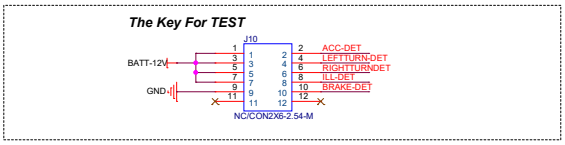

3D G-SENSOR

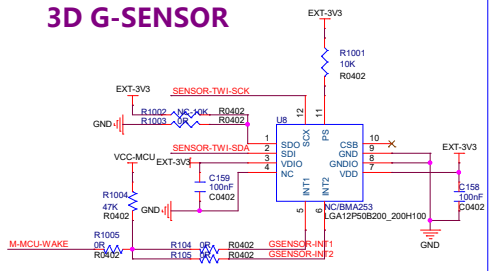

7Bits I2C Address: 0x18

MARK POINT HOLE

PLEASE ADD MARK POINT FOR SMT

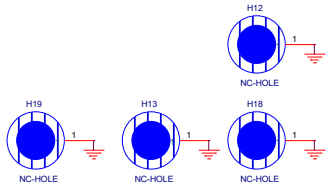

Battery Voltage Detect

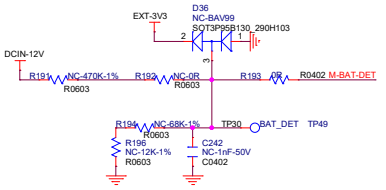

车机电压保护测试要求(除24V外)。
正常电压B+=14V, DET=2.036V
1:当B+电压上升到18V±0.5时, DET=2.618V±0.073, MCU会关机。
2:当B+电压下降到9V±0.5时, DET=1.309V±0.073, MCU会 active mute。
3:当B+电压下降到5.8V±0.5时, DET=0.844V±0.073, MCU会关机。

Brake Detect

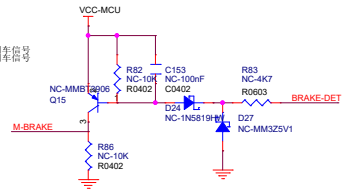

TURN Light

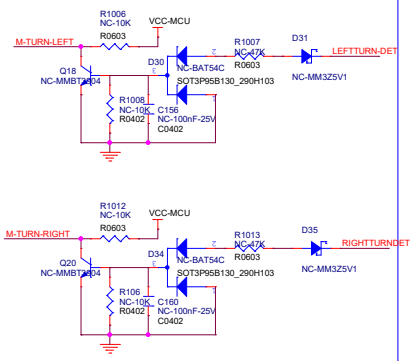

ACC Detect

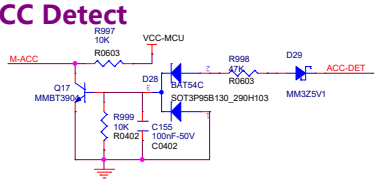

REVERSE Detect

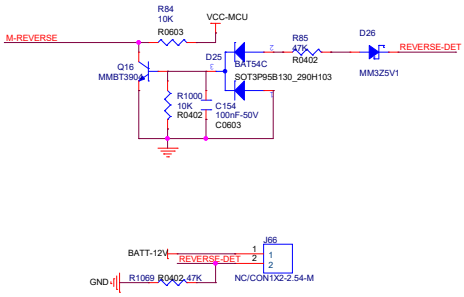

ILL IN Detect

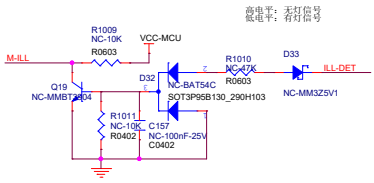

AllWinner Technology Co.,Ltd			
Design Name	A736_DEMO_DBOARD_V1_0		
Size A3	Page Name 32 EXT-SIG Detect		Rev V1.0
Date: Friday, December 20, 2024	Sheet 27 of 27		