A733

Octa-core AI Tablet Processor

Overview

The A733 family is an octa-core tablet processor targeted for mid-to-high-end tablets and interactive display applications. It can also be applied in tablet PCs and ARM PCs.

High Performance

It integrates dual-core ARM Cortex™-A76+hexa-core ARM Cortex™-A55, IMG BXM-4-64 MC1, 3 Tops NPU, LPDDR4/LPDDR4x/LPDDR5 to ensure rapid response and smooth operation for daily applications like online video, web browsing, 3D games, and so on.

Rich Peripheral Interfaces

It supports rich peripheral interfaces including high-speed interfaces such as PCIe3.0 DM, USB3.1 GEN2 DRD, GMAC, video input interfaces such as MIPI CSI and Parallel CSI, and video output interfaces such as HDMI, RGB, LVDS, MIPI-DSI, eDP1.4b/DP, and E-ink, greatly facilitating product expansion.

Powerful Multi-media Capacity

It supports independent/synchronous output on dual display, H.265/VP9/AVS2 video decoding up to 8K@24fps, H.265/H.264 video encoding up to 4K@30fps, and ISP Allwinner SmartColor5.0 display enhancement technology to provide excellent video experience for users. Besides, the digital audio interfaces like I2S, DMIC, and OWA enable this chip family to meet the requirements of mainstream audio recognition solutions.

Ordering Information

Features \ Devices	A733MX-HN3	A733MX-N3X	A733MX-1XX
NPU	Support	Support	Not support
HDMI2.0	Support	Not support	Not support
BK	6 channel	6 channel	4 channel

Features

CPU	• Dual-core ARM Cortex™-A76+Hexa-core ARM Cortex™-A55, up to 2.0 GHz - A76: L1 per core 64 KB I-Cache and 64 KB D-Cache， L2 per core 256 KB - A55: L1 per core 32 KB I-Cache and 32 KB D-Cache， L2 per core 128 KB - Shared 1 MB L3 Cache • Single-core RISC-V E902, up to 200 MHz
GPU	• IMG BXM-4-64 MC1
NPU	• NPU, up to 3 Tops
Memory& Storage	• External 32-bit LPDDR4/LPDDR4x/LPDDR5, up to 16 GB • 192 KB SRAM +512 KB shared SRAM • SD 2.0/3.0, eMMC 5.0/5.1, and SDIO 2.0/3.0 • 1x 2-lane UFS 3.0 • 1x 8-bit RAW NAND Flash • 1x SPI Flash, supporting up to Octal-I/O SPI mode and DTR mode
Graphics & Display	• DE, supporting independent/synchronous output on the dual display - Main display: up to 4K@60fps VI/UI output, 4K VI input or 4K UI input - Secondary display: up to 2K VI/UI input • DI, up to 1920x1080@60fps • G2D, up to 7680x7680 pixel layer size • E-ink, up to 2560x1650@106fps
Image	• ISP - Supports multiple sensors input - Performance of one sensor: linear 8M@60fps online, 2f-wdr 8M@30fps online, linear 24M@25fps offline, and 2f-wdr 8M@30fps offline - Supports multiple data stream out - Supports ISP adjustment on the PC (online/offline/remote debugging) • ENCPP, up to 8K x 8K resolution
Video Engine	Video decoder • H.265 MP, VP9, AVS2, supporting up to 8K@24fps • H.264 BL/MP/HP, supporting up to 4K@30fps • H.263 BP, MPEG-1/2/4, AVS+/AVS, VP8, MJPEG, XVID, WMA9, VC-1, Sorenson Spark, supporting up to 1080P@60fps Video encoder • H.265/H.264, supporting up to 4K@30fps • MJPEG encoder up to 4K@15fps Image encoder & decoder • JPEG encoder up to 4K@15fps • JPEG decoder up to 1080P@60fps
Video Output	• 1x RGB, up to 1920x1080@60fps • 1x dual-link LVDS, up to 1920x1080@60fps • 2x 4-lane MIPI DSI output - Up to 2K@120fps for single link, and 2.5K@60fps or 4K@45fps for dual link - MIPI DSI0 supports DSC1.1, up to 2000x1200@120fps • 1x eDP1.4b/DP1.4 - Up to 4K@60fps - Supports HDCP1.4 and HDCP2.3 • 1x HDMI 2.0b TX - Up to 4K@60fps - Supports HDCP1.4 and HDCP2.2

Features

Video Input	• 2x Parallel CSI - 8/10/12/16-bit data width - Up to 4*1280x720@30fps for BT.656 and up to 4*1920x1080@30fps for BT.1120 • 3x MIPI CSI - 4 + 4 + 2-lane MIPI CSI, up to 2.0 Gbit/s per lane - Up to 6-channel BK output online
Audio	• 5x I2S • 1x 8-channel DMIC, up to 8 KHz-48 KHz sampling rate • 1x OWA input and 1x OWA output
Security	• AES/DES/3DES/XTS/SM4 symmetrical algorithm • MD5/SHA/HMAC/SM3 hash algorithm • RSA/ECC/SM2 asymmetrical algorithm • PRNG/TRNG random bit generate algorithm • Support secure boot • Support secure memory isolation
Connectivity	• 1x PCIe3.0 DM • 1x USB3.1 GEN2 DRD, forming a combo PHY with eDP1.4b/DP1.4 or PCIe3.0 DM • 1x USB2.0 DRD • 1x USB2.0 Host • 1x SDIO3.0 • 1x GMAC • 3x 10-channel PWM • 5x SPI • 9x UART • 16x TWI • 1x 7-channel GPADC • 1x 1-channel LRADC • 1x LEDC • 2x IR_RX • 1x IR_TX
Power Management	• Equipped with advanced Allwinner Power & Battery Management ICs
Package	• ED-FCCSP 570 balls • 15 mm x 15 mm body size, 0.5&0.4 mm mixed ball pitch, 0.3 mm ball size
Process	• 12 nm

Block Diagram

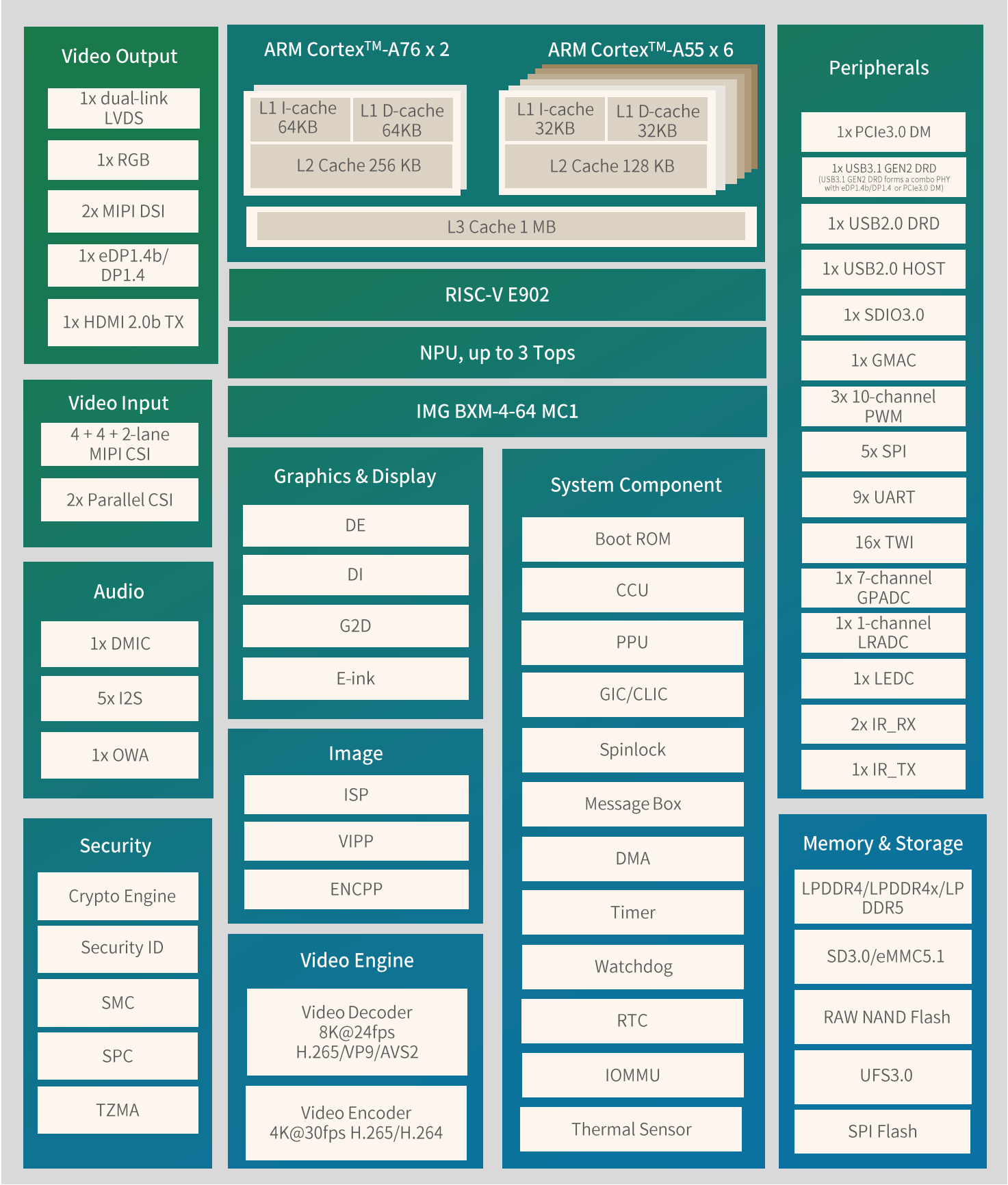

Application Diagram

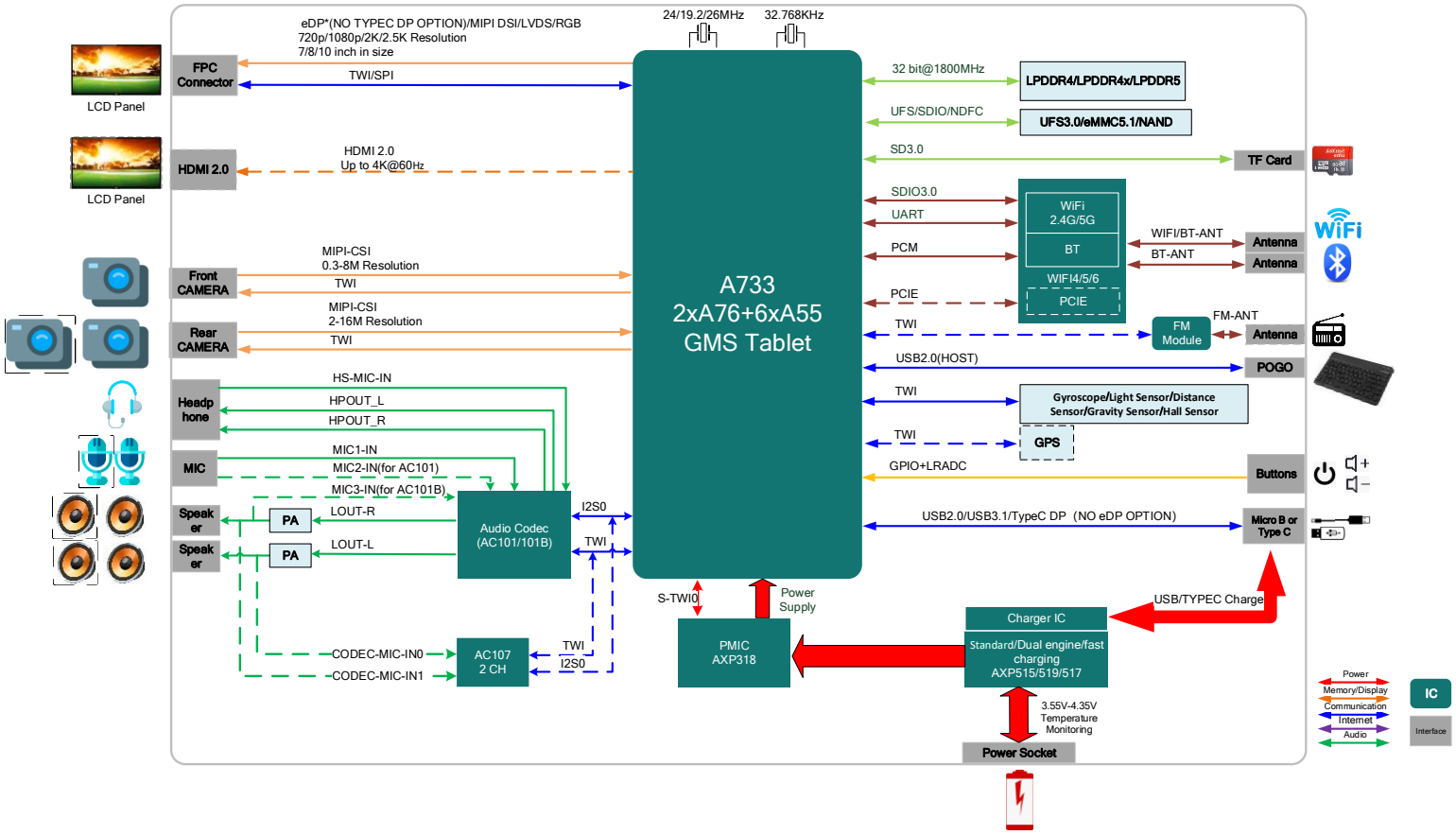

ABOUT ALLWINNER

Allwinner Technology, founded in 2007, is a outstanding designer dedicated to intelligent application SoC, high performance analog component and wireless connectivity IC. It is headquartered in Zhuhai China, with other R&D centers and offices in Shenzhen, HongKong, Xi'an, Beijing and Shanghai. Listed on the GEM of the Shenzhen Stock Exchange in 2015, with the stock code 300458.

Motivated by customer-oriented strategy, Allwinner aligns remarkable R&D teams with long-term core-technology investment in UHD video processing, high-performance multi-core CPU/GPU integration with AI and advanced manufacturing process in terms of high integration , ultra-low power consumption and full-stack integration platform, providing competitive turnkey solutions with considerate services. The products powered by Allwinner spread across from smart hardware, smart home, consumer electronics, HD media, smart video, connected car, industry control, wireless communication to analog products.

CONTACT US

Email: service@allwinnertech.com

This brief is for reference only and has no commitment. All content contained herein is subject to changes without notice.
©2024 Allwinner Technology Co., Ltd.