T736
MX-HN3

Octa-Core High-performance Processor

Overview

The T736MX-HN3 is based on big.LITTLE ARM architecture, targeted at applications such as in-vehicle intelligence, digital signage, development boards, edge gateways, and cloud terminals.

Excellent Compute Capacity

It integrates dual-core ARM Cortex™-A76+hexa-core ARM Cortex™-A55, 3 Tops NPU, and IMG BXM-4-64 MC1. The big.LITTLE ARM architecture with a NPU operating up to 3 TOPs enables a balance between performance and power consumption. Besides, the IMG BXM-4-64 MC1 offers smoother images and enhanced bandwidth management.

Great Storage Performance

It supports external LPDDR4/LPDDR4x/LPDDR5, UFS3.0, eMMC5.1, etc. to realize greater storage performance.

Advanced Display and Imaging

It features two MIPI DSI, two RGB, two dual-link LVDS, e-ink, HDMI2.0, DP1.4/eDP1.4b interfaces and the independent output on dual display. In addition, the new-generation display engine and ISP further optimizes the image quality.

Multi-display System

It supports up to triple or quadruple display when the resolutions or frame rates of two DSI or two dual-link LVDS are the same.

- Main display (1*2.5K@60fps MIPI DSI or 2*2K@60fps MIPI DSI) + Secondary display (1*2K LVDS/RGB/HDMI/eDP)
- Main display (1*4K@60fps HDMI/eDP or 2*1024x768 LVDS) + Secondary display (1*2K LVDS/RGB/DSI or 2*1024x2048 MIPI DSI)

Features

CPU	• Dual-core ARM Cortex™-A76+Hexa-core ARM Cortex™-A55 - A76: L1 per core 64 KB I-Cache and 64 KB D-Cache， L2 per core 256 KB - A55: L1 per core 32 KB I-Cache and 32 KB D-Cache， L2 per core 128 KB - Shared 1 MB L3 Cache • Single-core RISC-V E902
GPU	• IMG BXM-4-64 MC1
NPU	• NPU, up to 3 Tops
Memory& Storage	• External 32-bit LPDDR4/LPDDR4x/LPDDR5, up to 16 GB • 192 KB SRAM +512 KB shared SRAM • SD 2.0/3.0, eMMC 5.0/5.1 • 1x 2-lane UFS 3.0 • 1x 8-bit RAW NAND Flash • 1x SPI Flash, supporting up to Octal-I/O SPI mode and DTR mode
Graphics & Display	• DE, supporting triple or quadruple display - Main display: up to 4K@60fps VI/UI output, 4K VI input, 4K UI input - Secondary display: up to 2K VI/UI input • DI, up to 1920x1080@60fps • G2D, up to 7680x7680 pixel layer size • E-ink, up to 2560x1650@106fps
Image	• ISP - Supports multiple sensors input - Performance of one sensor: linear 8M@60fps online, 2f-wdr 8M@30fps online, linear 24M@25fps offline, and 2f-wdr 8M@30fps offline - Supports multiple data stream out - Supports ISP adjustment on the PC (online/offline/remote debugging) • ENCPP, up to 8K x 8K resolution
Video Engine	**Video decoding** • H.265 MP, VP9, AVS2, supporting up to 8K@24fps • H.264 BL/MP/HP, supporting up to 4K@30fps • H.263 BP, MPEG-1/2/4, AVS+/AVS, VP8, MJPEG, XVID, WMA9, VC-1, Sorenson Spark, supporting up to 1080P@60fps **Video encoding** • H.265/H.264, supporting up to 4K@30fps • MJPEG encoder up to 4K@15fps **Image encoding & decoding** • JPEG encoder up to 4K@15fps • JPEG decoder up to 1080P@60fps
Video Output	• 2x RGB, up to 1920x1080@60fps • 2x dual-link LVDS, up to 1920x1080@60fps • 2x 4-lane MIPI DSI output - Up to 2K@120fps for single link, and 2.5K@60fps or 4K@45fps for dual link - MIPI DSI0 supports DSC1.1, up to 2000x1200@120fps • 1x eDP1.4b/DP1.4 - Up to 4K@60fps - Supports HDCP1.4 and HDCP2.3 • 1x HDMI 2.0b TX - Up to 4K@60fps - Supports HDCP1.4 and HDCP2.2

Features

Video Input	• 2x Parallel CSI - 8/10/12/16-bit data width - Up to 4*1280x720@30fps for BT.656 and up to 4*1920x1080@30fps for BT.1120 • 3x MIPI CSI - 4 + 4 + 2-lane MIPI CSI, up to 2.0 Gbit/s per lane - Up to 6-channel BK output online, 8-channel BK output offline
Audio	• 5x I2S • 1x 8-channel DMIC, up to 8 KHz-48 KHz sampling rate • 1x OWA input and 1x OWA output
Security	• AES/DES/3DES/XTS/SM4 symmetrical algorithm • MD5/SHA/HMAC/SM3 hash algorithm • RSA/ECC/SM2 asymmetrical algorithm • PRNG/TRNG random bit generate algorithm • Support secure boot • Support secure memory isolation
Automotive Connectivity	• 1x PCIe3.0 DM • 1x USB3.1 GEN2 DRD, forming a combo PHY with eDP1.4b/DP1.4 or PCIe3.0 DM • 1x USB2.0 DRD • 1x USB2.0 Host • 2x GMAC
General Connectivity	• 1x SDIO 3.0 • 3x 10-channel PWM • 6x SPI • 9x UART • 16x TWI • 1x 10-channel GPADC • 1x 1-channel LRADC • 1x LEDC • 2x IR_RX • 1x IR_TX
Power Management	• Equipped with advanced Allwinner Power & Battery Management ICs
Package	• ED-FCCSP 667 balls • 17 mm x 17 mm body size, 0.5 mm ball pitch, 0.3 mm ball size
Process	• 12 nm

Block Diagram

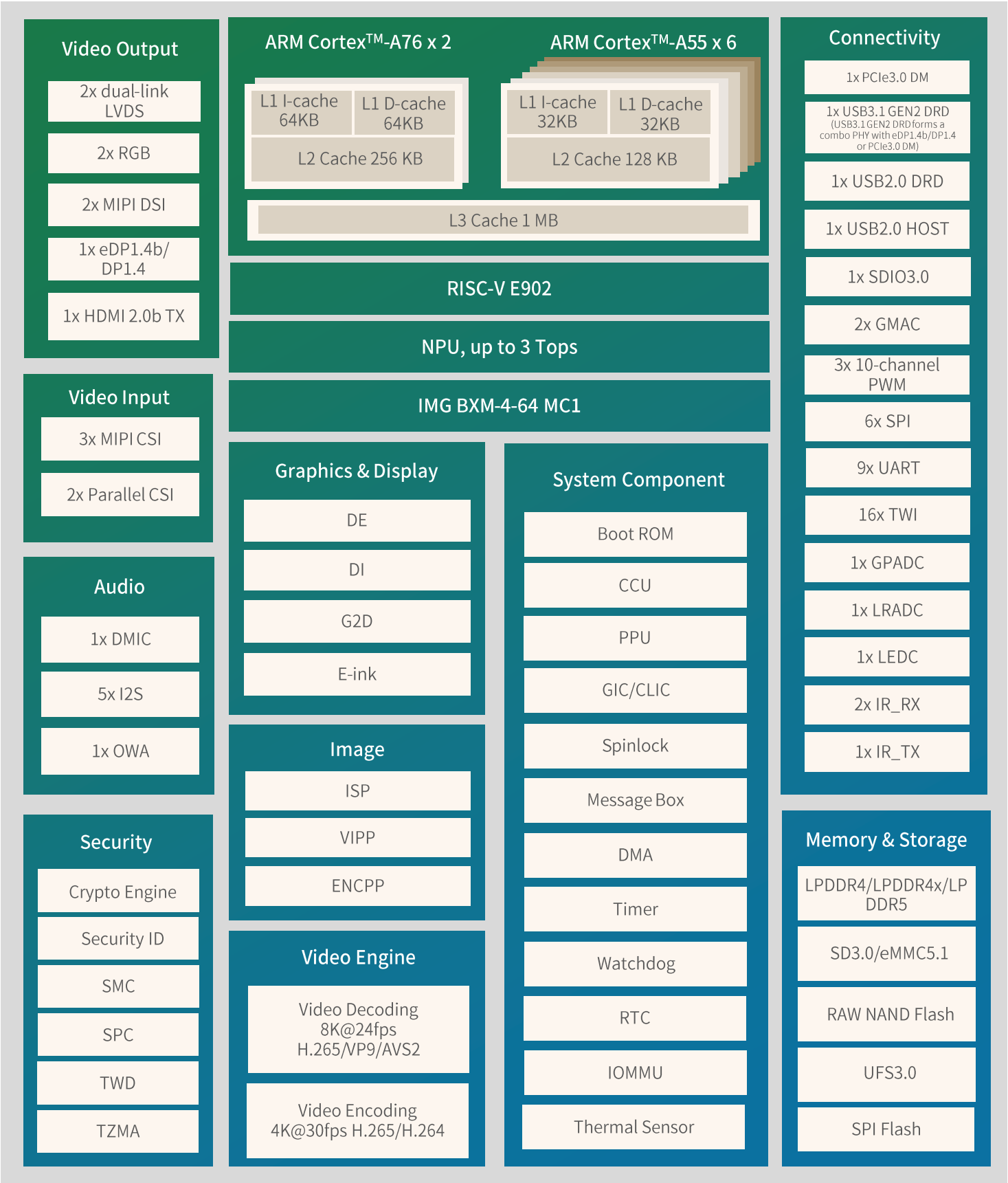

Application Diagram

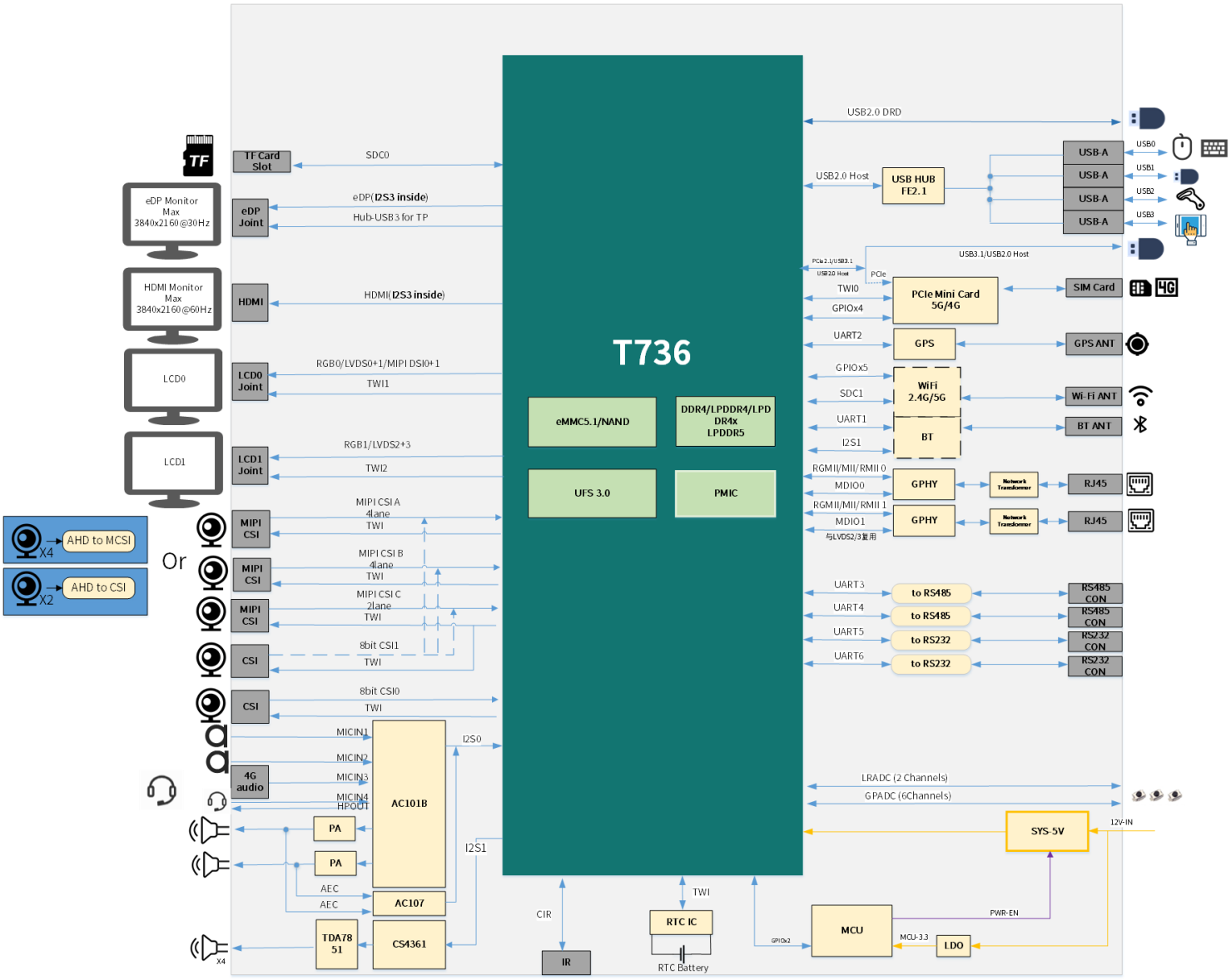

ABOUT ALLWINNER

Allwinner Technology, founded in 2007, is a outstanding designer dedicated to intelligent application SoC, high performance analog component and wireless connectivity IC. It is headquartered in Zhuhai China, with other R&D centers and offices in Shenzhen, HongKong, Xi'an, Beijing and Shanghai. Listed on the GEM of the Shenzhen Stock Exchange in 2015, with the stock code 300458.

Motivated by customer-oriented strategy, Allwinner aligns remarkable R&D teams with long-term core-technology investment in UHD video processing, high-performance multi-core CPU/GPU integration with AI and advanced manufacturing process in terms of high integration , ultra-low power consumption and full-stack integration platform, providing competitive turnkey solutions with considerate services. The products powered by Allwinner spread across from smart hardware, smart home, consumer electronics, HD media, smart video, connected car, industry control, wireless communication to analog products.

CONTACT US

Email: service@allwinnertech.com

This brief is for reference only and has no commitment. All content contained herein is subject to changes without notice.
©2024 Allwinner Technology Co., Ltd.