AXP515 Single Cell NVDC BMU with E-gauge

1 Features

- 3.9V–5.5V Input Operating Range and Support single Cell Battery
- Battery charge and discharge coulomb counter & E-gauge 2.x
- Support TWSI(Two Wire Serial Interface)
- High efficiency 3A, 1uH inductor buck mode switch charger
- Boost mode operation with adjustable output from 4.5V to 5.5V, and with current limit
- Integrated control to switch between charge and boost mode
- High battery discharge efficiency with 18mohm battery discharge MOSFET up to 8A
- BATFET control to support shipping mode, wake up and full system reset
- Flexible autonomous and TWSI mode for optimal system performance
- High integration includes all MOSFETS, current sensing and loop compensation
- Support BC1.2 and CC logic
- Protection

  Input Over-Voltage Protection

  Battery Thermistor Sense Hot/Cold Charge Suspend

  Programmable Safety Timer for Charger

  Die Thermal Balance for Charger

  Thermal Shutdown

2 Applications

- Portable devices
- Wireless bluetooth speaker

3 Description

AXP515 is a highly integrated BMU with NVDC power path management and E-gauge for single cell Li-battery. AXP515 can be used with other PMU together to provide an easy and flexible power management solution for SOC. AXP515 also can be used independently to provide battery management solutions for various portable devices

AXP515 supports high output current up to 3A for fast charging. Besides, AXP515 supports OTG mode with current limit. To ensure the security and stability of the system, AXP515 provides multiple channels 12-bit ADC for voltage/current/temperature monitor and integrates protection circuits such as over-voltage protection (OVP), over-current protection (OCP) and over-temperature protection (OTP). Moreover, AXP515 features a unique E-Gauge™(Fuel Gauge) system, making power gauge easy and exact.

AXP515 supports type-C cc logic and BC1.2 protocol. It can automatically detect different adapters and adjust the input current limit.

AXP515 supports TWSI for system to dynamically adjust output voltages, charge current and configure interrupt condition.

Device Information

Part Number	Package	Body Size
AXP515	QFN-40	5mm * 5mm

Simplified Application Diagram

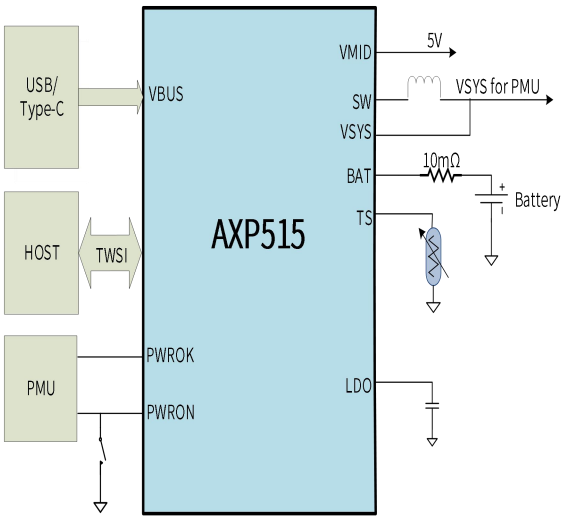

Copyright©Shenzhen X-Powers Technology Co., Ltd. All Rights Reserved.