AXP515 Single Cell NVDC BMU with E-gauge

1 Features

- 3.9V–5.5V Input Operating Range and Support single Cell Battery
- Battery charge and discharge coulomb counter & E-gauge 2.x
- Support TWSI(Two Wire Serial Interface)
- High efficiency 3A, 1uH inductor buck mode switch charger
- Boost mode operation with adjustable output from 4.5V to 5.5V, and with current limit
- Integrated control to switch between charge and boost mode
- High battery discharge efficiency with 18mohm battery discharge MOSFET up to 8A
- BATFET control to support shipping mode, wake up and full system reset
- Flexible autonomous and TWSI mode for optimal system performance
- High integration includes all MOSFETS, current sensing and loop compensation
- Support BC1.2 and CC logic
- Protection

  Input Over-Voltage Protection

  Battery Thermistor Sense Hot/Cold Charge Suspend

  Programmable Safety Timer for Charger

  Die Thermal Balance for Charger

  Thermal Shutdown

2 Applications

- Portable devices
- Wireless bluetooth speaker

3 Description

AXP515 is a highly integrated BMU with NVDC power path management and E-gauge for single cell Li-battery. AXP515 can be used with other PMU together to provide an easy and flexible power management solution for SOC. AXP515 also can be used independently to provide battery management solutions for various portable devices

AXP515 supports high output current up to 3A for fast charging. Besides, AXP515 supports OTG mode with current limit. To ensure the security and stability of the system, AXP515 provides multiple channels 12-bit ADC for voltage/current/temperature monitor and integrates protection circuits such as over-voltage protection (OVP), over-current protection (OCP) and over-temperature protection (OTP). Moreover, AXP515 features a unique E-Gauge™(Fuel Gauge) system, making power gauge easy and exact.

AXP515 supports type-C cc logic and BC1.2 protocol. It can automatically detect different adapters and adjust the input current limit.

AXP515 supports TWSI for system to dynamically adjust output voltages, charge current and configure interrupt condition.

Device Information

Part Number	Package	Body Size
AXP515	QFN-40	5mm * 5mm

Simplified Application Diagram

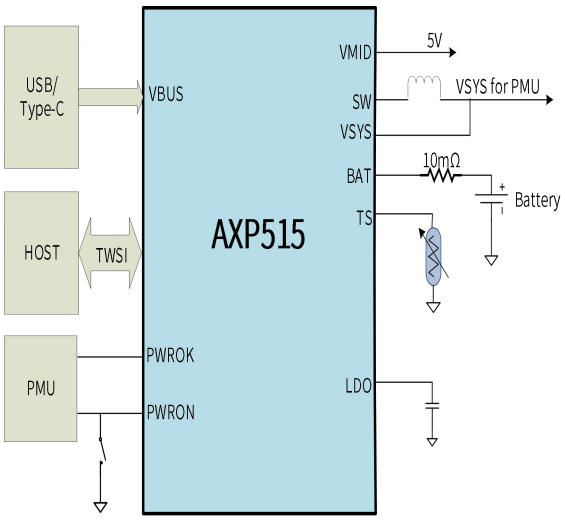

Copyright©Shenzhen X-Powers Technology Co., Ltd. All Rights Reserved.

Revision History

Revision	Date	Author	Description
1.0	May 06, 2024	AWA 1017	Initial version

Copyright©Shenzhen X-Powers Technology Co., Ltd. All Rights Reserved.

Contents

1 Features 1
2 Applications 1
3 Description 1
Revision History 2
Contents 3
Figures 5
Tables 6
4 Pin Configuration and Functions 7
5 Specifications 9
5.1 Absolute Maximum Ratings[1] 9
5.2 ESD Ratings 9
5.3 Recommended Operating Conditions 9
5.4 Thermal Information 9
5.5 Electrical Characteristics 10
6 Detail Description 14
6.1 Overview 14
6.2 Function Block Diagram 15
6.3 Serial Interface Communication 16
6.4 NVDC 16
6.5 Power On/Off and reset 16
6.5.1 Power on reset(POR) 16
6.5.2 Power up from BAT 16
6.5.3 Power up from VBUS 16
6.5.4 System power on/off management 17
6.5.5 Power off 18
6.5.6 System reset 18
6.6 Charger 19
6.6.1 Characteristics 19
6.6.2 Charging condition 19
6.6.3 Charging process 19
6.6.4 Charging protection 20
6.6.5 Charging indication 22
6.7 BATFET 23
6.7.1 Enter shipping mode 23
6.7.2 Exit shipping mode 23
6.8 Boost mode 23

Copyright©Shenzhen X-Powers Technology Co., Ltd. All Rights Reserved.

6.9 RBFET 23
6.10 ADC 24
6.11 E-Gauge 24
6.12 IRQ, LDO 24
6.12.1 IRQ 24
6.12.2 LDO 24
6.13 Type-C 25
6.14 Register 25
6.14.1 Register List 25
6.14.2 Register Description 28
7 Application Information 61
7.1 Charger 61
7.2 BUCK/LDO 61
7.3 BOOST 61
7.4 IO 62
7.5 Typical Application 63
8 PCB Layout Guideline 64
8.1 Charging and Discharging Part 64
8.2 High Current Path 64
9 Package, Carrier, Storage and Baking Information 66
9.1 Package 66
9.2 Carrier 66
9.3 Storage 67
9.3.1 Moisture Sensitivity Level(MSL) 67
9.3.2 Bagged Storage Conditions 68
9.3.3 Out-of-bag Duration 68
9.4 Baking 68
10 Reflow Profile 69

Copyright©Shenzhen X-Powers Technology Co., Ltd. All Rights Reserved.

Figures

Figure 4-1 Pin Map 7
Figure 9-1 Package Information 66
Figure 9-2 AXP515 marking. 66
Figure 9-3 Tray Dimension Drawing. 67
Figure 9-4 Packing Quantity Information 67
Figure 10-1 Typical Reflow Profile 69

Copyright©Shenzhen X-Powers Technology Co., Ltd. All Rights Reserved.

Tables

Table 4-1 Pin Description 7
Table 6-1 Charging Parameter 19
Table 6-2 NTC ADC information 21
Table 6-3 TS source setting 21
Table 6-4 CHGLED setting 22
Table 6-5 ADC information 24
Table 9-1 AXP515 Marking Definitions 66
Table 9-2 Tray Carrier Information 66
Table 9-3 MSL Summary 67
Table 9-4 Bagged Storage Conditions 68
Table 9-5 Out-of-bag Duration 68
Table 9-6 Baking Conditions 68
Table 10-1 AXP515 Reflow Profile Conditions 69

Copyright©Shenzhen X-Powers Technology Co., Ltd. All Rights Reserved.

4 Pin Configuration and Functions

Figure 4-1 Pin Map

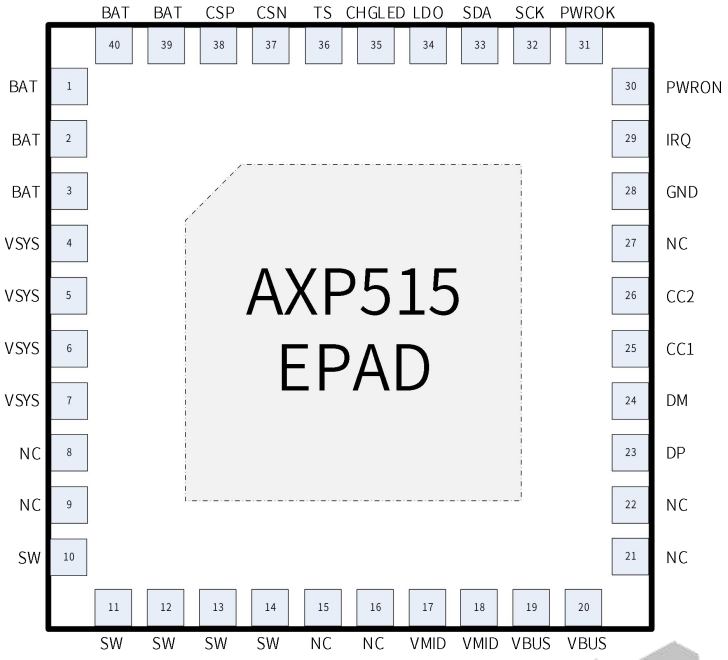

Table 4-1 Pin Description

Pin		I/O[1]	Description
NO.	Name		
1/2/3	BAT	P	Battery connection point. Connect a 10uF capacitor closely to the BAT pin.
4/5/6/7	VSYS	P	System connection point. Connect two 22uF capacitors closely to the VSYS pin.
8/9	NC	/	/
10/11/12/13/14	SW	P	Switching node connecting to output inductor.
15/16	NC	/	/
17/18	VMID	P	VMID power output.
19/20	VBUS	P	Charger Input.
21/22	NC	/	/
23	DP	DIO	BC1.2 detection, connect to DP of USB connector.
24	DM	DIO	BC1.2 detection, connect to DM of USB connector.
25	CC1	DIO	Type-C cc logic, connect to CC1 of USB connector.
26	CC2	DIO	Type-C cc logic, connect to CC2 of USB connector.
27	NC	/	/
28	GND	G	Analog ground for internal circuits.
29	IRQ	DIO	IRQ output. Connect the IRQ to a logic rail via a resistor. The IRQ pin sends a low level signal to host to report device status and fault.

Copyright©Shenzhen X-Powers Technology Co., Ltd. All Rights Reserved.

30	PWRON	DIO	BATFET enable/BMU reset input. Connect a key between PWRON and GND, Internal pulled up.
31	PWROK	DI	Used for system power ON/OFF management. It can be connected to PWROK pin of PMU or directly pulled up to above 1.8V.
32	SCK	DI	Clock pin for serial interface.
33	SDA	DIO	Data pin for serial interface.
34	LDO	PO	LDO output. It is used to provide power for RTC.
35	CHGLED	DO	Charge status output to indicate various charger operation.
36	TS	AI	Battery Temperature Sensor Input.
37	CSN	AI	Current sense input. It is connected to one terminal of 10mohm current sense resistor and battery.
38	CSP	AI	Current sense input. It is connected to the other terminal of 10mohm current sense resistor and BAT pin.
39/40	BAT	P	Battery connection point. Connect a 10uF capacitor closely to the BAT pin.
EP	EP	G	Exposed PAD. Be connected to the power ground.

(1)**O** for output, **I** for input, **IO** for input/output, **D** for digital, **A** for analog, **P** for power, and **G** for ground.

Copyright©Shenzhen X-Powers Technology Co., Ltd. All Rights Reserved.

5 Specifications

5.1 Absolute Maximum Ratings(1)

Over operating free-air temperature range(unless otherwise noted)

SYMBOL	DESCRIPTION	MIN	MAX	UNIT
VBUS	Voltage range(with respect to GND)	-0.3	12	V
VMID,BAT,VSYS		-0.3	7	V
SW,SDA,SCK,IRQ,LDO, TS,PWRON,PWROK,DP, DM,CC1,CC2,CHGLED,NC, CSN,CSP		-0.3	7	V
PGND to GND		-0.3	0.3	V
Ta	Operating Temperature Range	-40	85	°C
TJ	Junction Temperature Range	-40	125	°C
Ts	Storage Temperature Range	-40	150	°C
TLEAD	Maximum Soldering Temperature (at leads，10sec)		300	°C

(1)Stresses beyond those listed under absolute maximum ratings may cause permanent damage to the device. These are stress ratings only. Functional operation of the device at these or any other conditions beyond those indicated under recommended operating conditions is not implied. Exposure to absolute maximum rated conditions for extended periods may affect device reliability.

5.2 ESD Ratings

		VALUE	UNIT
VESD	Human body model(HBM)(1)	±2000	V
	Charged device model(CDM)(2)	±750	V

(1) Reference:ESDA/JEDEC JS-001-2014.

(2) Reference:ESDA/JEDEC JS-002-2014.

5.3 Recommended Operating Conditions

SYMBOL	DESCRIPTION	MIN	MAX	UNIT
VIN	Input voltage(VBUS)	3.9	5.5	V
IIN	Input current(VBUS)		3.25	A
ISYS	Output current		3	A
VBAT	Battery voltage		4.608	V
IBAT	Fast charging current		3	A

5.4 Thermal Information

Thermal Metric(1)		VALUE	UNIT
θJA	Junction-to-ambient thermal resistance	20.1	°C/W

Copyright©Shenzhen X-Powers Technology Co., Ltd. All Rights Reserved.

θJB	Junction-to-board thermal resistance	10.8	
θJC	Junction-to-case(top) thermal resistance	22.8	

(1)Thermal metrics are calculated refer to JEDEC document JESD51.

5.5 Electrical Characteristics

$V_{VBUS_UVLOZ} < V_{VBUS} < V_{ACOV}$ and $V_{VBUS} > V_{BAT} > V_{SLEEP}$, T_J = 25°C(unless otherwise noted)

Parameters		Test Conditions	MIN	TYP	MAX	UNIT
QUIESCENT CURRENTS						
I_{BAT}	Battery discharge current (BAT, SW, SYS) in buck mode	no VBUS, BATFET Disabled, Battery detection Disabled, CC CLK Disabled		35		uA
		no VBUS, BATFET Disabled, Battery detection Disabled, CC CLK Enabled		52		uA
I_{VBUS}	Input supply current (VBUS) in buck mode	VBUS = 5V, BAT = 3.8V, converter switching, BATFET Disabled, I_{SYS} = 0A		1.2		mA
I_{BOOST}	Battery discharge current in boost mode	VBAT=4.2V, boost mode, I_{VBUS}= 0A, converter switching		2		mA
VBUS/BAT POWER UP						
V_{VBUS_OP}	VBUS operating range		3.9		5.5	V
V_{VBUS_UVLOZ}	VBUS for active TWSI, no battery		3.4	3.7	4.1	V
V_{SLEEP}	Sleep mode falling threshold			90		mV
V_{SLEEPZ}	Sleep mode rising threshold			250		mV
V_{ACOV}	VBUS over-voltage rising threshold		6.3	6.4	6.5	V
V_{ACOV}	VBUS over-voltage falling threshold		6	6.2	6.4	V
V_{BAT_UVLOZ}	Battery for active TWSI, no VBUS		2.2	2.5	2.7	V
V_{BAT_DPL}	Battery depletion falling threshold		2.0	2.4	2.6	V
V_{BAT_DPLZ}	Battery depletion rising threshold		2.1	2.6	2.7	V
POWER-PATH MANAGEMENT						
V_{SYS}	Typical system regulation voltage	Isys = 0A, VBAT> V_{SYS_MIN}, BATFET Disabled		VBAT+ 50mV		V
		Isys= 0A, VBAT<V_{SYS_MIN}, BATFET Disabled		Vsys_min+150mV		V
V_{SYS_min}	Minimum DC System Voltage Output	VBAT< V_{SYS_MIN}, V_{SYS_MIN} = 3.5V, I_{SYS}= 0A		3.65		V
V_{SYS_max}	Maximum DC System	VBAT=4.25V, V_{SYS_MIN} = 3.5V, I_{SYS}= 0A		4.3		V

Copyright©Shenzhen X-Powers Technology Co., Ltd. All Rights Reserved.

	Voltage Output					
V_{BATGD}	Battery good comparator rising threshold	VBAT rising		3.8		V
V_{BATGD_HYST}	Battery good comparator falling threshold	VBAT falling		150		mV
Battery Charger						
V_{BATREG_RANGE}	Typical Charge voltage range		3.84		4.608	V
V_{BATREG_STEP}	Typical charge voltage step			16		mV
V_{BATREG}	Charge voltage resolution accuracy	VBAT = 4.208V (REG8C[7:2]=010111)	-0.5%		0.5%	
$I_{CHG_REG_RANGE}$	Typical Fast charge current regulation range		0		3072	mA
$I_{CHG_REG_STEP}$	Typical Fast charge current regulation step			64		mA
$I_{CHG_REG_ACC}$	Fast charge current regulation accuracy	VBAT = 3.2V, I_{CHG}=256mA	-40%		40%	
		VBAT = 3.2V, I_{CHG}=1536mA	-10%		10%	
$V_{BATLOWV}$	Battery LOWV falling threshold	Fast charge to precharge, BATLOWV(REG06[1])=1	2.5	2.9	3.1	V
	Battery LOWV rising threshold	Precharge to fast charge, BATLOWV(REG8C[1])=1 (Typical 200-mV hysteresis)	2.7	3.1	3.3	V
I_{PRECHG_RANGE}	Precharge current range		64		1024	mA
I_{PRECHG_STEP}	Typical precharge current step			64		mA
I_{PRECHG_ACC}	Precharge current accuracy	VBAT=2.6V, I_{PRECHG} = 512mA	-40%		40%	
I_{TERM_RANGE}	Termination current range		64		1024	mA
I_{TERM_STEP}	Typical Termination current step			64		mA
V_{SHORT}	Battery short voltage	VBAT falling		2		V
I_{SHORT}	Battery short current	VBAT < 2.0 V		10		mA
V_{RECHG}	Recharge Threshold below VBATREG	VBAT falling, V_{RECHG} (REG8C[0]=0) = 0		100		mV
		VBAT falling, V_{RECHG} (REG8C[0]=1) = 1		200		mV
FSW	PWM Switching Frequency, and digital clock	Oscillator frequency		1.5		MHz
Input Voltage / Current Regulation						
V_{INDPM_RANGE}	Typical Input voltage regulation range		3.88		5.08	V

Copyright©Shenzhen X-Powers Technology Co., Ltd. All Rights Reserved.

V_{INDPM_STEP}	Typical Input voltage regulation step			80		mV
V_{INDPM_ACC}	Input voltage regulation accuracy	V_{INDPM}=3.88V or 4.36V	-4%		4%	
I_{INDPM_RANGE}	Typical Input current regulation range		100		3250	mA
I_{INDPM_STEP}	Typical Input current regulation step			50		mA
I_{INDPM_ACC}	Input current regulation accuracy VBAT = 5V, current pulled from SW	I_{INLIM} =200mA	-40%		40%	
		I_{INLIM} =500mA	-30%		30%	
I_{IN_START}	Input Current regulation during system start up	V_{SYS} = 2.2V, I_{INLIM} (REG10[5:0])>=200mA		200		mA
BAT OVER-VOLTAGE/CURRENT PROTECTION						
V_{BATOVP}	Battery over-voltage threshold	VBAT rising, as percentage of VBAT_REG		104%* V_{BAT_REG}		V
V_{BATOVP_HYST}	Battery over-voltage hysteresis	VBAT falling, as percentage of VBAT_REG		2%		V
Boost Mode Operation						
$V_{BST_REG_RANGE}$	Typical Boost mode regulation voltage range		4.58		5.48	V
$V_{BST_REG_STEP}$	Typical Boost Mode Regulation voltage step			60		mV
$V_{BST_REG_ACC}$	Boost mode regulation voltage accuracy	$I_{(VMID)}$ = 0A, V_{BST}=5.126V (REG13[7:4] = 1001)	-3%		3%	
$V_{BST_BAT_LOWV}$	Battery voltage exiting boost mode	BAT falling	2.4	2.6	2.9	V
I_{BST}	Boost mode output current range				1.5	A
V_{BST_OVP}	Boost mode over-voltage threshold	Rising threshold	5.8	6.2	6.3	V
$V_{BST_OVP_HYS}$	Boost mode over-voltage threshold hysteresis	Falling threshold	100	200	300	mV
FSW	PWM Switching Frequency, and digital clock	Oscillator frequency		1.5		MHz
Analog-to-Digital Converter (ADC)						
RES	Resolution	Rising threshold		12		bits
V_{BAT_RANGE}	Typical battery voltage range	V_{VBUS} > VBAT + V_{SLEEP} or boost mode is enabled			4.914	V
		V_{VBUS} < VBAT + V_{SLEEP} and boost mode is disabled			4.914	V
V_{BAT_RES}	Typical battery voltage resolution			1.2		mV

Copyright©Shenzhen X-Powers Technology Co., Ltd. All Rights Reserved.

I_{BAT_RANGE}	Typical battery charge current range	V_{VBUS} > VBAT + V_{SLEEP} and VBAT > $V_{BATSHORT}$			4.08	A
I_{BAT_RES}	Typical battery charge current resolution			2		mA
T_{jRANGE}	Typical IC Tj range		-267.7		167.4	°C
T_{jRES}	Typical IC Tj resolution			0.10625		°C
V_{TS_RANGE}	Typical TS voltage range				3.276	V
V_{TS_RES}	Typical TS voltage resolution			0.8		mV
Logic I/O pin Characteristics (IRQ/PWRON/PWROK)						
V_{IH}	Input high threshold level		1.3			V
V_{IL}	Input low threshold level				0.8	V
TWSI INTERFACE (SCL, SDA)						
V_{CC}	Input Supply Voltage			1.8		V
ADDRESS	TWSI Slave Address (7 bits)			0x34		
f_{SCK}	Clock Operating Frequency		100		400	kHZ
V_{IH}	Input high threshold level, SCL and SDA	Pull-up rail 1.8V	1.3			V
V_{IL}	Input low threshold level	Pull-up rail 1.8V			0.8	V
V_{OL}	Output low threshold level	Sink Current = 5mA, sink current			0.8	V

Copyright©Shenzhen X-Powers Technology Co., Ltd. All Rights Reserved.

6 Detail Description

6.1 Overview

AXP515 is a highly integrated BMU with NVDC power path management and E-gauge for single cell Li-battery. AXP515 can be used with other PMU together to provide an easy and flexible power management solution for SOC. AXP515 also can be used independently to provide battery management solutions for various portable devices

AXP515 supports high output current up to 3A for fast charging. Besides, AXP515 supports OTG mode with current limit. To ensure the security and stability of the system, AXP515 provides multiple channels 12-bit ADC for voltage/current/temperature monitor and integrates protection circuits such as over-voltage protection (OVP), over-current protection (OCP) and over-temperature protection (OTP). Moreover, AXP515 features a unique E-Gauge™(Fuel Gauge) system, making power gauge easy and exact.

AXP515 supports type-C cc logic and BC1.2 protocol. It can automatically detect different adapters and adjust the input current limit.

AXP515 supports TWSI for system to dynamically adjust output voltages, charge current and configure interrupt condition.

AXP515 is available in 5mm x 5mm 40-pin QFN package.

Copyright©Shenzhen X-Powers Technology Co., Ltd. All Rights Reserved.

6.2 Function Block Diagram

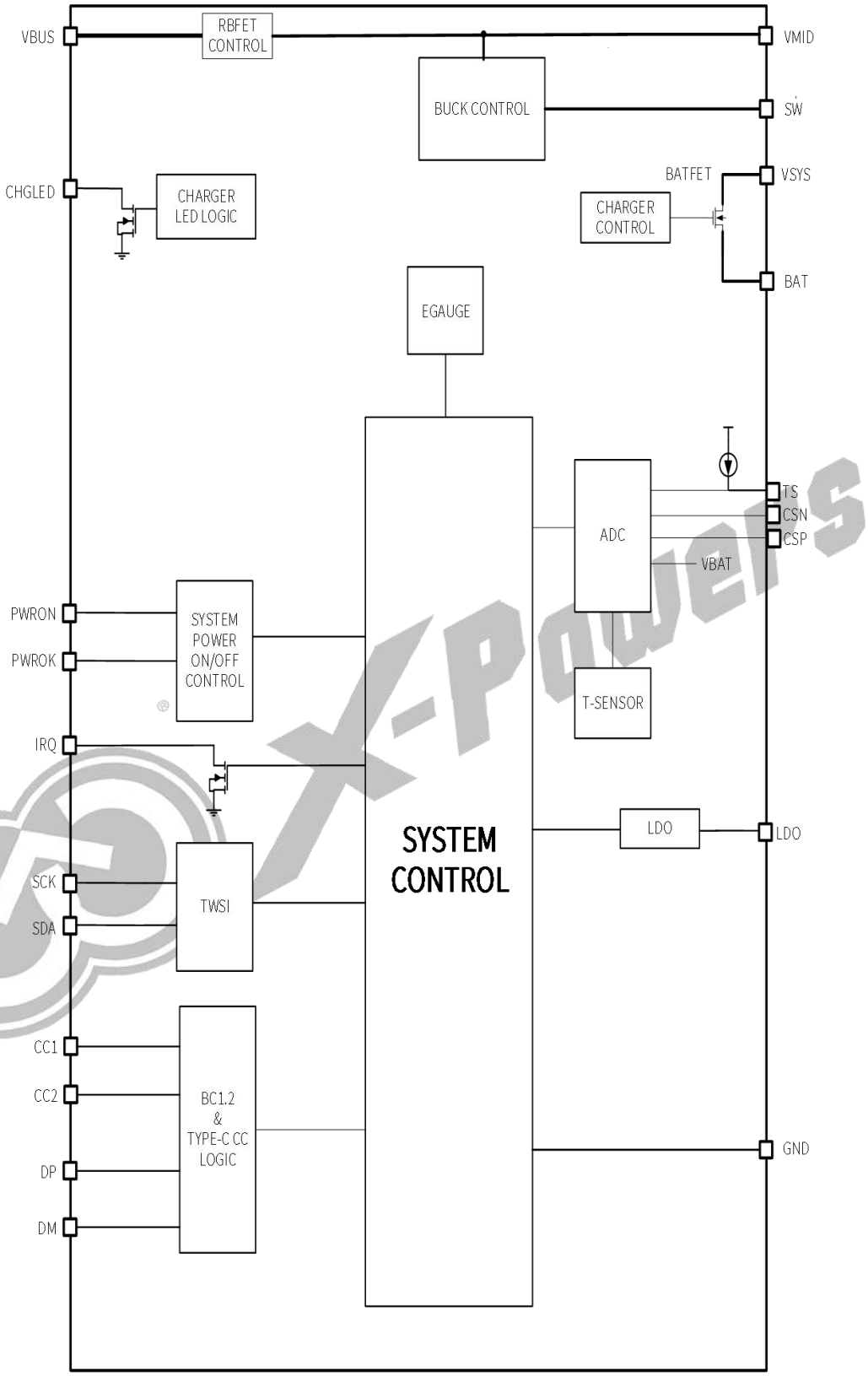

Copyright©Shenzhen X-Powers Technology Co., Ltd. All Rights Reserved.

6.3 Serial Interface Communication

AXP515 supports TWSI protocol and performs as a TWSI slave device with default address 0x68/0x69. When AXP515 powers on, SCK/SDA pin of TWSI will be pulled up to IO Power and then Host can adjust and monitor AXP515 with rich feedback information.

Note: "Host" here refers to system processor.

6.4 NVDC

AXP515 uses Narrow VDC(NVDC) architecture with BATFET connecting system and battery.

VBUS as the charger input, connecting to VSYS pin through a switch mode buck charger, provides power to system and charges battery through BATFET. Charge current can be adjusted automatically according to the feedback current which is detected with an external 10mΩ resistor. When system current(I_{SYS}) changes, the detected current will change, and then the current change signal will feed back to charge loop to adjust the charge current to the setting value.

AXP515 starts up when an adapter is inserted and the input voltage meets the condition. System voltage(V_{SYS}) will rise up to minimum system voltage(V_{SYS_min}). if V_{SYS} does not reach V_{SYS_min}, the charging process does not start up. V_{SYS_min} can be configured by reg12H[2:0]. When V_{SYS} is higher than V_{SYS_min}, charger enabled signal will be sent.

When it is charging, if battery voltage is below V_{SYS_min}, BATFET operates in linear mode(LDO mode) to keep V_{SYS} at V_{SYS_min}. As battery voltage rises above V_{SYS_min}, BATFET is fully on.

When battery voltage is above V_{SYS}, BATFET is turned on and BMU enters supplement mode. When in supplement mode, if the discharge current is lower than 2A, BMU controls the voltage(V_{DS}) between system and battery and keeps V_{DS} at about 20mV to avoid entering and exiting supplement mode repeatedly. As discharge current increases, BMU adjusts BATFET to be fully on and V_{DS} increases linearly. If an adapter is not inserted, system current is provided only by battery. At this time, BATFET is at fully on state.

6.5 Power On/Off and reset

6.5.1 Power on reset(POR)

AXP515 is powered from the higher voltage between VBUS and BAT. When VBUS voltage(V_{VBUS}) is higher than V_{VBUS_UVLOZ} or BAT voltage(V_{BAT}) is higher than V_{BAT_UVLOZ}, the sleep comparator, battery depletion comparator and BATFET driver are active. All registers are reset to the default value. TWSI communication is active and Host can communicate with BMU.

6.5.2 Power up from BAT

If only battery is present and V_{BAT} is higher than depletion threshold(V_{BAT_DPLZ}), BATFET, connecting battery to system, is off by default and need to be turned on by pressing the PWRON key or inserting an adapter.

6.5.3 Power up from VBUS

When VBUS is inserted, BMU detects the input voltage to start up the reference voltage and the bias circuit. When V_{VBUS} is higher than V_{VBUS_UVLOZ}, the VBUS insertion IRQ is sent and the register bit reg02H[1] is set to 1 to indicate VBUS is inserted. Then BMU detects the input source whether it is good or not. If DP/DM automatic detection enabled bit(AUTO_DPDM_EN,reg23H[6]) is active, BMU detects the input source type and set the input current limit(I_{INLIM}) automatically, and then the buck converter starts up.

6.5.3.1 Good source condition

BMU needs to check the current capability of the input source. Only when the input source meets the following requirements can it start the buck converter.

a. VBUS voltage lower than V_{ACOV}

Copyright©Shenzhen X-Powers Technology Co., Ltd. All Rights Reserved.

b. VBUS voltage higher than $V_{VBUSMIN}$ when pulling I_{BADBUS}(typical 30mA)

Once the input source meets the requirements above,the register bit reg00H[1](VBUS_GD) is set to 1 to indicate the input source is good. If the input source does not meet the requirements, detection will be done repeatedly every 2 seconds.

6.5.3.2 Input source type detection

AXP515 integrates USB Charging Specification 1.2(BC1.2) and Type C(cc logic) detection. The type and the power supply capability of the input source can be detected and I_{INLIM} can be set automatically.

After the VBUS_GD bit is set to 1, if DP/DM automatic detection enabled bit (AUTO_DPDM_EN, reg23H[6]) or CC pin automatic detection enabled bit (AUTO_CC_EN,reg23H[4]) is active, BMU starts input source type detection automatically. BC1.2 detection and CC logic detection are independent and they work in parallel, but the detection result of CC logic has higher priority level than that of BC1.2. When the two kinds of detection are both under way, if CC logic detection finishes first and I_{INLIM} is set, I_{INLIM} can not be changed by the BC1.2 detection result. However, if BC1.2 detection finishes first and I_{INLIM} is set, I_{INLIM} can be changed by the CC logic detection result.

After input source type detection finishes, BMU sends IRQ to Host and sets the register bits reg00H[5:0] to set I_{INLIM} according to the detection result.

6.5.3.3 Set input voltage limit(VINDPM)

AXP515 supports wide range of input voltage. V_{INDPM} can be set through reg11H[3:0]. The range of V_{INDPM} is from 3.88V to 5.08V and the step is 80mV.

When VBUS voltage reaches V_{INDPM}, the charge current will decrease automatically until the current is zero. If I_{SYS} is over the input power supply capability, V_{SYS} will drop. If V_{BAT} is above V_{SYS}, BMU will enter the supplement mode.

6.5.3.4 Buck converter start up

After I_{INLIM} is set, the buck converter is enabled. If battery charging is disabled,BATFET is in off state. Otherwise BATFET is in on state and the buck converter charges the battery.

AXP515 integrates soft-start function.When V_{SYS} is lower than 2.2V, I_{INLIM} is forced to the lower one between 200mA and I_{INLIM} register value. When V_{SYS} is higher than 2.2V, I_{INLIM} is set through register value. The working condition of buck converter can switch between PWM and PFM automatically according to the load.

6.5.4 System power on/off management

AXP515 has system power on/off management function. It can be used with other PMU together to complete the function through PWRON pin and PWROK pin. PWRON pin is an IO pin. When it is as input, BMU can detect the status of the external key through it to send IRQ and realize power on reset. When it is as output, BMU can sent power on signals to the behind PMU through PWRON pin. PWROK pin is connected to the PWROK signal of the behind PMU to judge the PMU status.

System status is saved in register bit reg14H[0]. BMU sends power on/off signals according to system status and trigger events.

6.5.4.1 PWRON pin

A Key can be connected between PWRON pin and GND. When PWRON pin is as input, its function is as described below:

- If BMU is in shipping mode, when PWRON key is low for longer than ONLEVEL(reg15H[3:2]), BMU exits shipping mode.
- If BMU is not in shipping mode, when PWRON key is pressed, the negative edge is detected and IRQ is sent. When PWRON key is low for less than IRQLEVEL(reg15H[7:6]), BMU sends a short press IRQ and a positive edge IRQ. When PWRON key is low for longer than IRQLEVEL and less than PORLEVEL(reg15H[5:4]), BMU sends a long press IRQ and a positive edge IRQ. When PWRON key is low for longer than PORLEVEL, power on reset(POR) will be done.

Copyright©Shenzhen X-Powers Technology Co., Ltd. All Rights Reserved.

6.5.4.2 System power on

When system is power off and one of power on sources is detected , BMU sends power on signal to the behind PMU to power on system.

Power on sources include:

- VBUS insertion(V_{VBU}>V_{VBUS_UVLOZ} & V_{VBUS}<V_{ACOV} & V_{SYS}>3.0V & reg17H[7]=1)
- BAT insertion(V_{BAT}>V_{BAT_UVLOZ} & V_{SYS}>3.0V & reg17H[6]=1)
- BAT is charged to normal(V_{BAT}>3.6V & Is charging & reg17H[5]=1)
- IRQ Low level(IRQ pin is low level for more than 16ms & reg17H[4]=1)

Once one of the power on sources above is detected, BMU sends power on signal. Power on signal has three forms, including low level pulse, special sequence and high/low level, which can be configured by registers.

After the power on signal is sent, BMU monitors the status of PWROK pin. If PWROK pin is high level, it means system is powered on successfully and the system status bit(reg14H[0]) is set to 1. If PWROK pin is low level, it means system is powered on unsuccessfully and the system status bit(reg14H[0]) is set to 0.

When high/low level is chose as power on signal, if the system is powered on unsuccessfully or the system is powered off abnormally, the PWROK pin will be low, the system status bit will be set to 0 and the active level will be changed to unactive level.

6.5.4.3 System power off

When system is power on and one of power off sources is detected , BMU sends power off signal to the behind PMU to power off system.

Power off sources include:

- Software power off(Write “1” to reg17H[0])
- Watchdog timer out(Watchdog time out & reg17H[2]=1)

Once one of the power off sources above is detected, BMU sends power off signal. Power off signal has two forms, including low level pulse and high/low level. If power on signal is low level pulse or special sequence, power off signal will be low level pulse. If power on signal is high/low level, power off signal will be the opposite level. The system status bit(reg14H[0]) is set to 0 when PWROK signal changes from high level to low level.

6.5.5 Power off

- When VBUS is removed, BMU disables the charger, RBFET and all the bias circuits. The system is supplied by the battery. If the start-up conditions are meet, the associated circuits are enabled again.
- When the die or the battery is over temperature, BMU disables the buck converter, OTG and BATFET.

6.5.6 System reset

AXP515 has power on reset and system reset.

1. Power on reset(POR)

There are two ways of power on reset.

- VBUS or battery inserts and the voltage meets the start-up conditions.
- PWRON key is low for longer than PORLEVEL(PORLEVEL is set by reg15H[5:4] and the default value is 12s).

2. System reset

System reset method just resets some associated registers. There are three ways of system reset.

- System power off. When the system status bit(reg14H[0]) is set to 0, BMU implements system reset.
- Software reset. Write “1” to reg14H[3].

Copyright©Shenzhen X-Powers Technology Co., Ltd. All Rights Reserved.

- Watchdog time out to reset. The function is disabled by default.

6.6 Charger

6.6.1 Characteristics

- Range of input voltage:3.9V~5.5V, PWM charger, supports single cell Li-battery
- High charge efficiency in fast charging mode:>90% @5V(VIN)_2A(I_{CHG})
- Pre-charge current settable($I_{PRE-CHG}$, reg8A[4:1]), default:128mA, range: 64mA~1024mA,step:64mA
- Fast charge current settable(I_{CHG}, reg8B[5:0]), default:1024mA, range: 0mA~3072mA,step:64mA
- Target charge voltage settable(V_{REG}, reg8C[7:2]), default:4.25V, range: 3.840V~4.608V, step:16mV
- Accuracy of target voltage:±0.5%(testing ambient temperature:25°C,target voltage:4.256V)

6.6.2 Charging condition

- VBUS is present and available, $V_{VBUS}>V_{BAT}+V_{SLEEPZ}$
- Input source detection finishes(reg00H[1]=1)
- Charging is enabled(reg8AH[7]=1)
- Die temperature is lower than T_{SHUT}
- When TS pin is used to detect battery temperature, battery temperature is within the chargeable range
- V_{BAT} is lower than V_{BAT_OVP}
- No charger safety timer fault
- BATFET is not forced to be off (BATFET_DIS bit, reg10H[7]=0)

6.6.3 Charging process

When BMU meets all charging conditions, it can complete the whole charging process without the participation of Host. The charging status can be known from the register bits reg00H[4:2]. The default values of charging parameters are shown as following. Host can modify registers to optimize the values through TWSI.

Table 6-1 Charging Parameter

Parameter	Default value
Charging voltage	4.208V
Charging current	1.024A
Pre-charging current	128mA
Termination current	128mA
Temperature profile	Cold/hot
Safety timer	12hours

1. Pre-charge

When V_{BAT} is lower than $V_{BATLOWV}$(reg8CH[1]), the charger is under pre-charge mode where charging current is limited to a value of $I_{PRE-CHG}$. Safety time is set through reg8EH[6:5] and its default value is 50 minutes. If pre-charge process times out, BMU will stop charging and send a corresponding IRQ to Host. The function of safety timer can be disabled through reg8EH[7].

2. Constant current charge

Once V_{BAT} is higher than $V_{BATLOWV}$ and lower than V_{REG}, the charger is under constant current charge mode. It will

Copyright©Shenzhen X-Powers Technology Co., Ltd. All Rights Reserved.

charge with constant current I_{CHG}.

3. Constant voltage charge

When V_{BAT} reaches target voltage(V_{REG}), the charger enters constant voltage charge mode. In this stage, the charger keeps the output voltage constant and step down charging current gradually, in order to fully charge battery.

When V_{BAT} is above V_{RECHG} and the charging current reduces under termination current(I_{TERM}), AXP515 reports charger done, stops charging(charger enable bit is still 1) and turns off BATFET. Meanwhile, IRQ is sent to Host. After the charging process is completed, a charging cycle can be started again by writing 0 to reg8AH[7] first and then writing 1.

When AXP515 is in regulation of input current, input voltage or temperature, the function of charging termination configured through reg8DH[7] is temporarily disabled and the speed of safety timer slows down. Whether to set safety timer during DPM or thermal regulation depends on reg8EH[4].

4. Re-charge

After charge done, if V_{BAT} falls below V_{RECHG}, BMU will automatically enable charger without reinserting adapter.

No matter whether V_{BAT} is above V_{RECHG} or not, the charger is enabled when an adapter is inserted.

5. Battery detection

As long as an AC adapter is present and usable, battery detection will be enabled to detect whether battery is connected. Battery detection function is enabled by default and can be disabled through reg8EH[3]. If the function is disabled, BMU considers that battery is always present. The detection result is saved in reg02H[4:3.]

6.6.4 Charging protection

1. charger safety timer

Once starting pre-charge mode, BMU will enable timer1. If BMU can not enter constant current charge mode from pre-charge within 50min(set through reg8EH[6:5]), BMU will enter battery safe mode and send IRQ to indicate the battery may be damaged.

When the charger enters into constant current charge mode, BMU will enable timer2. If BMU can not finish the whole charge cycle within 12 hours(set through reg8DH[2:1]), BMU will enter battery safe mode and send IRQ to indicate the battery may be damaged.

Timing speed of timer1 or timer2 is relevant with actual charge current. The smaller the actual charge current, the slower timing speed is.

2. Battery safe mode

In battery safe mode, the charger always charges with 10mA current. BMU can quit battery safe mode with one of the following methods:

- $V_{BAT}>V_{RECHG}$
- Adapter removal
- Charger enable bit(reg8AH[7]) is set to 0
- Safety timer1 enable bit(reg8EH[7]) or safety timer2 enable bit(reg8DH[0])is set to 0

3. BMU die temperature protection

AXP515 has built-in temperature protection function through ADC to monitor internal temperature.

Under charging mode, the temperature point of thermal regulation can be set through reg18H[7:6]. When die temperature rises up to the setting point, the charging current will be decreased to decrease heat. When thermal regulation works, actual charge current is lower than the setting value and thermal regulation status(reg02H[2]) is set to 1. If die temperature rises up to T_{SHUT}(140°C), the buck converter is disabled and BATFET is turned off. Then charge fault status(reg04H[5:4]) is set to "10" to indicate over temperature protection and IRQ is sent . When die temperature falls below hysteretic threshold(120°C), BATFET will not be turned on automatically.

Copyright©Shenzhen X-Powers Technology Co., Ltd. All Rights Reserved.

4. Battery temperature protection

AXP515 can monitor battery temperature, when TS pin is used to detect battery temperature and parallel with charger(reg81H[7]=0). The battery temperature sensitive resistor is connected between TS pin and GND. The suggestion resistance should be 10kΩ at 25°C ambient temperature. Through TS pin, BMU outputs constant current which can set through reg81H[2:1] to adapt different resistance. When the resistance is 10kΩ, the current should be set to 60uA. The enable bit of TS current source is configured through reg81H[4:3]. When current passes through the temperature sensitive resistor, BMU gets a detected voltage and calculates its value through ADC circuit. Take for example, TH11-3H103F temperature sensitive resistor of Mitsubishi Company. Using 60uA current source, the relationship among temperature, equivalent resistance, detected voltage and ADC data is as following.

Table 6-2 NTC ADC information

Temperature	equivalent resistance	detected voltage	ADC 12bit data
-16~-17°C	54.60Kohm	3.276V	FFFH
-15°C	50.15Hohm	3.009V	EB1H
-10°C	40.26Kohm	2.416V	BCCH
-5°C	32.55Kohm	1.953V	989H
0°C	26.49Kohm	1.481V	73BH
5°C	21.68Kohm	1.301V	65AH
10°C	17.78Kohm	1.067V	42AH
25°C	10.00Kohm	0.600V	2EEH
40°C	5.839Kohm	0.350V	1B5H
45°C	4.924Kohm	0.295V	170H
50°C	4.171Kohm	0.250V	138H
55°C	3.549Kohm	0.213V	10AH
60°C	3.032Kohm	0.182V	0E3H

During battery charging process, if TS pin voltage is lower than VHTF-CHG or higher than VLTF-CHG(VHTF-CHG and VLTF-CHG can be set through reg84H and reg85H. The default value of VLTF-CHG is set around 0°C and VHTF-CHG around 45°C), which indicates battery temperature is too high or too low, then the charger is paused and IRQ is sent to notify Host. When battery temperature is back to the normal range, the charger will recovery automatically.

During boost mode, if TS pin voltage is lower than VHTF-WORK or higher than VLTF-WORK(VHTF-WORK and VLTF-WORK can be set through reg86H and reg87H. The default value of VLTF-WORK is set around -10°C and VHTF-WORK around 55°C), which indicates battery temperature is too high or too low, then the boost is paused and IRQ is sent to notify Host. When battery temperature is back to the normal range, the boost will recovery automatically.

High temperature protection threshold hysteresis for VHTF-CHG and VHTF-WORK can be set through reg83H(default 50mV, ADC data 40H). Low temperature protection threshold hysteresis for VLTF-CHG and VLTF-WORK can be set through reg82H(default 300mV, ADC data 180H). The range of temperature detection can be expanded by adding more resistors.

Some battery may have no temperature sensitive resistor. Under this situation, TS pin can be pulled down to GND with a 10kΩ resistor externally or set as external input of ADC through register.

Use TS pin current source and obtain TS pin data according to the following table.

Table 6-3 TS source setting

Usage condition	setting

Copyright©Shenzhen X-Powers Technology Co., Ltd. All Rights Reserved.

Not need temperature protection	reg81H[7]=1
Temperature protection when in charger	reg81H[7]=0, reg81H[4:3]=01
Temperature protection when in charging and discharging	reg81H[7]=0, reg81H[4:3]=10
Use TS pin current source to drive other device	reg81H[4:3]=11 when need current source reg81H[4:3]=00 when not need current source

6.6.5 Charging indication

CHGLED pin uses open-drain/push-pull output method. It is internally pulled up to LDO. Its output drive capability is above 10mA. Detail function control is shown as the following table.

Table 6-4 CHGLED setting

REG90H[2:0]= 000 (Type A CHGLED) Open Drain	Hi-Z	No charging(conditions are not met or battery charged)
	25% 1Hz pull low/Hi-Z jump	Charger internal abnormal alarm(including timer out、die temperature over temperature、battery temperature out of charging range)
	25% 4Hz pull low/Hi-Z jump	Input source or battery over voltage
	Pull low	Charging
REG90H[2:0]= 001 (Type B CHGLED) Open Drain	Hi-Z	No VBUS, and power supply by battery
	25% 1Hz pull low/Hi-Z jump	Charging
	25% 4Hz pull low/Hi-Z jump	Alarm, including input source or battery over voltage, battery temperature out of charging range, timer out,die temperature over temperature
	Pull low	No battery or charge finished, and power supply by VBUS
REG90H[2:0]= 010 (Breath CHGLED) Open Drain	Hi-Z	No VBUS, and power supply by battery
	Breath LED output(*note1)	Charging
	Pull low	No battery or charge finished, and power supply by VBUS
REG90H[2:0]= 011 (Breath Lamp) Open Drain	Breath LED output, enable bit: REG90H[6] Breath frequency and luminance are controlled by REG91H~REG9AH	
REG90H[2:0]= 100 (Tri-state CHGLED) Push Pull	Hi-Z	No VBUS, and power supply by battery
	Pull high	Charging
	Pull low	No battery or charge finished, and power supply by VBUS
REG90H[2:0]= 101 (PWM function) Push Pull	PWM output, enable bit: REG90H[6] The frequency and duty-cycle are controlled by REG95H~99H	
REG90H[2:0]=110/111 (GPO)	The output status is controlled by REG90H[5:3]	

Copyright©Shenzhen X-Powers Technology Co., Ltd. All Rights Reserved.

Push Pull	

Note: LED is on when CHGLED is low.

6.7 BATFET

BATFET connects system and battery. The on-resistance is low to 30mohm(point to point).

6.7.1 Enter shipping mode

In order to increase the life of battery and reduce consumption during transportation, system is allowed to turn off BATFET automatically. When BMU is supplied by only battery, V_{SYS} is 0 after BATFET is turned off, which can make the leakage voltage minimum. There are some ways to turn off BATFET to enter shipping mode. Reg00[0] can indicate BATFET status.

BATFET off sources:

- Write "1" to reg10H[7]. Force BATFET off, highest priority.
- Charge done
- VBUS present but charger disabled(reg8AH[7]=0)

6.7.2 Exit shipping mode

BATFT can be enabled again with the following method.

- PWRON key is low for longer than ONLEVEL

6.8 Boost mode

AXP515 supports boost mode which can provide current from battery to VBUS pin. The boost mode can be enabled when the following conditions are met.

- V_{BAT} is higher than $V_{BATLOWV}$.
- V_{VBUS} is lower than $V_{BAT}+V_{SLEEP}$.
- Boost enable register, (reg12H[7]]=1)||(reg23H[5]=1 & OTG device plugs in).
- Battery temperature is in charging range.
- Die temperature is below T_{SHUT}.

In boost mode, the output voltage can be set through reg13H[7:4]. Moreover, output current limit function can be realized through RBFET. The current limit value is set through reg13H[1:0]. The switch frequency of boost converter is 1.5MHz which can not be changed. The maximum output current is up to 1.5A. The efficiency is 90% @3.5V_5V_1A.

There are OCP function and OVP function in boost mode. When over current or over voltage occurs, boost converter will be turned off and IRQ will be sent to Host.

In boost mode, if reg11H[6] is set to 0, BMU pulls down VBUS to avoid VBUS voltage rising due to electric leakage. If reg11H[6] is set to 1, it means the path from VMID and VBUS is available and it is prohibited to pull down VBUS.

When charging conditions are met, boost converter will be disabled and then charger will be enabled

6.9 RBFET

RBFET connects VMID and VBUS. The on-resistance is low to 30mohm(point to point). It supports input and output current limit function. In charger mode, the input current limit value of RBFET is set through reg10H[5:0]. In boost mode, the output current limit value of RBFET is set through reg13H[1:0].

Copyright©Shenzhen X-Powers Technology Co., Ltd. All Rights Reserved.

6.10 ADC

AXP515 has a low speed 12Bit SAR ADC for measuring BAT voltage, BAT charge current and BAT discharge current, TS voltage and die temperature. No IRQ for ADC output. The ADC sampling frequency can be set to 800/400/200/100Hz. Channel 2 is fixed to 25Hz.

Table 6-5 ADC information

No.	Channel function	000H	001H	002H	…	FFFH
0	BAT voltage	0mV	1.2mV	2.4mV	…	4.914V
1	Reserved					
2	Die temperature	-267.7°C	+0.10625*xxxH (°C)			167.4°C
3	BAT charge current	0mA	2mA	4mA	…	8.160A
4	BAT discharge current	0mA	2mA	4mA	…	8.160A
5	TS pin input	0mV	0.8mV	1.6mV	…	3.276V

Note: ADC data is 12 bits. In order to get the complete data, TWSI must read the high 8 bits firstly and then the low 4 bits.

6.11 E-Gauge

The Fuel Gauge comprises of 3 modules: Rdc calculation module; OCV (Open Circuit Voltage) and Coulomb counter module; and calibration module. The Fuel Gauge system is able to export information about battery such as Battery capacity percentage (regB9H), Battery Voltage (reg78H, reg79H), Battery charging current (reg7AH, reg7BH), Battery discharge current (reg7CH, reg7DH), Battery maximum capacity (regE0H, regE1H), Battery Rdc value (regBAH, regBBH). The Fuel Gauge can be enabled or disabled through regB8H. The Battery low warning level can be set in regE6H, and IRQ will be sent out to alert the platform when the battery capacity percentage is lower than the warning level set in regE6H.

Once a default battery is selected for a particular design, it is highly recommended to calibrate the battery to achieve better Fuel Gauge accuracy. Once the calibration data are available, user can write the calibration information to regC0H ~regDFH (OCV percentage table) on each boot. Or user can choose not to do the calibration and use the default OCV percentage value. Additionally, the Fuel Gauge system is capable to learn the battery characteristic on each full charge cycle.Information such as battery maximum capacity (regE0H, regE1H) and Rdc (regBAH, regBBH) will be updated automatically over time.

6.12 IRQ, LDO

6.12.1 IRQ

AXP515 has an IRQ pin which is used to indicate whether there interrupt events occur.

BMU Interrupt Controller monitors the trigger events such as over voltage, over current, PWRON pin signal, over temperature and so on. When the events occur and their IRQ enabled bits are set to 1 (Refer to registers reg40H/41H/42H/43H/44H/45H), corresponding IRQ status will be set to 1 (Refer to registers reg48H/49H/4AH/4BH/4CH/4DH), and IRQ pin will be pulled down. When Host detects triggered IRQ signal, Host will scan through the IRQ Status registers and respond accordingly. Meanwhile, Host will reset the IRQ status by writing "1" to status bit.

When reg17H[4] is set to 1, IRQ pin can be used as power on source.

6.12.2 LDO

AXP515 has a LDO output. Its features are shown as follows.

- Output voltage: 1.8V

Copyright©Shenzhen X-Powers Technology Co., Ltd. All Rights Reserved.

- IMAX=20mA, Vdropout=0.4V

6.13 Type-C

AXP515 supports Type-C cc logic and DRP.

When BMU is powered from battery, if type-c device is inserted, BMU set in DRP mode can detect device insertion through CC pin and distinguish each side of plug. The detection result is saved in reg37H[3:0] and IRQ is sent to Host.

If the type-c device is DFP, BMU will switch to UFP mode and set I_{INDPM}, waiting for VBUS.

If the type-c device is UFP, BMU will switch to DFP mode, and then enable boost converter and turn on RBFET to supply power to VBUS. When UFP device is removed, BMU can detect device removal through CC pin and turn off RBFET. Whether to disable boost mode depends on application scenarios. Function of automatically turning on boost converter and RBFET can be disabled through reg23H[5].

6.14 Register

6.14.1 Register List

Address	Description	R/W	Default
00	BMU status1	R	
01	BMU status2	R	
02	BMU status3	R	
04	BMU status4	R	
05	BMU status5	R	
06	System power on/off source indication	RW	00H
10	BATFET & input current limit control	RW	48H
11	BATFET & RBFET & input voltage limit control	RW	06H
12	Boost & minimum system voltage control	RW	6DH
13	Boost voltage & RBFET current limit control	RW	94H
14	WATCHDOG timer setting & register reset & system status	RW	00H
15	POK setting	RW	69H
16	System power on/off control1	RW	10H
17	System power on/off control2	RW	00H
18	Thermal regulation threshold setting	RW	89H
20	BC1.2 detection control1	RW	20H
21	BC1.2 detection control2	RW	20H
22	BC1.2 detection control3	RW	02H
23	DPDM & CC enable control	RW	70H
31	CC_GLOBAL_CTRL	RW	09H
33	CC_MODE_CTRL	RW	11H
34	CC_TOGGLE_CTRL	RW	00H
37	CC_Status0	R	00H
3A	CC_Status1	R	00H
40	IRQ Enable1	RW	06H

Copyright©Shenzhen X-Powers Technology Co., Ltd. All Rights Reserved.

Address	Description	R/W	Default
41	IRQ Enable2	RW	FFH
42	IRQ Enable3	RW	FFH
43	IRQ Enable4	RW	00H
44	IRQ Enable5	RW	F4H
45	IRQ Enable6	RW	C6H
48	IRQ Status1	RW	00H
49	IRQ Status2	RW	00H
4A	IRQ Status3	RW	00H
4B	IRQ Status4	RW	00H
4C	IRQ Status5	RW	00H
4D	IRQ Status6	RW	00H
56	BMU Internal temperature ADC data, high 8 bits	R	00H
57	BMU Internal temperature ADC data, low 4 bits	R	00H
58	Ts pin ADC data, high 8bits	R	00H
59	Ts pin ADC data, low 4 bits	R	00H
78	Average data bit[11:4] for Battery voltage	R	00H
79	Average data bit[3:0] for Battery voltage	R	00H
7A	Average data bit[11:4] for Battery charge current	R	00H
7B	Average data bit[3:0] for Battery charge current	R	00H
7C	Average data bit[11:4] for Battery discharge current	R	00H
7D	Average data bit[3:0] for Battery discharge current	R	00H
80	ADC Enable	RW	F2H
81	TS pin CTRL & ADC speed setting	RW	0CH
82	TS_HYSL2H setting	RW	18H
83	TS_HYSH2L setting	RW	04H
84	VLTF_CHG setting	RW	74H
85	VHTF_CHG setting	RW	17H
86	VLTF_WORK setting	RW	BDH
87	VHTF_WORK setting	RW	11H
8A	Charger control1	RW	82H
8B	Charger control2	RW	10H
8C	Charger control3	RW	6AH
8D	Charger control4	RW	8DH
8E	Charger control5	RW	B0H
90	CHGLED pin function setting	RW	00H
91	Breath function control1	RW	64H
92	Breath function control2	RW	01H
93	Breath function control3	RW	06H
94	Breath function control4	RW	01H

Copyright©Shenzhen X-Powers Technology Co., Ltd. All Rights Reserved.

Address	Description	R/W	Default
95	Breath function control5	RW	64H
96	Breath function control6	RW	00H
97	PWM output frequency setting	RW	64H
98	Breath function control7 & Input clock frequency for PWM output	RW	16H
99	PWM function duty setting	RW	32H
9A	CHGLED breath time unit option	RW	65H
B8	Fuel Gauge Control	RW	C0H
B9	Battery capacity percentage for indication	R	64H
BA	RDC 1	RW	80H
BB	RDC 0	RW	55H
BC	OCV 1	R	00H
BD	OCV 0	R	00H
C0	OCV percentage table	RW	00H
C1	OCV percentage table	RW	00H
C2	OCV percentage table	RW	01H
C3	OCV percentage table	RW	02H
C4	OCV percentage table	RW	04H
C5	OCV percentage table	RW	06H
C6	OCV percentage table	RW	08H
C7	OCV percentage table	RW	0AH
C8	OCV percentage table	RW	0CH
C9	OCV percentage table	RW	0FH
CA	OCV percentage table	RW	12H
CB	OCV percentage table	RW	17H
CC	OCV percentage table	RW	1DH
CD	OCV percentage table	RW	23H
CE	OCV percentage table	RW	29H
CF	OCV percentage table	RW	2FH
D0	OCV percentage table	RW	34H
D1	OCV percentage table	RW	38H
D2	OCV percentage table	RW	3FH
D3	OCV percentage table	RW	46H
D4	OCV percentage table	RW	4CH
D5	OCV percentage table	RW	4FH
D6	OCV percentage table	RW	52H
D7	OCV percentage table	RW	55H
D8	OCV percentage table	RW	57H
D9	OCV percentage table	RW	59H

Copyright©Shenzhen X-Powers Technology Co., Ltd. All Rights Reserved.

Address	Description	R/W	Default
DA	OCV percentage table	RW	5BH
DB	OCV percentage table	RW	5DH
DC	OCV percentage table	RW	5FH
DD	OCV percentage table	RW	61H
DE	OCV percentage table	RW	62H
DF	OCV percentage table	RW	63H
E0	Battery maximum capacity	RW	00H
E1	Battery maximum capacity	RW	00H
E2	Coulomb meter counter	RW	00H
E3	Coulomb meter counter	RW	00H
E4	OCV Percentage of battery capacity	R	64H
E5	Coulombmeter percentage of battery capacity	R	64H
E6	Battery capacity percentage warning level	RW	A0H
E7	OCV_SOC curve setting	RW	0FH
E8	Fuel gauge tuning control 0	RW	00H
E9	Fuel gauge tuning control 1	RW	00H
EA	Fuel gauge tuning control 2	RW	00H
EB	Fuel gauge tuning control 3	RW	00H
EC	Fuel gauge tuning control 4	RW	00H
ED	Fuel gauge tuning control 5	RW	00H
EE	Fuel gauge tuning control 6	RW	01H
EF	Fuel gauge tuning control 7	RW	00H

6.14.2 Register Description

6.14.2.1 REG 00H: BMU status1

Reset: power on reset

Bit	Description	R/W
7-5	Reserved	R
4-2	Charging status 000: not charging 001: tri_charge 010: pre_charge 011: fast charging 100: constant voltage(CV) 101: charge termination done others: not used	R
1	VBUS good status(VBUS_GD) 0: not power good 1: power good	R
0	BATFET status	R

Copyright©Shenzhen X-Powers Technology Co., Ltd. All Rights Reserved.

	0: BATFET is off state 1: BATFET is on state	

6.14.2.2 REG 01H: BMU status2

Reset：Power on reset

Bit	Description	R/W
7-5	USB BC1.2 Detection result 000 : Reserved 001 : SDP 010 : CDP 011 : DCP 100 : ACA – Dock 101 : ACA-A 110 : ACA-B 111 : ACA-C	R
4-0	Reserved	R

6.14.2.3 REG 02H: BMU status3

Reset: Power on reset

Bit	Description	R/W
7	VINDPM status 0: not in VINDPM 1: VINDPM	R
6	IINLIM status 0: Not in current limit 1: In current limit	R
5	charge system voltage status 0: Not over voltage 1: over voltage	R
4	battery detection result valid status : 0: Battery detection result is invalid; 1: Battery detection result is valid.	R
3	battery detection result: 0: Battery is absent; 1: Battery is present.	R
2	thermal regulation status 0: Normal 1: In thermal regulation	R
1	VBUS good status (indicate whether VBUS attached or not). 0: Not VBUS attached 1: VBUS attached	R
0	Battery current direction 0: Discharging 1: Charging	R

Copyright©Shenzhen X-Powers Technology Co., Ltd. All Rights Reserved.

6.14.2.4 REG 04H: BMU status4

Reset: Power on reset

Bit	Description	R/W
7	Watchdog fault status 0: Normal 1: Watchdog timer expiration	R
6	Boost mode fault status 0: Normal 1: VBUS overload in OTG, or VBUS OVP, or battery is too low in boost mode	R
5-4	Charge fault status 00: Normal 01: Input fault(VBUS>VACOV or VBAT<VBUS<VBUSMIN(typical 3.8V) 10: Thermal shutdown 11: Charge safety timer expiration	R
3	Battery fault status(OVP) 0: Normal 1: BATOVP(VBAT>VBATOVP)	R
2-0	NTC fault status buck mode: 000: Normal 001: TS cold 010: TS hot boost mode: 000: Normal 101: TS cold 110: TS hot	R

6.14.2.5 REG 05H: BMU status5

Reset: Power on reset

Bit	Description	R/W
7	PMIC have calibrated the OCV-percentage curve 0: have not calibrated 1: have calibrated	R
6	PMIC have calibrated the total battery capacity 0: have not calibrated 1: have calibrated	R
5-0	Reserved	R

6.14.2.6 REG 06H: System power on/off source indication

Reset: Power on reset

Bit	Description	R/W
7	System power on from VBUS insertion status indication. 0: Negative	R

Copyright©Shenzhen X-Powers Technology Co., Ltd. All Rights Reserved.

	1: Active	
6	System power on from Battery insertion status indication 0: Negative 1: Active	R
5	System power on from Battery charge to normal status indication 0: Negative 1: Active	R
4	System power on from IRQ pin status indication 0: Negative 1: Active	R
3	Reserved	R
2	System power off from watch dog timeout status indication 0: Negative 1: Active	R/W
1	Reserved	R
0	System power off from software status indication 0: Negative 1: Active	R/W

6.14.2.7 REG 10H: BATFET & input current limit control

Default: 48H

Reset: power on reset

Bit	Description	R/W	Default
7	Force BATFET off to enable ship mode 0: allow BATFET turn on 1: force BATFET off	RW	0
6	Reserved	R	1
5-0	Input current limit(IINLIM) offset: 100mA range:100mA(000000)--3.25A(111111) default:001000(500mA) step:50mA IINLIM bits are changed automatically after input source type detection is completed USB SDP=500mA USB CDP/DCP=1.5A USB Type-C Current@3.0A = 3.0A USB Type-C Current@1.5A = 1.5A Others=1.5A	RW	001000

6.14.2.8 REG 11H: BATFET & RBFET & input voltage limit control

Default: 06H

Reset: bit[6]&[4] are system reset, others are power on reset

Bit	Description	R/W	Default

Copyright©Shenzhen X-Powers Technology Co., Ltd. All Rights Reserved.

7	Set BATFET to forced on state. 0: allow BATFE to turn off. 1: force BATFE on.	RW	0
6	Set RBFET to forced on state in OTG mode 0: RBFET at off state, used for power bank 1: RBFET at on state, used for type-C VBUS power output	RW	0
5	Adjust VBUS over-voltage threshold setting(manual setting for apple adapter) 0: VBUS_OV=6.4V 1: VBUS_OV=6.8V	RW	0
4	OTG path can be selected or not: 0: OTG path can not be selected by software. 1: OTG path can be selected whatever, disable VBUS path.	RW	0
3-0	VINDPM threshold offset: 3.88V range: 3.88V(0000)--5.08V(1111) default: 4.36V(0110) step: 80mV	RW	0110

6.14.2.9 REG 12H: Boost & minimum system voltage control

Default: 2DH

Reset: bit[3] is power on reset, others are system reset

Bit	Description	R/W	Default
7	Boost(OTG)mode configuration(BOOST_EN) 0: OTG disable 1: OTG enable	RW	0
6	Reserved	R	0
5	Whether disable boost or not when VOUT is over voltage in boost mode. 0: Not disable boost mode 1: Disable boost mode	RW	1
4	Whether disable boost or not when VOUT is over current in boost mode. 0: Not disable boost mode 1: Disable boost mode	RW	0
3	The output voltage when RBFET is working in LDO mode. 0: 5.2V 1: 5.5V		1
2-0	minimum system voltage limit(VSYS_min) offset: 3.0V range: 3.0V--3.7V default: 3.5V step: 0.1V	RW	101

Copyright©Shenzhen X-Powers Technology Co., Ltd. All Rights Reserved.

6.14.2.10 REG 13H: Boost voltage & RBFET current limit control

Default: 94H

Reset: bit[3-2] are power on reset, others are system reset

Bit	Description	R/W	Default
7-4	Boost mode voltage regulation(low voltage range) offset: 4.55V range: 4.55V--5.51V default: 5.126V step: 64mV	RW	1001
3-2	Boost mode disable threshold(Vbat_low) 00: 2.4V 01: 2.6V 10: 2.8V 11: 3.0V	RW	01
1-0	RBFET current limit in BOOST mode. 00: 500mA 01: 900mA 10:1500mA 11: Disable current limit	RW	00

6.14.2.11 REG 14H: WATCHDOG timer setting & register reset & system status

Default: 00H

Reset: bit[3-0] are power on reset, others are system reset

Bit	Description	R/W	Default
7	Watchdog timer reset 0: normal 1: reset(back to 0 after timer reset)	RW	0
6-4	Watchdog timer setting 000: disable watchdog timer 001: 1s 010: 2s 011: 4s 100: 8s 101: 40 110: 80s	RW	000
3	Register reset 0: keep current register setting 1: reset to default register value and reset safety timer note: the bit will reset to 0 after register reset is completed	RW	0
2-1	Reserved		
0	System status indication: 0: System is power off. 1: System is power on.	R	0

Copyright©Shenzhen X-Powers Technology Co., Ltd. All Rights Reserved.

6.14.2.12 REG 15H: POK setting

Default: 69H

Reset: power on reset

Bit	Description	R/W	Default
7-6	IRQLEVEL setting 00 : 1s 01 : 1.5s 10 : 2s 11 : 2.5s	RW	01
5-4	PORELVEL setting 00 : 4s 01 : 8s 10 : 12s 11 : 16s	RW	10
3-2	ONLEVEL setting 00: 128ms 01 : 512ms 10 : 1s 11 : 2s	RW	10
1-0	OFFLEVEL setting 00 : 4.5s 01 : 6.5s 10 : 8.5s 11 : 10.5s	RW	01

6.14.2.13 REG 16H: System power on/off control1

Default: 10H

Reset: power on reset

Bit	Description	R/W	Default
7-6	PWRON output type setting: 00: Pull down for ONLEVEL 01:Special sequence 10: High/Low level(inhibit PWRON input function),active level depend on REG16[2]. 11: Inhibit output function	RW	00
5-4	Delay time to turn off BATFET through BATET_DIS function 00:0ms 01:8ms 10:16ms 11:32ms	RW	01
3	Reserved	R	0
2	Active level when PWRON is set as high/low level output: 0: Low level active 1: High level active	RW	0

Copyright©Shenzhen X-Powers Technology Co., Ltd. All Rights Reserved.

1	Reserved	R	0
0	System power off clear the IRQ signal enable 0: Does not clear the IRQ signal 1: Clear the IRQ signal	RW	0

6.14.2.14 REG 17H: System power on/off control2

Default: 00H

Reset: power on reset

Bit	Description	R/W	Default
7	VBUS insertion send power on signal enable: 0: Does not send power on signal 1: Send power on signal	RW	0
6	Battery insertion send power on signal enable: 0: Does not send power on signal 1: Send power on signal	RW	0
5	Battery charge to normal send power on signal enable: 0: Does not send power on signal 1: Send power on signal	RW	0
4	IRQ pin low level send power on signal enable 0: Do not send power on signal 1: Send power on signal	RW	0
3	Reserved	R	0
2	Watch dog time out send power off signal enable 0: Does not send power off signal 1: Send power off signal	RW	0
1	Reserved	R	0
0	Software send power off signal enable 0: Does not send power off signal 1: Send power off signal, then clear itself automatically.	RW	0

6.14.2.15 REG 18H: Thermal regulation threshold setting

Default: 89H

Reset: power on reset

Bit	Description	R/W	Default
7-6	Thermal regulation threshold 00: 60deg 01: 80deg 10: 100deg 11: 120deg	RW	10
5-0	Reserved	R	001001

6.14.2.16 REG 20H: BC1.2 detection control1

Default: 20H

Reset: power on reset

Copyright©Shenzhen X-Powers Technology Co., Ltd. All Rights Reserved.

Bit	Description	R/W	Default
7	DCD Detection enable during BC detect. 0 : disable 1 : enable	RW	0
6-5	DCD Detection time setting when DCD function enable 00 : 100ms 01 : 300ms 10 : 500ms 11 : 900ms	RW	01
4	The DM VLGC Compare enable during the BC Detect in primary detection 0 : disable 1 : enable	RW	0
3	The BC stays in dead battery status timeout enable when the battery voltage below the dead threshold. 0 : disable 1 : enable Note : the time is 45 min	RW	0
2	BC detection status indication 0 : detect finish 1 : in detecting	R	0
1-0	Reserved	R	0

6.14.2.17 REG 21H: BC1.2 detection control2

Default: 20H

Reset: power on reset

Bit	Description	R/W	Default
7-6	Reserved	R	0
5	DP/DM floating Detection enable when BC detection is not DCP and CDP. 0 : disable 1 : enable	RW	1
4-0	Reserved	R	0

6.14.2.18 REG 22H: BC1.2 detection control3

Default: 02H

Reset: power on reset

Bit	Description	R/W	Default
7	Reserved	R	0
6	Dead Battery detection enable. 0 : disable 1 : enable. Note : if the battery is not connect, this function will disable.	RW	0
5	Reserved	R	0

Copyright©Shenzhen X-Powers Technology Co., Ltd. All Rights Reserved.

4	The control bit for pull up the DP to 0.6V when detection result is DCP 0 : disable 1 : enable	RW	0
3-2	Reserved	R	0
1	Control bit for CC clock 0 : disable 1 : enable	RW	1
0	Reserved	R	0

6.14.2.19 REG 23H: DPDM & CC enable control

Default: 70H

Reset: power on reset

Bit	Description	R/W	Default
7	Force DP/DM detection 0: Not in DP/DM 1: Force DP/DM detection Note : This bit will clear itself.	RW	0
6	automatic DP/DM detection enable(AUTO_DPDM_EN) 0: disable DP/DM when VBUS is plugged-in 1: enable DP/DM when VBUS is plugged-in	RW	1
5	Automatic enable boost and RBFET control: 0: Disable auto control 1: Enable auto control	RW	1
4	automatic CC PIN detection enable(AUTO_CC_EN) 0: disable CC PIN detection when VBUS is plugged-in 1: enable CC PIN detection when VBUS is plugged-in(default)	RW	1
3-0	Reserved	R	0

6.14.2.20 REG 31H: CC_GLOBAL_CTRL

Default: 09H

Reset: power on reset

Bit	Description	R/W	Default
7-6	Reserved	R	0
5	Audio Accessory Enable. 0: disable 1: enable	RW	0
4	Reserved	RW	0
3	The Configuration Reset for CC Logic. 0: reset 1: disable	RW	1
2-0	Reserved	R	001

6.14.2.21 REG 33H:CC_MODE_CTRL

Default: 11H

Copyright©Shenzhen X-Powers Technology Co., Ltd. All Rights Reserved.

Reset: power on reset

Bit	Description	R/W	Default
7	Reserved	R	0
6	The Current mode of UFP support 0: UFP support current mode of def/1.5A/3.0A 1: UFP only support current mode of def	RW	0
5	DRP port prefer to be SRC. 0: unactive 1: active	RW	0
4	DRP port prefer to be SNK. 0: unactive 1: active	RW	1
3-2	The Current Mode Control. 0x: Default Mode 10: 1.5A Mode 11: 3.0A Mode	RW	00
1-0	The Port Mode Control. 00: Disable 01: SINK 10: SOURCE 11: DRP	RW	01

6.14.2.22 REG 34H: CC_TOGGLE_CTRL

Default: 00H

Reset: power on reset

Bit	Description	R/W	Default
7-1	Reserved	R	0
0	Toggle Function Enable 0: disable 1: enable	RW	0

6.14.2.23 REG 37H: CC_Status0

Default: 00H

Reset: power on reset

Bit	Description	R/W
7-6	Reserved	R
5-4	The Power State of Source of CC Logic in HW mode 00: POWER IDLE 01: POWER_DEF 10: POWER_1P5A 11: POWER_3P0A	R
3-0	The State of CC Logic in HW mode 0000: DISABLE 0001: UNATTACH_SNK	R

Copyright©Shenzhen X-Powers Technology Co., Ltd. All Rights Reserved.

	0010: ATTACHWAIT_SNK 0011: ATTACH_SNK 0100: UNATTACH_SRC 0101: ATTACHWAIT 0110: ATTACH_SRC 0111: AUDIO_ACSY 1000: Reserved 1001: TRY_SRC 1010: TRYWAIT_SNK 1011: TRY_SNK 1100: TRYWAIT_SRC 1101: Reserved 1110: ERROR_RECOVERY 1111: Reserved	

6.14.2.24 REG 3AH: CC_Status1

Default: 00H

Reset: power on reset

Bit	Description	R/W
7	Reserved	R
6	Awake Mode Status in HW mode 0: SINK or DRP in SINK 1: SOURCE or DRP in SOURCE	R
5	Awake Finish Flag in HW mode 0: unactive 1: active	R
4-0	Reserved	R

6.14.2.25 REG 40H: IRQ Enable1

Default: 06H

Reset: power on reset

Bit	Description	R/W	Default
7	Battery capacity percentage drop to warning level2 IRQ(WL2IRQ) enable	RW	0
6	Battery capacity percentage drop to warning level1 IRQ(WL1IRQ) enable	RW	0
5	Battery capacity percentage change IRQ enable	RW	0
4	Gauge calculation complete IRQ enable	RW	0
3	battery detection complete IRQ enable	RW	0
2	Boost mode over voltage protection IRQ enable	RW	1
1	Boost mode over current protection IRQ enable	RW	1
0	Reserved	RW	0

6.14.2.26 REG 41H: IRQ Enable2

Default: FFH

Reset: power on reset

Copyright©Shenzhen X-Powers Technology Co., Ltd. All Rights Reserved.

Bit	Description	R/W	Default
7	Battery over temperature in charge mode IRQ (BCOTIRQ) enable	RW	1
6	Quit Battery over temperature in charge mode IRQ (QBCOTIRQ) enable	RW	1
5	Battery under temperature in charge mode IRQ (BCUTIRQ) enable	RW	1
4	Quit Battery under temperature in charge mode IRQ (QBCUTIRQ) enable	RW	1
3	Battery over temperature in work mode IRQ (BWOTIRQ) enable	RW	1
2	Quit Battery over temperature in work mode IRQ (QBWOTIRQ) enable	RW	1
1	Battery under temperature in work mode IRQ (BWUTIRQ) enable	RW	1
0	Quit Battery under temperature in work mode IRQ (QBWUTIRQ) enable	RW	1

6.14.2.27 REG 42H: IRQ Enable3

Default: FFH

Reset: power on reset

Bit	Description	R/W	Default
7	VBUS insertion IRQ enable	RW	1
6	VBUS removal IRQ enable	RW	1
5	Battery insertion IRQ enable	RW	1
4	Battery removal IRQ enable	RW	1
3	Dead/Weak Battery charge to normal IRQ enable(The voltage threshold is as same as VSYS_min)	RW	1
2	Die over temperature IRQ enable	RW	1
1	Charger safety timer1/2 timeout and battery enters safe mode IRQ enable	RW	1
0	VBUS over voltage protection IRQ enable	RW	1

6.14.2.28 REG 43H: IRQ Enable4

Default: 00H

Reset: power on reset

Bit	Description	R/W	Default
7	PWRON short press IRQ enable(PWRON push down longer than 32ms, and less than IRQLEVEL)	RW	0
6	PRWON long press IRQ enable(PWRON push down longer than IRQLEVEL, and less than Power-on-reset time)	RW	0
5	PWRON negative edge IRQ enable(PWRON from high go low)	RW	0
4	PWRON positive edge IRQ enable(PWRON from low go high)	RW	0
3-0	Reserved	R	0

6.14.2.29 REG 44H: IRQ Enable5

Default: F4H

Reset: power on reset

Bit	Description	R/W	Default
7	Charger begin charging IRQ enable	RW	1

Copyright©Shenzhen X-Powers Technology Co., Ltd. All Rights Reserved.

6	Battery charge done IRQ enable	RW	1
5	BC1.2 detect finished IRQ enable	RW	1
4	BC1.2 detect result change IRQ enable	RW	1
3	Reserved	R	0
2	BAT over voltage protection IRQ enable	RW	1
1-0	Reserved	R	0

6.14.2.30 REG 45H: IRQ Enable6

Default: C6H

Reset: power on reset

Bit	Description	R/W	Default
7	Type-C device removed (unattached) IRQ enable	RW	1
6	Type-C device insert and detection finished IRQ enable	RW	1
5-3	Reserved	R	000
2	Type-C error generated IRQ enable	RW	1
1	Type-C power state changed IRQ enable	RW	1
0	Reserved	R	0

6.14.2.31 REG 48H: IRQ Status1

Default: 00H

Reset: power on reset

Bit	Description	R/W	Default
7	Battery capacity percentage drop to warning level2 IRQ(WL2IRQ) status. Writing 1 to this bit ,or percentage rise up the level2, or no battery connect will clear it.	RW	0
6	Battery capacity percentage drop to warning level1 IRQ(WL1IRQ) status. Writing 1 to this bit , or percentage rise up the level1, or no battery connect will clear it.	RW	0
5	Battery capacity percentage change IRQ status. Writing 1 to this bit, or no battery connect will clear it.	RW	0
4	Gauge calculation complete IRQ status. Writing 1 to this bit, or no battery connect, or Gauge disable will clear it.	RW	0
3	battery detection complete IRQ status. Writing 1 to this bit will clear it.	RW	0
2	Boost mode over voltage protection IRQ status. "1" is active, writing 1 to this bit will clear it.	RW	0
1	Boost mode over current protection IRQ status. "1" is active, writing 1 to this bit will clear it.	RW	0
0	Reserved	RW	0

6.14.2.32 REG 49H: IRQ Status2

Default: 00H

Reset: power on reset

Copyright©Shenzhen X-Powers Technology Co., Ltd. All Rights Reserved.

Bit	Description	R/W	Default
7	Battery over temperature in charge mode IRQ (BCOTIRQ) status. Writing 1 to this bit, or temperature go to normal will clear it.	RW	0
6	Quit Battery over temperature in charge mode IRQ (QBCOTIRQ) status. Writing 1 to this bit, or battery temperature rise to over temperature will clear it.	RW	0
5	Battery under temperature in charge mode IRQ (BCUTIRQ) status. Writing 1 to this bit, or temperature go to normal will clear it.	RW	0
4	Quit Battery under temperature in charge mode IRQ (QBCUTIRQ) status. Writing 1 to this bit, or battery temperature drop to under temperature will clear it.	RW	0
3	Battery over temperature in work mode IRQ (BWOTIRQ) status. Writing 1 to this bit, or temperature go to normal will clear it.	RW	0
2	Quit Battery over temperature in work mode IRQ (QBWOTIRQ) status. Writing 1 to this bit, or battery temperature rise to over temperature will clear it	RW	0
1	Battery under temperature in work mode IRQ (BWUTIRQ) status. Writing 1 to this bit, or temperature go to normal will clear it.	RW	0
0	Quit Battery under temperature in work mode IRQ (QBWUTIRQ) status. Writing 1 to this bit, or battery temperature drop to under temperature will clear it.	RW	0

6.14.2.33 REG 4AH: IRQ Status3

Default: 00H

Reset: power on reset

Bit	Description	R/W	Default
7	VBUS insertion IRQ status, Writing 1 to this bit , or VBUS Remove will clear it.	RW	0
6	VBUS removal IRQ status. Writing 1 to this bit, or VBUS insert will clear it.	RW	0
5	Battery insertion IRQ status. Writing 1 to this bit, or Battery remove will clear it.	RW	0
4	Battery removal IRQ status. Writing 1 to this bit, or Battery insert will clear it.	RW	0
3	Dead/Weak Battery charge to normal IRQ(The voltage threshold is as same as VSYS_min) status.Writing 1 to this bit, or no battery connect will clear it.	RW	0
2	Die over temperature IRQ status. Writing "1" , or the temperature drop to the normal will clear it.	RW	0
1	Charger safety timer1/2 timeout and battery enters safe mode IRQ status. Writing "1" will clear it.	RW	0
0	VBUS over voltage protection IRQ status. Writing "1" or VBUS turn to normal will clear it.	RW	0

6.14.2.34 REG 4BH: IRQ Status4

Default: 00H

Copyright©Shenzhen X-Powers Technology Co., Ltd. All Rights Reserved.

Reset: power on reset

Bit	Description	R/W	Default
7	PWRON short press IRQ status. Writing 1 to this bit, or system shutdown will clear it	RW	0
6	PWRON long press IRQ status. Writing 1 to this bit, or system shutdown will clear it	RW	0
5	PWRON negative edge IRQ status. Writing 1 to this bit , or system shutdown will clear it.	RW	0
4	PWRON positive edge IRQ status. Writing 1 to this bit, or system shutdown , or QON negative will clear it.	RW	0
3-0	Reserved	R	0

6.14.2.35 REG 4CH: IRQ Status5

Default: 00H

Reset: power on reset

Bit	Description	R/W	Default
7	Charger begin charging IRQ status. Writing 1 to this bit, or charger charge done, or charging stop will clear it.	RW	0
6	Battery charge done IRQ status. Writing 1 to this bit, or charger charging will clear it.	RW	0
5	BC1.2 detect finished IRQ status. Writing 1 to this bit , or VBUS remove , or bc1.2 detect again will clear it.	RW	0
4	BC1.2 detect result change IRQ status. Writing 1 to this bit , or VBUS remove will clear it.	RW	0
3	Reserved	R	0
2	BAT over voltage protection IRQ status. Writing "1" or VBAT turn to normal will clear it.	RW	0
1-0	Reserved	R	0

6.14.2.36 REG 4DH: IRQ Status6

Default: 00H

Reset: power on reset

Bit	Description	R/W	Default
7	Type-C device removed (unattached) IRQ status. Writing 1 to this bit , or type C insert will clear it.	RW	0
6	Type-C device insert and detection finished IRQ status. Writing 1 to this bit , or type C remove will clear it.	RW	0
5-3	Reserved	R	0
2	Type-C error generated IRQ status. Writing 1 to this bit will clear it.	RW	0
1	Type-C power state changed IRQ status. Writing 1 to this bit will clear it.	RW	0
0	Reserved	R	0

6.14.2.37 REG 56H: BMU Internal temperature ADC data, high 8 bits

Default: 00H

Copyright©Shenzhen X-Powers Technology Co., Ltd. All Rights Reserved.

Reset: power on reset

Bit	Description	R/W	Default
7-0	BMU Internal temperature ADC data high 8 bits	RW	0

6.14.2.38 REG 57H: BMU Internal temperature ADC data, low 4 bits

Default: 00H

Reset: power on reset

Bit	Description	R/W	Default
7-0	BMU Internal temperature ADC data low 4 bits (Unit: 0.10625°C，temp=-267.7°C+0.10625°C*xxxH)	RW	0

6.14.2.39 REG 58H: Ts pin ADC data, high 8bits

Default: 00H

Reset: power on reset

Bit	Description	R/W	Default
7-0	Ts pin ADC data high 8bits	RW	0

6.14.2.40 REG 59H: Ts pin ADC data, low 4 bits

Default: 00H

Reset: power on reset

Bit	Description	R/W	Default
7-0	Ts pin ADC data low 4 bits (Unit: 0.8mV)	RW	0

6.14.2.41 REG 78H: Average data bit[11:4] for Battery voltage

Default: 00H

Reset: power on reset

Bit	Description	R/W	Default
7-0	Average data bit[11:4] for Battery voltage	RW	0

6.14.2.42 REG 79H: Average data bit[3:0] for Battery voltage

Default: 00H

Reset: power on reset

Bit	Description	R/W	Default
7-0	Average data bit[3:0] for Battery voltage (Unit: 1.2mV)	RW	0

6.14.2.43 REG 7AH: Average data bit[11:4] for Battery charge current

Default: 00H

Reset: power on reset

Bit	Description	R/W	Default
7-0	Average data bit[11:4] for Battery charge current	RW	0

6.14.2.44 REG 7BH: Average data bit[3:0] for Battery charge current

Default: 00H

Copyright©Shenzhen X-Powers Technology Co., Ltd. All Rights Reserved.

Reset: power on reset

Bit	Description	R/W	Default
7-0	Average data bit[3:0] for Battery charge current (Unit:2mA)	RW	0

6.14.2.45 REG 7CH: Average data bit[11:4] for Battery discharge current

Default: 00H

Reset: power on reset

Bit	Description	R/W	Default
7-0	Average data bit[11:4] for Battery discharge current	RW	0

6.14.2.46 REG 7DH: Average data bit[3:0] for Battery discharge current

Default: 00H

Reset: power on reset

Bit	Description	R/W	Default
7-0	Average data bit[3:0] for Battery discharge current (Unit:2mA)	RW	0

6.14.2.47 REG 80H: ADC Enable

Default: F2H

Reset: power on reset

Bit	Description	R/W	Default
7	Die temperature measure ADC channel enable 0: disable 1: enable	RW	1
6	BATFET current measure ADC channel enable 0: disable 1: enable	RW	1
5	TS pin voltage measure ADC channel enable 0: disable 1: enable	RW	1
4	battery voltage measure ADC channel enable 0: disable 1: enable	RW	1
3-2	Reserved	R	0
1	BATFET discharge current measure ADC channel enable 0: disable 1: enable	RW	1
0	Reserved	R	0

6.14.2.48 REG 81H: TS pin CTRL & ADC speed setting

Default: 0CH

Reset: power on reset

Bit	Description	R/W	Default
7	TS PIN function select: 0 : TS pin is the battery temperature sensor input and will affect the charger	RW	0

Copyright©Shenzhen X-Powers Technology Co., Ltd. All Rights Reserved.

	1 : TS pin is the external input for ADC and doesn't affect the charger		
6-5	ADC conversion clock selection 00: 100Hz 01: 200Hz 10: 400Hz 11: 800Hz	RW	00
4-3	TS current source on/off enable bit 00: off 01: always on when TS input ADC is enabled, not affected by ADC phase or charger 10: on in the ADC phase and off when ADC is off 11: always on	RW	01
2-1	current source to TS pin setting 00: 20uA 01: 40uA 10: 60uA 11: 80uA	RW	10
0	Reserved	R	0

6.14.2.49 REG 82H: TS_HYSL2H setting

Default: 18H

Reset: power on reset

Bit	Description		R/W	Default
7-0	TS_HYSL2H setting, M	hysteresis set for TS from low temperature go to normal, M*10H*0.8mV,default 307.2mV, ADC data 18h	RW	18H

6.14.2.50 REG 83H: TS_HYSH2L setting

Default: 04H

Reset: power on reset

Bit	Description		R/W	Default
7-0	TS_HYSH2L setting, M	hysteresis set for TS from high temperature go to normal, M*10H*0.8mV,default 51.2mV, ADC data 04h	RW	04H

6.14.2.51 REG 84H: VLTF_CHG setting

Default: 74H

Reset: power on reset

Bit	Description		R/W	Default
7-0	VLTF_CHG setting, M	VLTF setting, M*10H*0.8mV, M=74h when VTS=1.485V(about 0deg)	RW	74H

6.14.2.52 REG 85H: VHTF_CHG setting

Default: 17H

Reset: power on reset

Bit	Description	R/W	Default

Copyright©Shenzhen X-Powers Technology Co., Ltd. All Rights Reserved.

7-0	VHTF_CHG setting, M	VHTF setting, M*10H*0.8mV, M=17h when VTS=0.294V(about 45deg)	RW	17H

6.14.2.53 REG 86H: VLTF_WORK setting

Default: BDH

Reset: power on reset

Bit	Description		R/W	Default
7-0	VLTF_WORK setting, M	VLTF setting, M*10H*0.8mV, M=BDh when VTS=2.419V(about -10deg)	RW	BDH

6.14.2.54 REG 87H: VHTF_WORK setting

Default: 11H

Reset: power on reset

Bit	Description		R/W	Default
7-0	VHTF_WORK setting, M	VHTF setting, M*10H*0.8mV, M=11h when VTS=0.218V(about 55deg)	RW	11H

6.14.2.55 REG 8AH: Charger control1

Default: 82H

Reset: bit[7] is system reset, others are power on reset

Bit	Description	R/W	Default
7	Charger enable configuration 0: charge disable 1: charge enable	RW	1
6-5	charge mode frequency selection 00: 1.5MHz 01: 1.0MHz 10: 2.5MHz 11: 2.0MHz	RW	00
4-1	Pre_charge current limit offset:64mA range: 64mA--1024mA default:128mA step: 64mA	RW	0001
0	Reserved	R	0

6.14.2.56 REG 8BH: Charger control2

Default: 10H

Reset: power on reset

Bit	Description	R/W	Default
7	Reserved	R	0
6	After charge done, then enter 10mA current charge process. 0:disable 1:enable	RW	0

Copyright©Shenzhen X-Powers Technology Co., Ltd. All Rights Reserved.

5-0	Fast charge current limit offset: 0mA range: 0mA(000000)--3072mA(101111) default: 1024mA(010000) step: 64mA note: ICHG=000000(0mA) disables charge ICHG>101111(3072mA)is clamped to register value 101111(3072mA)	RW	010000

6.14.2.57 REG 8CH: Charger control3

Default: 6AH

Reset: power on reset

Bit	Description	R/W	Default
7-2	Charge voltage limit offset:3.840V range:3.840V--4.608V(110000) default:4.256V(011010) step: 16mV note: VREG>110000(4.608V)is clamped to register value 110000(4.608V)	RW	011010
1	battery pre_charge to fast charge threshold 0: 2.8V 1: 3.0V(default)	RW	1
0	battery recharge threshold offset(below charge voltage limit) 0: 100mV(VRECHG)below VREG(REG8C[7:2]) 1: 200mV(VRECHG)below VREG(REG8C[7:2])	RW	0

6.14.2.58 REG 8DH: Charger control4

Default: 8DH

Reset: bit[6-3] are power on reset, others are system reset

Bit	Description	R/W	Default
7	Charging termination enable 0: disable 1: enable	RW	1
6-3	Termination current limit offset:64mA range: 64mA--1024mA default:128mA(0001) step: 64mA	RW	0001
2-1	Timer 2 setting 00: 5hrs 01: 8hrs 10: 12hrs 11: 20hrs	RW	10
0	Safety timer2 enable 0: disable 1: enable	RW	1

Copyright©Shenzhen X-Powers Technology Co., Ltd. All Rights Reserved.

6.14.2.59 REG 8EH: Charger control5

Default: B0H

Reset: bit[1-0] are power on reset, others are system reset

Bit	Description	R/W	Default
7	pre_charger safe timer enable 0: timer disabled 1: timer enabled	RW	1
6-5	pre_charger timer setting 00: 40min 01: 50min 10: 60min 11: 70min	RW	01
4	safety timer1/2 setting during DPM or thermal regulation 0: safety timer not showed during input DPM or thermal regulation 1: safety timer showed during input DPM or thermal regulation	RW	1
3	battery detection enable 0: disable battery detection function 1: enable battery detection function	RW	0
2	Battery Load(Ibatload)enable 0: Disabled 1: Enabled	RW	0
1	Battery detection charge/discharge current time: 0: 1s 1:128ms	RW	0
0	Reserved	R	0

6.14.2.60 REG 90H: CHGLED pin function setting

Default: 00H

Reset: bit[2-0] are power on reset, others are system reset

Bit	Description	R/W	Default
7	CHGLED pin disable 0: enable CHGLED pin function 1: disable CHGLED pin function	RW	0
6	Breath and PWM function enable control when reg90[2:0] is set to 011 or 101 0 : disable 1 : enable	RW	0
5-3	CHGLED pin output when reg90[2:0] is set to 110-111; 000 : Hiz; 001 : high level 25% duty 1Hz; 010 : high level 25% duty 4Hz; 011 : drive low; 100 : drive high; 101-111 : Hiz.	RW	000
2-0	CHGLED pin display function setting 000 : display with type A function, OD; 001 : display with type B function, OD;	RW	000

Copyright©Shenzhen X-Powers Technology Co., Ltd. All Rights Reserved.

	010 : display with breath function controlled by charger, OD; 011 : display with breath function not controlled by charger, OD; 100 : display with three state(low/high/Hiz) controlled by charger, Push Pull; 101 : display with PWM function, PushPull; 110-111 : output controlled by reg90[5:3], PushPull.		

6.14.2.61 REG 91H: Breath function control1

Default: 64H

Reset: power on reset

Bit	Description	R/W	Default
7-0	CL (the time unit count set for breath function stay in DMIN, the time unit is TUL.) So, TL = CL*TUL, TL should larger than PWM period, and default is 1.6s.	RW	64H

6.14.2.62 REG 92H: Breath function control2

Default: 01H

Reset: power on reset

Bit	Description	R/W	Default
7-0	CSR (the time unit count set for breath function stay in every step from DMIN rise to DMAX, the time unit is TUS.) So, TSR = TUS*CSR , TSR should larger than PWM period, and default is 16ms. And the total rise time, TR = TSR * NC, default is 1.6s.	RW	01H

6.14.2.63 REG 93H: Breath function control3

Default: 06H

Reset: power on reset

Bit	Description	R/W	Default
7-0	CH (the time unit count set for breath function stay in DMAX,the time unit is TUH.) So, TH = CH*TUH, TL should larger than PWM period, and default is 96ms.	RW	06H

6.14.2.64 REG 94H: Breath function control4

Default: 01H

Reset: power on reset

Bit	Description	R/W	Default
7-0	CSF (the time unit count set for breath function stay in every step from DMAX fall to DMIN, the time unit is TUS.) So, TSF =TUS*CSF, TSF should larger than PWM period, and default is 16ms. And the total rise time, TF = TSF * NC, default is 1.6s.	RW	01H

6.14.2.65 REG 95H: Breath function control5

Default: 64H

Reset: power on reset

Copyright©Shenzhen X-Powers Technology Co., Ltd. All Rights Reserved.

Bit	Description	R/W	Default
7-0	Breath function total duty step count setting between DMIN and DMAX, NS. So, the breath Maximal duty(DMAX) is (NMIN+NS)/M, default is 100%. Note: (NMIN+NS) <= M	RW	64H

6.14.2.66 REG 96H: Breath function control6

Default: 00H

Reset: power on reset

Bit	Description	R/W	Default
7-0	For breath function Minimal duty setting, NMIN (the high level clock number in every PWM period, the clock frequency is f0). So, the breath Minimal duty(DMIN) is NMIN/M, default is 0%.	RW	00H

6.14.2.67 REG 97H: Breath function control7

Default: 64H

Reset: power on reset

Bit	Description	R/W	Default
7-0	M(the total clock number in every PWM output period, the clock frequency is f0). So fPWM(the PWM output frequency) is f0/M, default is 5kHz.	RW	64H

6.14.2.68 REG 98H: Breath function control7 & Input clock frequency for PWM output

Default: 16H

Reset: power on reset

Bit	Description	R/W	Default
7	The CHGLED pin breath step time and the stay high time unit setting selection 0 : the time unit setting by REG98[3:0]; 1 : the time unit setting by REG9A.	RW	0
6-4	f0 (The input clock frequency) setting for PWM output 000 : 1MHz 001 :500kHz 010 : 250kHz 011 : 125kHz 100 : 62.5kHz 101 : 31.2kHz 110 :15.6kHz 111 : 7.8kHz		001
3-0	The CHGLED pin breath time unit for stay at DMIN/DMAX, or every change step between DMIN and DMAX. TUL = TUH = TUS = 2^(n-2) ms, default is 16ms; n <= 8;		0110

6.14.2.69 REG 99H: PWM function duty setting

Default: 32H

Reset: power on reset

Bit	Description	R/W	Default
7-0	For PWM function duty setting, NPWM (the high level clock number in every PWM period, the clock frequency is f0). So, the PWM function duty DPWM = NPWM/M, default is 50%. Note: NPWM <= M	RW	32H

Copyright©Shenzhen X-Powers Technology Co., Ltd. All Rights Reserved.

6.14.2.70 REG 9AH: CHGLED breath time unit option

Default: 65H

Reset: power on reset

Bit	Description	R/W	Default
7-4	The CHGLED breath time unit option for stay at DMAX; TUH = 2^(n-2) ms; n <= 8;	RW	0110
3-0	The CHGLED breath time unit option for every rise or fall step time; TUS = 2^(n-2) ms; n <= 8;	RW	0101

6.14.2.71 REG B8H: Fuel Gauge Control

Default: C0H

Reset: power on reset

Bit	Description	R/W	Default
7	Fuel gauge enable control(including OCV and coulombmeter) 0 : disable 1 : enable	RW	1
6	Coulombmeter enable control 0 : disable 1 : enable	RW	1
5	Battery maximum capacity calibration enable control 0 : disable 1 : enable	RW	0
4	Battery maximum capacity calibration status 0: not calibrating 1: is calibrating	R	0
3-2	Reserved	R	0
1	Old coulombmeter enable control 0 : disable 1 : enable	RW	0
0	Old coulombmeter clear control 0 : Write 0 to this bit will do nothing 1 : Write 1 to this bit will clear old coulombmeter and then this bit will be cleared automatically	RW	0

6.14.2.72 REG B9H: Battery capacity percentage for indication

Default: 64H

Reset: power on reset

Bit	Description	R/W	Default
7	Indicating if battery capacity percentage for indication is valid: 0 : is not valid 1 : is valid	R	0
6-0	Battery capacity percentage for indication	R	64H

6.14.2.73 REG BAH: RDC 1

Default: 80H

Reset: power on reset

Bit	Description	R/W	Default
7	RDC calculation control 0 : disable 1 : enable	RW	1

Copyright©Shenzhen X-Powers Technology Co., Ltd. All Rights Reserved.

6	RDC was right detected or not flag: 1: Yes 0: Not	RW	0
5	Reserved	R	0
4-0	RDC value high 5 bits (Unit:1.17mΩ)	RW	00000

6.14.2.74 REG BBH: RDC 0

Default: 55H

Reset: power on reset

Bit	Description	R/W	Default
7-0	RDC value low 8 bits (Unit:1.17mΩ)	RW	55H

6.14.2.75 REG BCH: OCV 1

Default: 00H

Reset: power on reset

Bit	Description	R/W	Default
7-0	OCV value high 8 bits	R	00H

6.14.2.76 REG BDH: OCV 0

Default: 00H

Reset: power on reset

Bit	Description	R/W	Default
7-4	Reserved	R	0
3-0	OCV value low 4 bits	R	0000

6.14.2.77 REG C0H~DFH: OCV percentage table

6.14.2.78 REG E0H: Battery maximum capacity

Default: 00H

Reset: power on reset

Bit	Description	R/W	Default
7	Indicating if battery maximum capacity is valid 0 : Not valid 1 : Is valid	RW	0
6-0	Battery maximum capacity bit[14:8]	RW	00H

6.14.2.79 REG E1H: Battery maximum capacity

Default: 00H

Reset: power on reset

Bit	Description	R/W	Default
7-0	battery maximum capacity bit[7:0](Unit: 1.456mAh)	RW	00H

6.14.2.80 REG E2H: Coulomb meter counter

Default: 00H

Copyright©Shenzhen X-Powers Technology Co., Ltd. All Rights Reserved.

Reset: power on reset

Bit	Description	R/W	Default
7	Indicating if coulombmeter counter is valid 0 : Not valid 1 : Is valid	RW	0
6-0	Coulombmeter counter[14:8]	RW	00H

6.14.2.81 REG E3H: Coulomb meter counter

Default: 00H

Reset: power on reset

Bit	Description	R/W	Default
7-0	Coulombmeter counter[7:0] (Unit: 1.456mAh)	RW	00H

6.14.2.82 REG E4H: OCV Percentage of battery capacity

Default: 64H

Reset: power on reset

Bit	Description	R/W	Default
7	Indicating if OCV percentage of battery capacity is valid 0 : Not valid 1 : Is valid	R	0
6-0	OCV percentage of battery capacity	R	64H

6.14.2.83 REG E5H: Coulombmeter percentage of battery capacity

Default: 64H

Reset: power on reset

Bit	Description	R/W	Default
7	Indicating if coulombmeter percentage of battery capacity is valid: 0 : Not valid 1 : Is valid	R	0
6-0	Coulombmeter percentage of battery capacity	R	64H

6.14.2.84 REG E6H: Battery capacity percentage warning level

Default: A0H

Reset: power on reset

Bit	Description	R/W	Default
7-4	Warning level 1: Warning threshold, 5-20%, 1% per step	RW	1010
3-0	Warning level 2: Shutting down threshold, 0-15%, 1% per step	RW	0000

6.14.2.85 REG E7H: OCV_SOC curve setting

Default: 0FH

Reset: power on reset

Bit	Description	R/W	Default
7-5	Reserved	R	0
4	The battery voltage limit control bit in the battery internal resistor calculation stop charge status.	RW	0

Copyright©Shenzhen X-Powers Technology Co., Ltd. All Rights Reserved.

	0 : no limit 1 : limit as the charge status(setting in regEC[4:3])		
3-0	The OCV VS Battery SOC curve setting 0000 : Selection the charge voltage target 4.10V curve. 0001 : Selection the charge voltage target 4.15V curve. 0010 : Selection the charge voltage target 4.20V curve. 0011 : Selection the charge voltage target 4.25V curve. 0100 : Selection the charge voltage target 4.35V curve. 0101 : Selection the charge voltage target 4.40V curve. 0110 : Selection the charge voltage target 4.45V curve. 0111 : Selection the charge voltage target 4.50V curve. 1000 : Selection the charge voltage target 4.60V curve. 1001 ~1111 : Depend on the charge voltage target setting Vtarget <= 4.112V Selection the charge voltage target 4.10V curve. 4.112V <Vtarget <= 4.160V,Selection the charge voltage target 4.15V curve. 4.160V <Vtarget <= 4.208V,Selection the charge voltage target 4.20V curve. 4.208V <Vtarget <= 4.256V,Selection the charge voltage target 4.25V curve. 4.256V <Vtarget <= 4.352V,Selection the charge voltage target 4.35V curve. 4.352V <Vtarget <= 4.416V,Selection the charge voltage target 4.40V curve. 4.416V <Vtarget <= 4.464V,Selection the charge voltage target 4.45V curve. 4.464V <Vtarget <= 4.512V,Selection the charge voltage target 4.50V curve. 4.512V <Vtarget Selection the charge voltage target 4.60V curve.	RW	1111

6.14.2.86 REG E8H: Fuel gauge tuning control 0

Default: 00H

Reset: power on reset

Bit	Description	R/W	Default
7	When the available signal of external power supply is changed or not, reset ADC filter or not 0: Yes, reset the ADC filter 1: No	RW	0
6	When the charging circuit on or off, reset ADC filter or not 0: Yes, reset the ADC filter 1: No	RW	0
5	When the battery voltage ADC channels open or closed, reset ADC filter or not 0: Yes, reset the ADC filter 1: No	RW	0
4	When the battery rechargeable battery ADC channels open or closed, reset ADC filter or not 0: Yes, reset the ADC filter 1: No	RW	0

Copyright©Shenzhen X-Powers Technology Co., Ltd. All Rights Reserved.

3	When the battery discharge current ADC channels open or closed, reset ADC filter or not 0: Yes, reset the ADC filter 1: No	RW	0
2-0	Battery capacity percentage for indication update minimum interval 000: 30s 001: 60s 010: 120s 011: 164s 100: immediately update when changed 101: 5s 110: 10s 111: 20s	RW	000

6.14.2.87 REG E9H: Fuel gauge tuning control 1

Default: 00H

Reset: power on reset

Bit	Description	R/W	Default
7-6	OCV Percentage calibrate the Coulomb meter percentage, maximum time interval 00: 60s 01: 120s 10: 15s 11: 30s	RW	00
5-3	Wait for the stability for charge when in RDC calculation 000: 180s 001: 240s 010: 300s 011: 600s 100: 30s 101: 60s 110: 90s 111: 120s	RW	000
2-0	Wait for the stability for discharge when in RDC calculation 000: 180s 001: 240s 010: 300s 011: 600s 100: 30s 101: 60s 110: 90s 111: 120s	RW	000

6.14.2.88 REG EAH: Fuel gauge tuning control 2

Default: 00H

Reset: power on reset

Copyright©Shenzhen X-Powers Technology Co., Ltd. All Rights Reserved.

Bit	Description	R/W	Default
7-6	OCV Percentage Debounce setting(only when the change continuous the same direction as more than N times, then the ocv percentage increase or decrease)N: 00: 4 01: 8 10: 1 11: 2	RW	00
5-4	Coulomb meter Percentage Debounce setting(only when the change continuous the same direction as more than N times, then the ocv percentage increase or decrease)N: 00: 4 01: 8 10: 1 11: 2	RW	00
3	Battery maximum capacity and OCV-SoC curve calibration start condition: 0: OCV percentage < (REG E6H[3:0] + 3) 1: OCV percentage < (REG E6H[3:0] + 6)	RW	0
2	Battery maximum capacity calibration end condition 0 0: OCV percentage ⩾ 95% 1: OCV percentage = 100%	RW	0
1	Battery maximum capacity calibration end condition 1 0: wait for charge finished 1: do not wait for charge finished	RW	0
0	Battery maximum capacity calibration end condition 2 (wait N ms for the charge finished indication signal after REG 01H[6] clear to 0,N: 0: 68 1: 120	RW	0

6.14.2.89 REG EBH: Fuel gauge tuning control 3

Default: 00H

Reset: power on reset

Bit	Description	R/W	Default
7	When charge status bit REG 01H[6] = 1,the percentage of indication can be decrease or not 0: decrease enable 1: decrease disable	RW	0
6-4	When REG 01H[6] = 1，percentage of indication decrease hysteresis(N) setting 000: 4% 001: 5% 010: 6% 011: 7% 100: 0%	RW	000

Copyright©Shenzhen X-Powers Technology Co., Ltd. All Rights Reserved.

	101: 1% 110: 2% 111: 3%		
3	Calculation RDC current condition setting 0: ≥300mA 1: ≥150mA	RW	0
2-0	Calibrate RDC percentage changed threshold setting 000: 4% 001: 5% 010: 6% 011: 7% 100: 0% 101: 1% 110: 2% 111: 3% calibration：△OCVPCT > N	RW	000

6.14.2.90 REG ECH: Fuel gauge tuning control 4

Default: 00H

Reset: power on reset

Bit	Description	R/W	Default
7-5	Reserved	R	0
4-3	The minimum battery voltage for RDC calculation 00: 3.5V 01: 3.6V 10: 3.7V 11: 3.4V	RW	00
2-0	Coulomb counter calibration threshold，relative with REG_E6_[3:0] 000: REG_E6H[3:0]+7(default) 001: REG_E6H[3:0]+8 010: REG_E6H[3:0]+9 011: REG_E6H[3:0]+10 100: REG_E6H[3:0]+3 101: REG_E6H[3:0]+4 110: REG_E6H[3:0]+5 111: REG_E6H[3:0]+6	RW	000

6.14.2.91 REG EDH: Fuel gauge tuning control 5

Default: 00H

Reset: power on reset

Bit	Description	R/W	Default
7	OCV percentage relative with the charge/discharge rate control 0: Disable 1: Enable	RW	0

Copyright©Shenzhen X-Powers Technology Co., Ltd. All Rights Reserved.

6	Update time when rate > 0.5C 0: 30S 1: 15S	RW	0
5-4	Update time when rate < 0.5C and rate > 0.1C 00: 60S 01: 75S 10: 30S 11: 45S	RW	00
3-2	Update time when rate < 0.1C 00: 120S 01: 180S 10: 240S 11: 60S	RW	00
1-0	Fixed update time 00: 30S 01: 45S 10: 60S 11: 15S	RW	00

6.14.2.92 REG EEH: Fuel gauge tuning control 6

Default: 01H

Reset: power on reset

Bit	Description	R/W	Default
7	OCV capacity curve and battery capacity calibration control in charge or discharge status 0: Charging calibration 1: Discharging calibration	RW	0
6-5	Reserved	R	0
4	The debounce number of battery OCV reached 0 0: 3 1:4	RW	0
3	Whether hold charge accumulation or regressive when Coulometer value in 100% or OCV in 0%, or OCV curve in calibration period 0: Normal accumulation or regressive 1: Hold, do not accumulation or regressive	RW	0
2	OCVPCT update control 0: Old ocvpct update which not depend on charge ratio 1: New ocvpct update which depend on charge ratio	RW	0
1-0	The OCV debounce time setting at every OCV level during the BMU doing OCV percent curve calibration 00: 2s 01: 4s 10: 6s 11: 8s	RW	01

Copyright©Shenzhen X-Powers Technology Co., Ltd. All Rights Reserved.

6.14.2.93 REG EFH: Fuel gauge tuning control 7

Default: 00H

Reset: power on reset

Bit	Description	R/W	Default
7	Reserved	R	0
6	In the charging state, the smooth ocv-percentage less than coulomb calibration threshold and the instantaneous ocv-percentage equal 0%, then it will clear the coulomb counter or not. 0 : clear the coulomb 1 : not clear the coulomb	RW	0
5	The battery total calibration has completely and the ocv percent calibration doesn't complete , the ocv percent calibration processing will stop or not. 0 : stop 1 : don't stop	RW	0
4	The indication of battery charge percentage can go to 100% or not before charge done 0 : disable 1 : enable	RW	0
3	Reserved	R	0
2	The battery charge percent for ocv percent curve calibration selection. 0 : the instantaneous charge percent 1 : the smooth charge percent	RW	0
1	The battery charge percent for battery capacity calibration selection. 0 : the instantaneous charge percent 1 : the smooth charge percent	RW	0
0	The battery charge percent for the battery discharge ocv percent curve and capacity calibration start. 0 : must equal 100% 1 : no limit	RW	0

Copyright©Shenzhen X-Powers Technology Co., Ltd. All Rights Reserved.

7 Application Information

7.1 Charger

1. A 10mohm resistor is used to sample current. Accuracy of the resistor is 1% at least.

2. 1uF capacitor parallel with the sampling resistor can not be omitted, and must be close to the resistor in layout.

3. CSP and CSN should be differential lines to avoid interference.

4. TS pin is used to detect battery temperature. It is recommended to use 10k NTC resistor. If TS pin is not used, the function can be disabled by software.

5. CHGLED pin is used to indicate charging status. If CHGLED is set to be push-pull output, just connect indicator light between this pin and GND. If CHGLED is set to be open drain output, connect indicator light between this pin and VBUS by a pull-up resistor. If CHGLED pin is not used, it just stays floating.

6. Use 1uH inductor. Its saturation current should be 50% higher than the setting value and its internal resistance should be less than 30mohm.

7. Place battery to BAT pin as close as possible to reduce wire length. Use thick line to reduce line impedance and voltage drop.

7.2 BUCK/LDO

1. Connect two 22uF capacitors to VSYS pin.

2. Output capacitance of LDO is not smaller than 4.7uF.

3. Input capacitance of VBUS is not smaller than 10uF.

4. Layout: Inductor is close to pin, output capacitors are close to inductors and input capacitors are close to input pin of BMU.

7.3 BOOST

1. If only battery is present and V_{BAT} is higher than depletion threshold(V_{BAT_DPLZ}), BATFET, connecting battery to system, is off by default and need to be turned on by pressing the PWRON key.

2. If only battery is present and BATFET is on, the output voltage of VMID has two possibilities:(1) BOOST enable. In BOOST mode, the output voltage of VMID is 5V by default. (2)BOOST disable. Because of the HS-MOS body diode, the output voltage of VMID is equal to the result of the subtraction of VSYS and Vdiode. The BOOST mode can be enabled or disabled by Host.

3. Connect a 22uF capacitor to VMID pin.

4. When BMU is powered by battery, if the insertion of OTG device is detected, BOOST mode will be enabled

Copyright©Shenzhen X-Powers Technology Co., Ltd. All Rights Reserved.

automatically and RBFET is turned on to supply power to VBUS. The whole process can be controlled by Host.

5. if the removal of OTG device is detected, RBFET will be turned off automatically, and whether to disable boost mode depends on application scenarios. The whole process can be controlled by Host.

7.4 IO

1. TWSI: Pull up SDA/SCK to a source, such as LDO.
2. Pull up IRQ with a 4.7kΩ resistor to a source, such as LDO.
3. When operating with PMIC, the PWROK pin of AXP515 is connected to the PWROK signal of PMIC to detect the PMIC’s power on/off status.
4. Use RC(510Ω+100nF) to connect the PWRON key between PWRON pin and GND.
5. If connected to Host, DP/DM should be differential lines and a impedance matching is needed.

Copyright©Shenzhen X-Powers Technology Co., Ltd. All Rights Reserved.

7.5 Typical Application

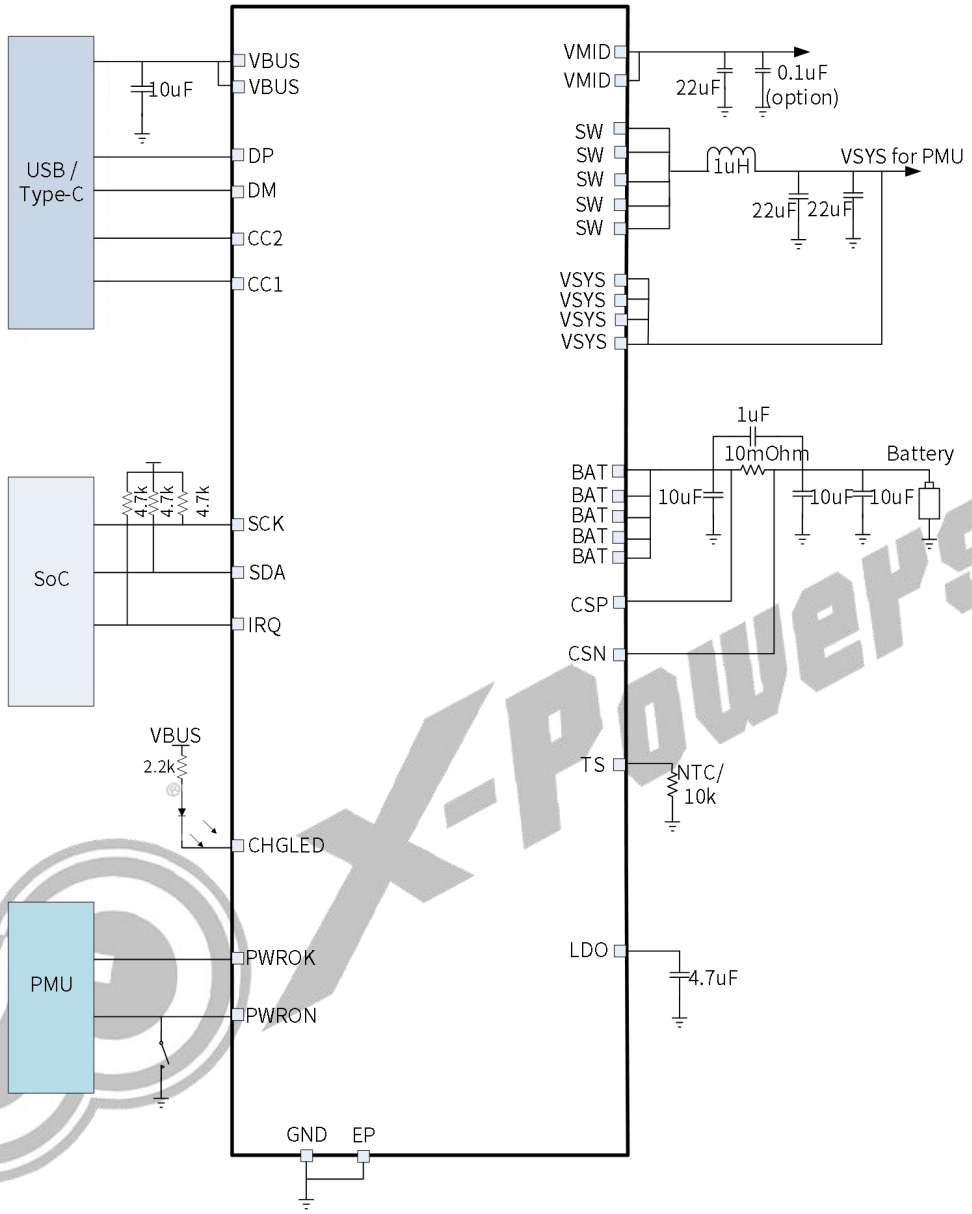

Copyright©Shenzhen X-Powers Technology Co., Ltd. All Rights Reserved.

8 PCB Layout Guideline

8.1 Charging and Discharging Part

1、BAT charging path: VBUS->VMID->SW->inductor->VSYS->sampling resistor->battery, line width>=200mil; BAT discharging path: battery->sampling resistor->VSYS->inductor->SW->VMID, line width>=200mil. Lead wire of sampling resistor must be pulled out outwards in parallel from PCB pads. Place battery to BMU as close as possible, as shown in the following figure.

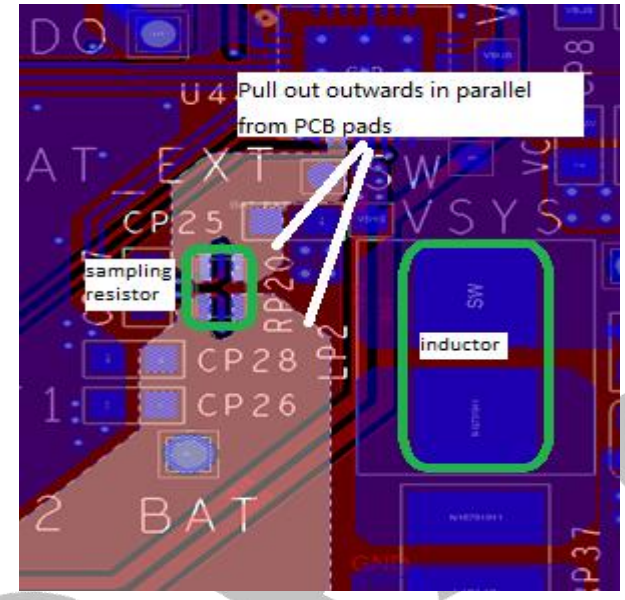

2、Wire between CSN/CSP and sampling resistor uses 8-10mil. Lead wire of sampling resistor must be pulled out inwards in parallel from PCB pads, as shown in the following figure.

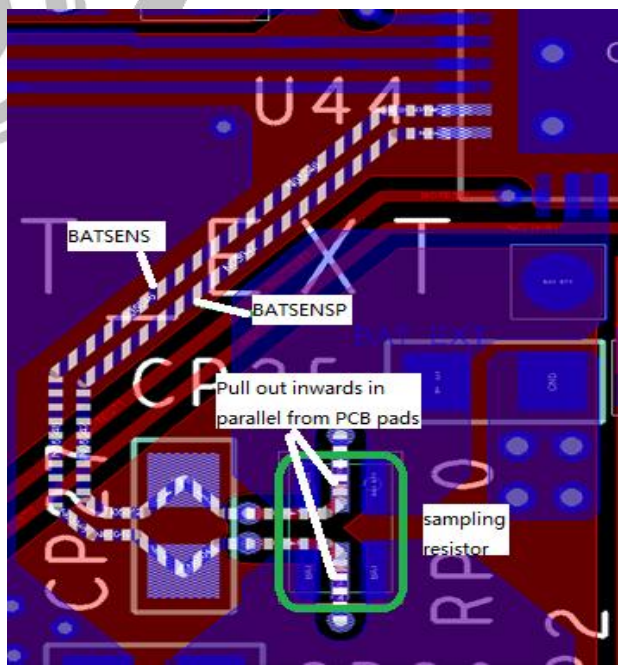

8.2 High Current Path

Line width of high current path such as power input and output need to be widened to reduce line impedance, voltage drop and loss.

Copyright©Shenzhen X-Powers Technology Co., Ltd. All Rights Reserved.

1. Line width of VBUS, VSYS,VMID: >=200mil;

2. Line width of LDO output depends on load current.

3. Place battery to BAT connection points as close as possible to reduce wire length. Use thick line to reduce line impedance and voltage drop.

Copyright©Shenzhen X-Powers Technology Co., Ltd. All Rights Reserved.

9 Package, Carrier, Storage and Baking Information

9.1 Package

AXP515 package is QFN5*5, 40-pin. Figure 9-1 shows AXP515 package.

Figure 9-1 Package Information

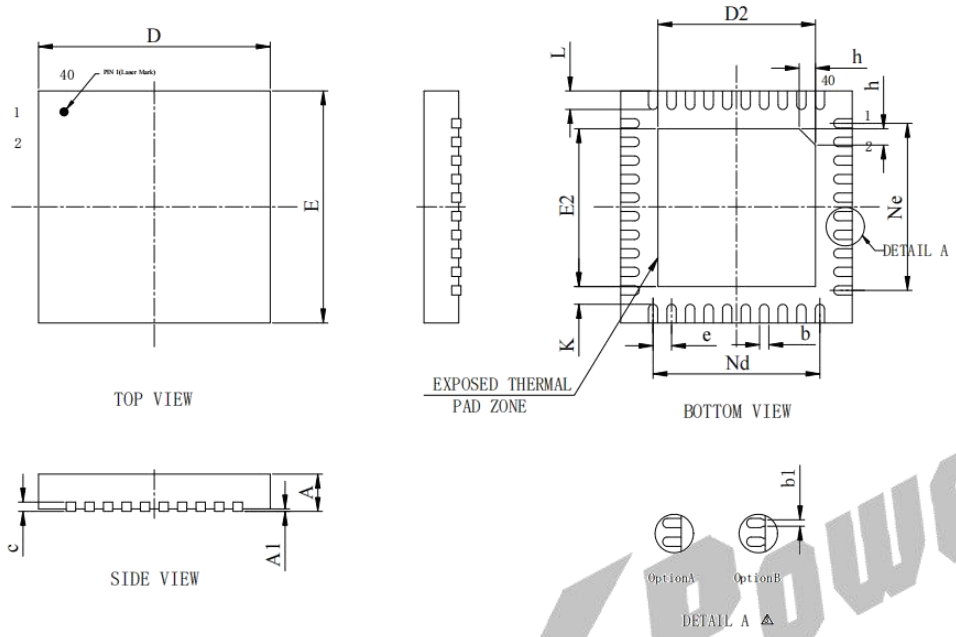

SYMBOL	MILLIMETER		
	MIN	NOM	MAX
A	0.70	0.75	0.80
A1	—	0.02	0.05
b	0.15	0.20	0.25
b1	0.14REF		
c	0.18	0.20	0.25
D	4.90	5.00	5.10
D2	3.30	3.40	3.50
e	0.40BSC		
Nd	3.60BSC		
E	4.90	5.00	5.10
E2	3.30	3.40	3.50
Ne	3.60BSC		
L	0.35	0.40	0.45
K	0.20	—	—
h	0.30	0.35	0.40
L/F载体尺寸 (mil)	150*150		

Figure 9-2 AXP515 marking.

Table 9-1 AXP515 Marking Definitions

No.	Marking	Description	Fixed/Dynamic
1	AXP515	Product name	Fixed
2	LLLLLLL	Lot number	Dynamic
3	XXXX	Date code	Dynamic
4		X-POWERS logo	Fixed
5	White dot	Package pin 1	Fixed

9.2 Carrier

Table 9-2 Tray Carrier Information

Item	Color	Size
Aluminum foil bags	Silvery white	540mm x 300mm x 0.14mm

Copyright©Shenzhen X-Powers Technology Co., Ltd. All Rights Reserved.

Pearl cotton cushion(Vacuum bag)	White	12mm x 680mm x 185mm
Pearl cotton cushion (The Gap between vacuum bag and inside box)	White	Left-Right:12mm x 180mm x 85mm Front-Back:12mm x 350mm x 70mm
Inside Box	White	396mm x 196mm x 96mm
Outside Box	White	420mm x 410mm x 320mm

Figure 9-3 Tray Dimension Drawing.

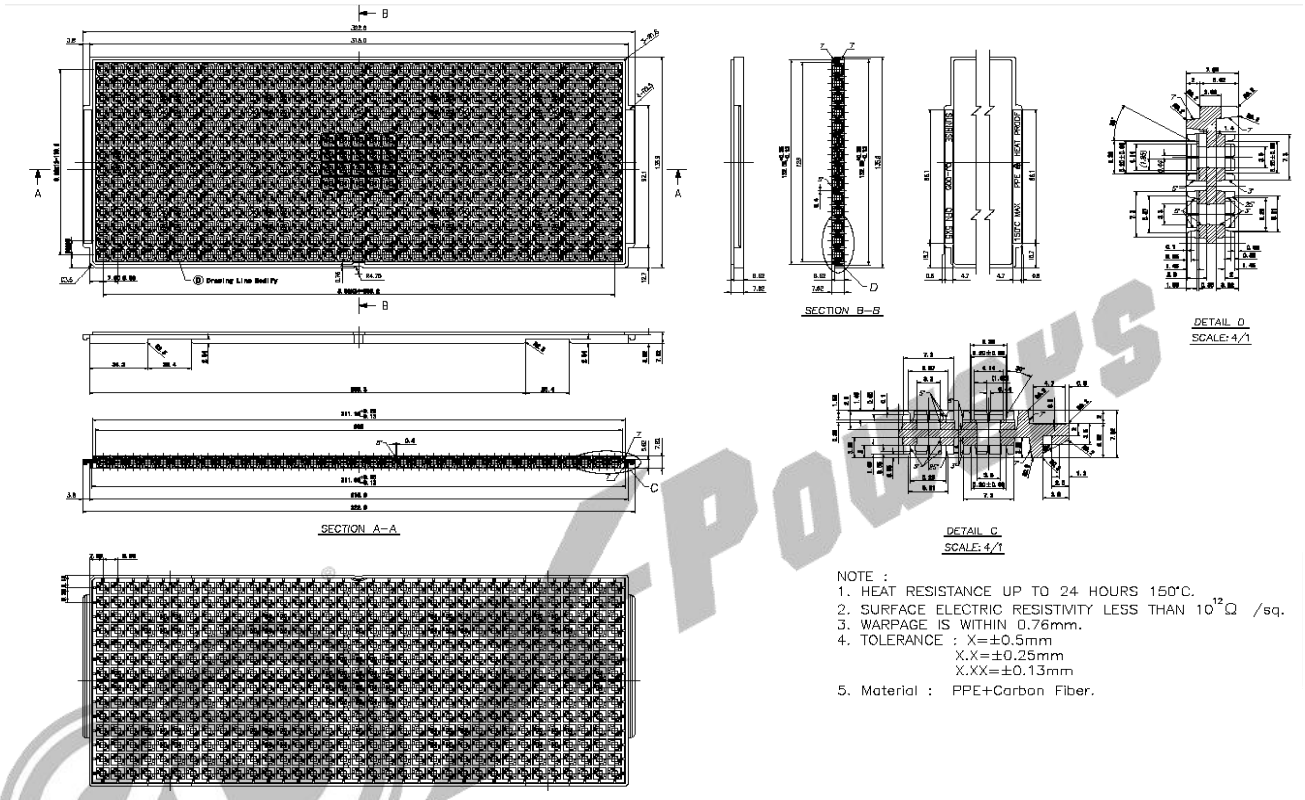

Figure 9-4 Packing Quantity Information

Type	Quantity	Part Number
Tray	490pcs/Tray 10Trays/package	AXP515

9.3 Storage

9.3.1 Moisture Sensitivity Level(MSL)

A package’ s MSL indicates its ability to withstand exposure after it is removed from its shipment bag, a low MSL device sample can be exposed on the factor floor longer than a high MSL device sample. ALL MSL are defined in Table 9-3.

Table 9-3 MSL Summary

MSL	Out-of-bag floor life	Comments
1	Unlimited	≤30°C/85%RH
2	1 year	≤30°C/60%RH
2a	4 weeks	≤30°C/60%RH

Copyright©Shenzhen X-Powers Technology Co., Ltd. All Rights Reserved.

3	168 hours	≤30°C/60%RH
4	72 hours	≤30°C/60%RH
5	48 hours	≤30°C/60%RH
5a	24 hours	≤30°C/60%RH
6	Time on Label(TOL)	≤30°C/60%RH

AXP515 device samples are classified as MSL3.

9.3.2 Bagged Storage Conditions

The shelf life of AXP515 are defined in the following table.

Table 9-4 Bagged Storage Conditions

Packing mode	Vacuum packing
Storage temperature	20°C~26°C
Storage humidity	40%~60%RH
Shelf life	12 months

9.3.3 Out-of-bag Duration

It is defined by the device MSL rating. The out-of-bag duration of AXP515 is as follows.

Table 9-5 Out-of-bag Duration

Storage temperature	20°C~26°C
Storage humidity	40%~60%RH
Moisture Sensitivity Level(MSL)	3
Floor life	168 hours

For no mention of storage rules in this document, please refer to the latest *IPC/JEDEC J-STD-020C*.

9.4 Baking

It is not necessary to bake AXP515 if the conditions specified in Section 9.3.2 and Section 9.3.3 have not been exceeded. It is necessary to bake AXP515 if any condition specified in Section 9.3.2 and Section 9.3.3 have been exceeded.

Table 9-6 Baking Conditions

Surrounding	Condition	Note
Nitrogen	Tray:125°C/8 hours	Bake no more than once.

Copyright©Shenzhen X-Powers Technology Co., Ltd. All Rights Reserved.

10 Reflow Profile

The reflow profile recommended in this document is a lead-free reflow profile that is suitable for pure lead-free technology of lead-free solder paste.

Figure 10-1 Typical Reflow Profile

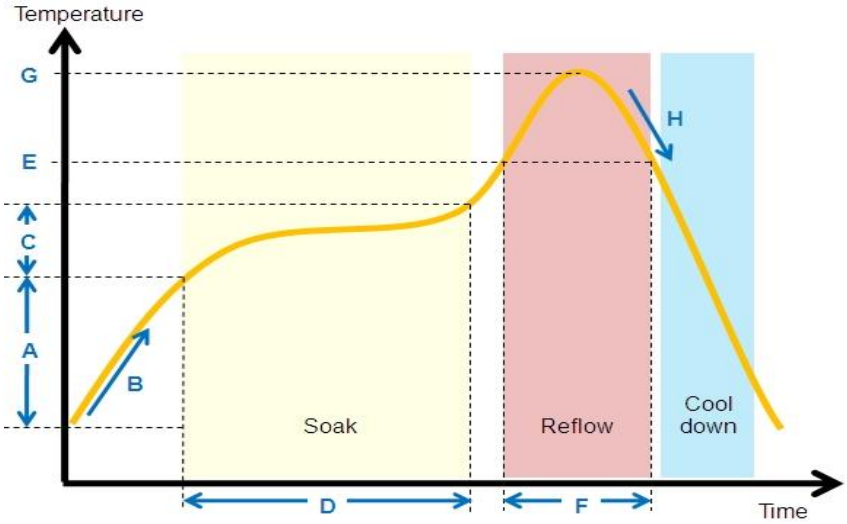

Reflow profile conditions of AXP515 device sample is given in the following table.

Table 10-1 AXP515 Reflow Profile Conditions

	QTI typical SMT reflow profile conditions (for reference only)	
	Step	Reflow condition
Environment	N2 purge reflow usage (yes/no)	Yes, N2 purge used
	If yes, O2 ppm level	O2 < 1500 ppm
A	Preheat ramp up temperature range	25°C -> 150°C
B	Preheat ramp up rate	1.5~2.5 °C/sec
C	Soak temperature range	150°C -> 190°C
D	Soak time	80~110 sec
E	Liquidus temperature	217°C
F	Time above liquidus	60-90 sec
G	Peak temperature	240-250°C
H	Cool down temperature rate	≤4°C/sec

Copyright©Shenzhen X-Powers Technology Co., Ltd. All Rights Reserved.

Copyright©2024 Shenzhen X-Powers Technology Co., Ltd. All Rights Reserved.

This documentation is the original work and copyrighted property of Shenzhen X-Powers Technology Co., Ltd. (“X-Powers”). No part of this document may be reproduced, modify, publish or transmitted in any form or by any means without prior written consent of X-Powers .

Trademarks and Permissions

X-Powers and the X-Powers logo (incomplete enumeration) are trademarks of Shenzhen X-Powers Technology Co., Ltd. All other trademarks, trade names, product or service names mentioned in this document are the property of their respective owners.

Important Notice and Disclaimer

The purchased products, services and features are stipulated by the contract made between X-Powers Technology Co.,Ltd (“X-Powers”) and the customer. All or part of the products, services and features described in this document may not be within the purchase scope or the usage scope. Please read the terms and conditions of the contract and relevant instructions carefully before using, and follow the instructions in this documentation strictly. X-Powers assumes no responsibility for the consequences of improper use (including but not limited to overvoltage, overclock, or excessive temperature).

The information in this document is provided just as a reference or typical applications, and is subject to change without notice. Every effort has been made in the preparation of this document to ensure accuracy of the contents. X-Powers is not responsible for any damage (including but not limited to indirect, incidental or special loss) or any infringement of third party rights arising from the use of this document. All statements, information, and recommendations in this document do not constitute a warranty or commitment of any kind, express or implied.

No license is granted by X-Powers herein express or implied or otherwise to any patent or intellectual property of X-Powers. Third party licences may be required to implement the solution/product. Customers shall be solely responsible to obtain all appropriately required third party licences. X-Powers shall not be liable for any licence fee or royalty due in respect of any required third party licence. X-Powers shall have no warranty, indemnity or other obligations with respect to third party licences.