AXP717B PMIC For Multi-Core High-Performance System

1 Features

- 3.9V–5.5V Input Operating Range
- Support TWSI(Two Wire Serial Interface)
- 4 DCDCS

  DCDC1: 0.5~1.54V, IMAX=4A

  DCDC2: 0.5~3.4V, IMAX=3A

  DCDC3: 0.5~1.84V, IMAX=1.5A

  DCDC4: 1.0~3.4V, IMAX=3A
- 14 LDOS

  RTCLDO: 1.8V/ 2.5V/ 3V/ 3.3V, 30mA; Support supplied by backup battery (button battery)

  A/B/CLDO: 0.5~3.5V, 0.1V/step

  ALDO2, BLDO1/3, CLDO1/3/4: IMAX=500mA

  ALDO1/4, BLDO4, CLDO2: IMAX=400mA

  ALDO3, BLDO2: IMAX=200mA

  CPUSLDO: for CPUs, 0.5~1.4V, IMAX=30mA, Supplied by DCDC3
- Startup sequence and default voltage of DCDC/LDO setting
- Protection

  Input Over-Voltage Protection

  Thermal Shutdown

  DCDC Over-Voltage/Under-Voltage Protection

  LDO Current Limit Protection

2 Applications

- Sweeper, Commercial display
- Automotive Electronics

3 Description

AXP717B is a highly integrated power management IC (PMIC) targeting at applications that require multi-channel power conversion outputs. It provides an easy and flexible power management solution for multi-core processors to meet the complex and accurate requirements of power control.

AXP717B supports 18 channel power outputs which include 4 channels DCDC and 14 channels LDO. To ensure the security and stability of the system, AXP717B provides multiple channels 14-bit ADC for voltage/temperature monitor and integrates protection circuits such as over-voltage protection (OVP), over-current protection (OCP) and over-temperature protection (OTP).

AXP717B supports TWSI for system to dynamically adjust output voltages, enable power outputs and configure interrupt condition.

Device Information

Part Number	Package	Body Size
AXP717B	QFN-52	6mm * 6mm

Simplified Application Diagram

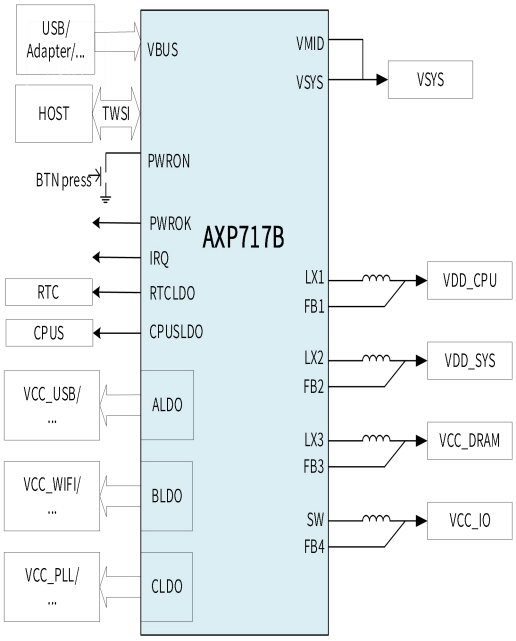

Copyright©Shenzhen X-Powers Technology Co., Ltd. All Rights Reserved.