REV.	DESCRIPTION	DATE
A	□□□□A.A□□□	2007/03/13
B	□□□□A.A□□□	2007/03/17
C	1. □□□□4□30□ 2. □□□□□□.	2007/05/12
D	□□□□□.	2007/05/16
E	□LCD□PIN□PITCH=1.27mm	2007/06/12
F	□□□□□□FPC□□□PIN□□□	2007/06/19
G	□□□□□	2007/06/29

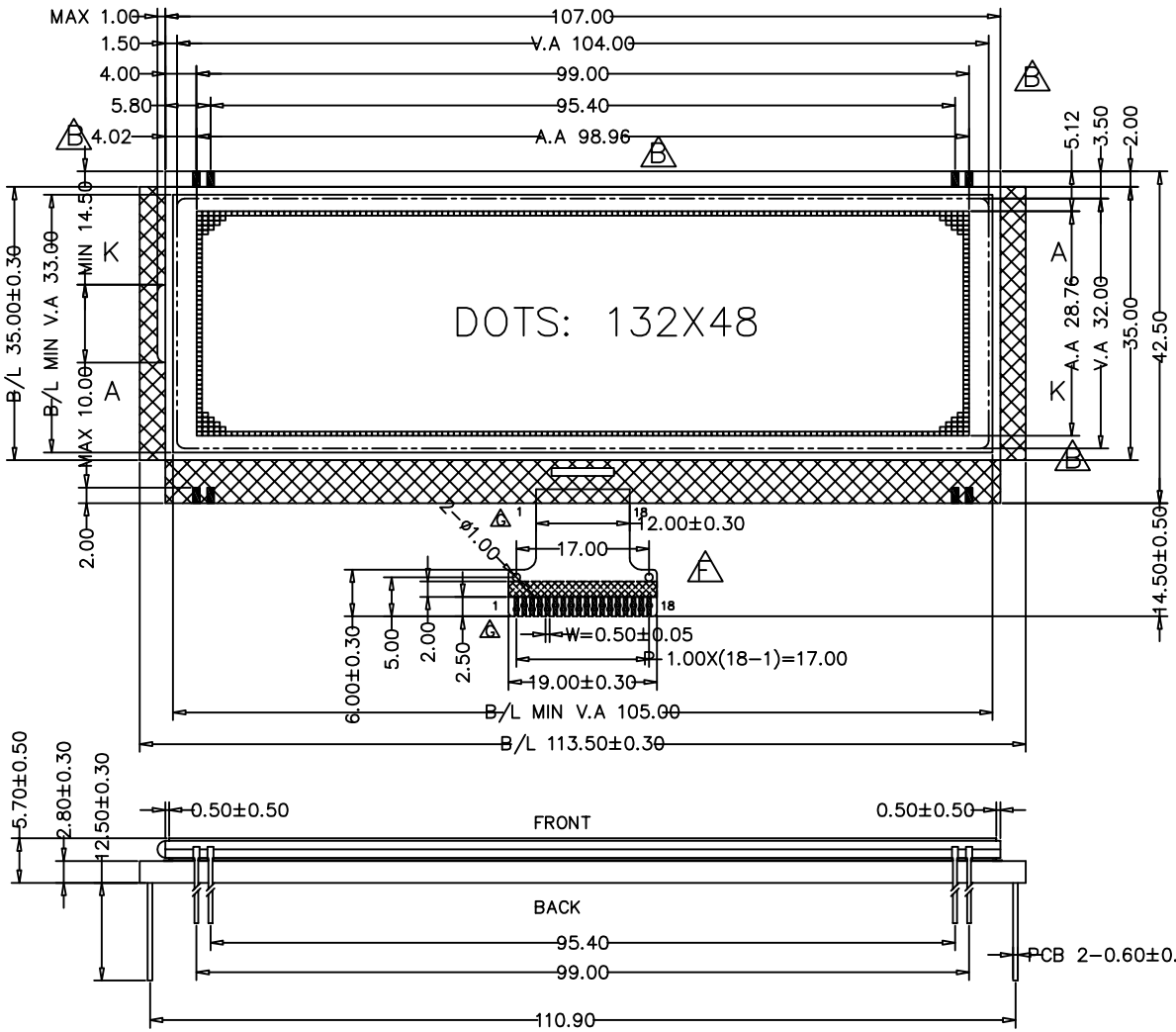

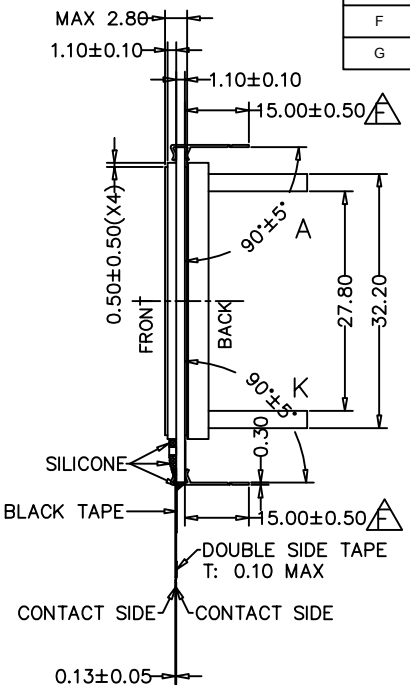

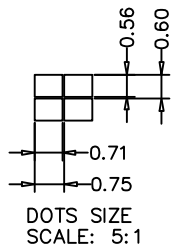

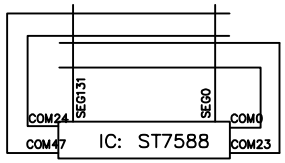

LCD LAYOUT

PIN	1	2	3	4	5	6	7	8	9
SYMBOL	V0	CAP4P	CAP2N	CAP2P	CAP1P	CAP1N	CAP5P	CAP3P	CAP3N

PIN	10	11	12	13	14	15	16	17	18
SYMBOL	VOUT	VDD	PS2	VSS	SDA	SCL	A0	RESB	CS

Specifications:
1. Display Mode: STN/Blue, Transmissive/Negative.
2. Viewing Angle: 4:00.
3. Drive Method: 1/48 Duty 1/7 Bias, Vop=9.0V, Vdd=3.0V.
4. Top: −20°C~+70°C, Tst: −30°C~+80°C.
5. Connector: COG+PIN.
6. Backlight: 2X2=4 pcs White LED Side Backlight; Test Condition: If=2X30=60mA@Vf=3.1±0.2V.
   Test Condition: If=2X30=60mA @ Vf=3.1±0.2V; Luminance: Min 30cd/m2(±LCD).
   Color Coordinate: X=0.270~0.310, Y=0.270~0.310; Uniformoty: 70%.
7. Drive IC: ST7588.

Unspecified Tolerance: ±0.20	UNITS: mm	DATE:	MODEL NUMBER :		SHEET:	1 Of 1
DESIGN BY:		2007/03/07	G13248E0			
CHECKED BY:					DATE:	2007/03/07
APPROVED BY:			DO NOT SCALE THIS DRAWING.	PROJECTION		