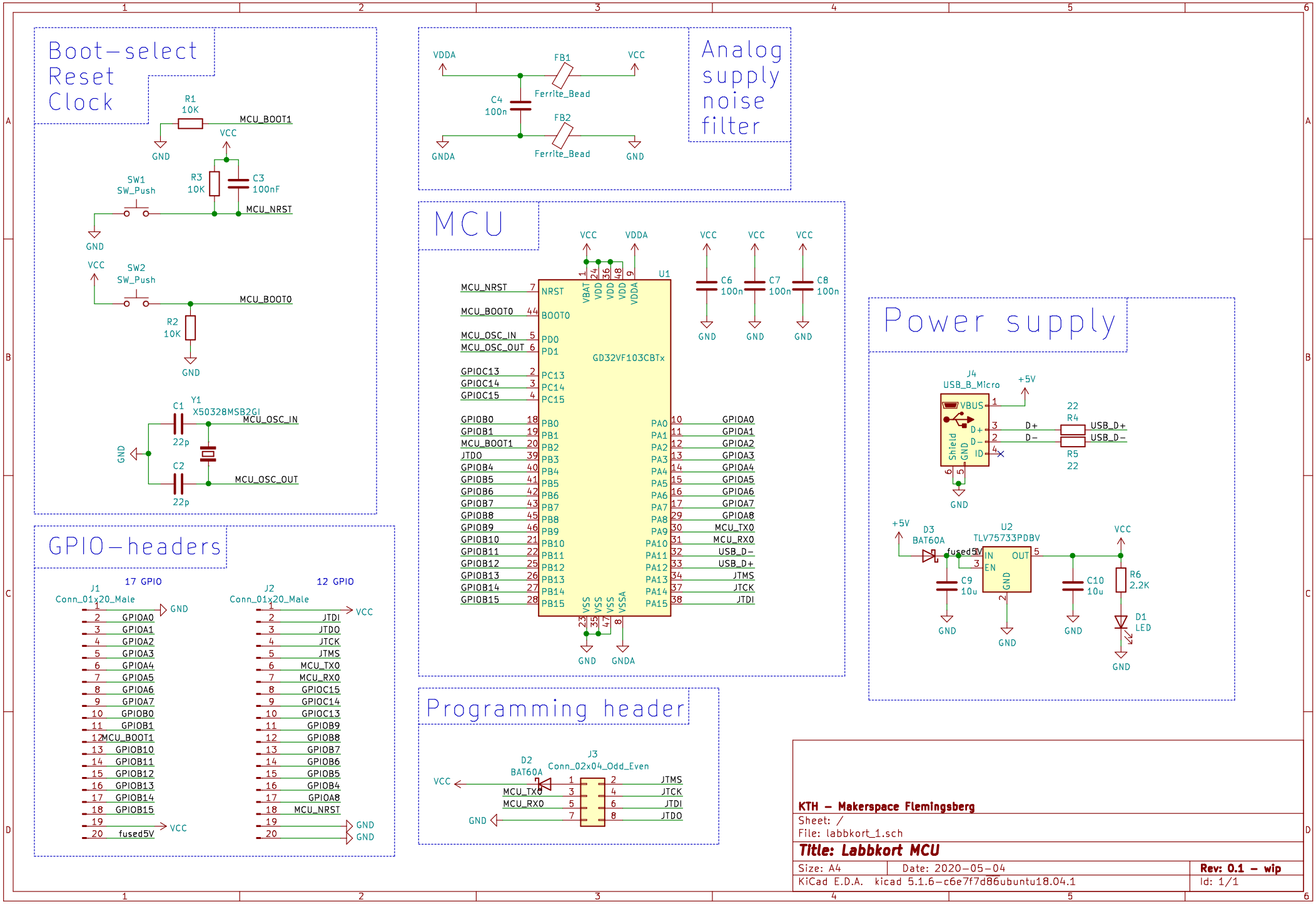
Boot-select
Reset
Clock
R1
10K
MCU_BOOT1
GND
VCC
SW1
SW_Push
R3
10K
C3
100nF
MCU_NRST
GND
VCC
SW2
SW_Push
MCU_BOOT0
R2
10K
GND
C1
Y1
X50328MSB2GI
MCU_OSC_IN
22p
GND
C2
MCU_OSC_OUT
22p
Analog
supply
noise
filter
VDDA
FB1
VCC
C4
100n
Ferrite_Bead
FB2
GNDA
Ferrite_Bead
GND
MCU
VCC
VDDA
U1
GD32VF103CBTx
MCU_NRST
MCU_BOOT0
MCU_OSC_IN
MCU_OSC_OUT
GPIOC13
GPIOC14
GPIOC15
GPIOB0
GPIOB1
MCU_BOOT1
JTDO
GPIOB4
GPIOB5
GPIOB6
GPIOB7
GPIOB8
GPIOB9
GPIOB10
GPIOB11
GPIOB12
GPIOB13
GPIOB14
GPIOB15
GPIOA0
GPIOA1
GPIOA2
GPIOA3
GPIOA4
GPIOA5
GPIOA6
GPIOA7
GPIOA8
MCU_TX0
MCU_RX0
USB_D-
USB_D+
JTMS
JTCK
JTDI
C6
100n
C7
100n
C8
100n
GND
GNDA
Power supply
J4
USB_B_Micro
+5V
VBUS
D+
D-
ID
Shield
GND
22
R4
R5
22
USB_D+
USB_D-
GND
+5V
D3
BAT60A
fused5V
U2
TLV75733PDBV
IN
EN
OUT
GND
C9
10u
C10
10u
R6
2.2K
D1
LED
GND
GPIO-headers
J1
Conn_01x20_Male
17 GPIO
GND
GPIOA0
GPIOA1
GPIOA2
GPIOA3
GPIOA4
GPIOA5
GPIOA6
GPIOA7
GPIOB0
GPIOB1
MCU_BOOT1
GPIOB10
GPIOB11
GPIOB12
GPIOB13
GPIOB14
GPIOB15
VCC
fused5V
J2
Conn_01x20_Male
12 GPIO
VCC
JTDI
JTDO
JTCK
JTMS
MCU_TX0
MCU_RX0
GPIOC15
GPIOC14
GPIOC13
GPIOB9
GPIOB8
GPIOB7
GPIOB6
GPIOB5
GPIOB4
GPIOA8
MCU_NRST
GND
GND
Programming header
D2
BAT60A
J3
Conn_02x04_Odd_Even
VCC
MCU_TX0
MCU_RX0
GND
JTMS
JTCK
JTDI
JTDO
KTH - Makerspace Flemingsberg
Sheet: /
File: labbkort_1.sch
Title: Labbkort MCU
Size: A4
Date: 2020-05-04
Rev: 0.1 - wip
KiCad E.D.A. kicad 5.1.6-c6e7f7d86ubuntu18.04.1
Id: 1/1