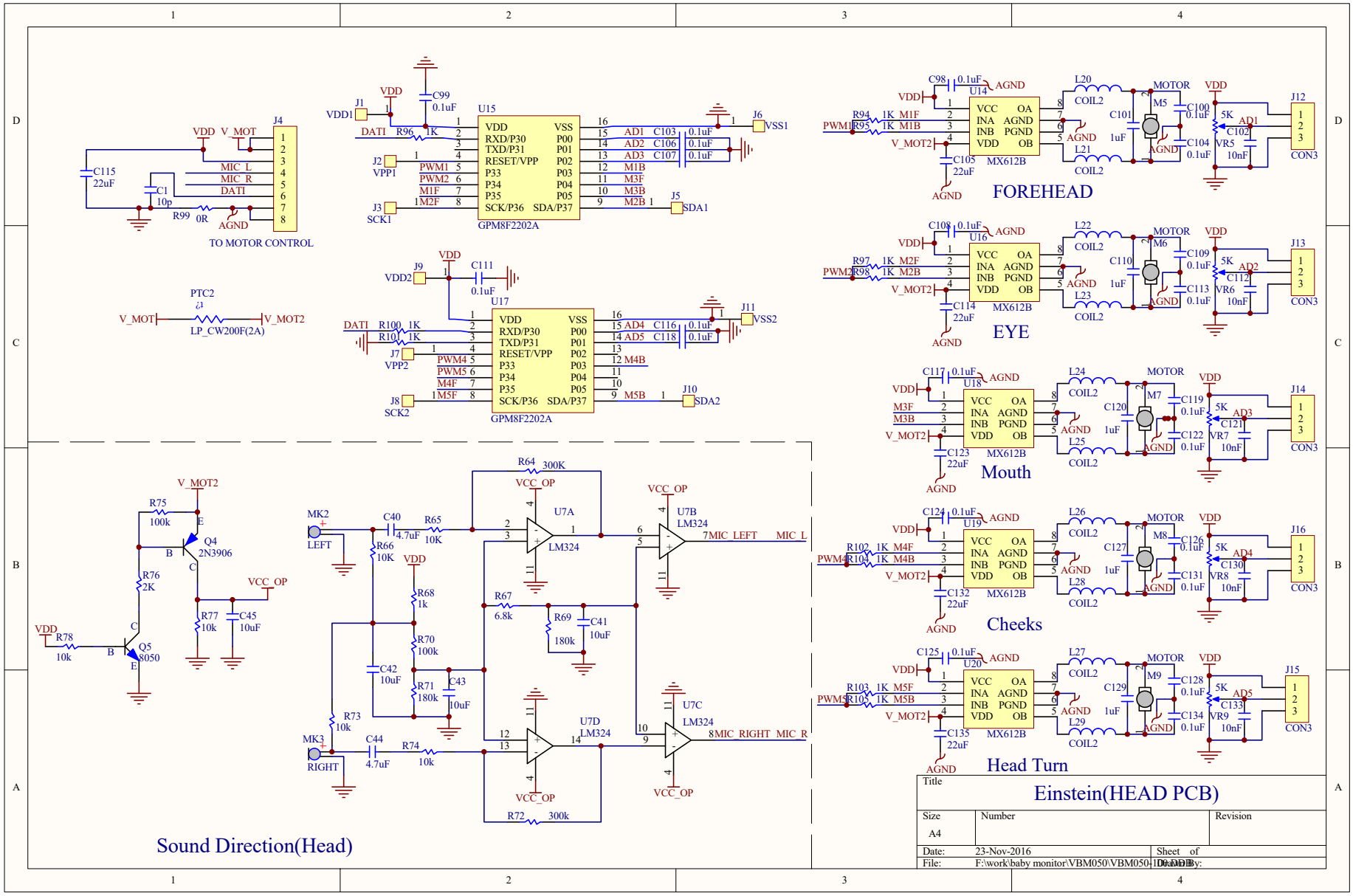
TO MOTOR CONTROL
J4
VDD V_MOT
MIC_L
MIC_R
DATI
AGND
C115 22uF
C1 10p
R99 0R
PTC2
V_MOT
V_MOT2
LP_CW200F(2A)
U15
GPM8F2202A
VDD RXD/P30 TXD/P31 RESET/VPP P33 P34 P35 SCK/P36
VSS P00 P01 P02 P03 P04 P05 SDA/P37
J1 VDD1
J2 VPP1
J3 SCK1
J5 SDA1
J6 VSS1
C99 0.1uF
R96 1K
PWM1 PWM2 M1F M2F
AD1 AD2 AD3 M1B M3F M3B M2B
C103 C106 C107
U17
J7 VPP2
J8 SCK2
J9 VDD2
J10 SDA2
J11 VSS2
C111 0.1uF
R100 1K
R101 1K
PWM4 PWM5 M4F M5F
AD4 AD5 M4B M5B
C116 C118
FOREHEAD
EYE
Mouth
Cheeks
Head Turn
U14 U16 U18 U19 U20
VCC OA INA AGND INB PGND VDD OB
MX612B
MOTOR
M5 M6 M7 M8 M9
COIL2
L20 L21 L22 L23 L24 L25 L26 L28 L27 L29
C101 C102 C104 C105 C108 C109 C110 C112 C113 C114 C117 C119 C120 C121 C122 C123 C124 C126 C127 C130 C131 C132 C125 C128 C129 C133 C134 C135
VR5 VR6 VR7 VR8 VR9
J12 J13 J14 J16 J15
CON3
Sound Direction(Head)
MK2 LEFT
MK3 RIGHT
U7A U7B U7C U7D
LM324
MIC_LEFT MIC_L
MIC_RIGHT MIC_R
VCC_OP
Q4 2N3906
Q5 8050
R64 300K
R72 300k
Title
Einstein(HEAD PCB)
Size A4
Number
Revision
Date: 23-Nov-2016
Sheet of
File: F:\work\baby monitor\VBM050\VBM050-1.DDB
Drawn By: