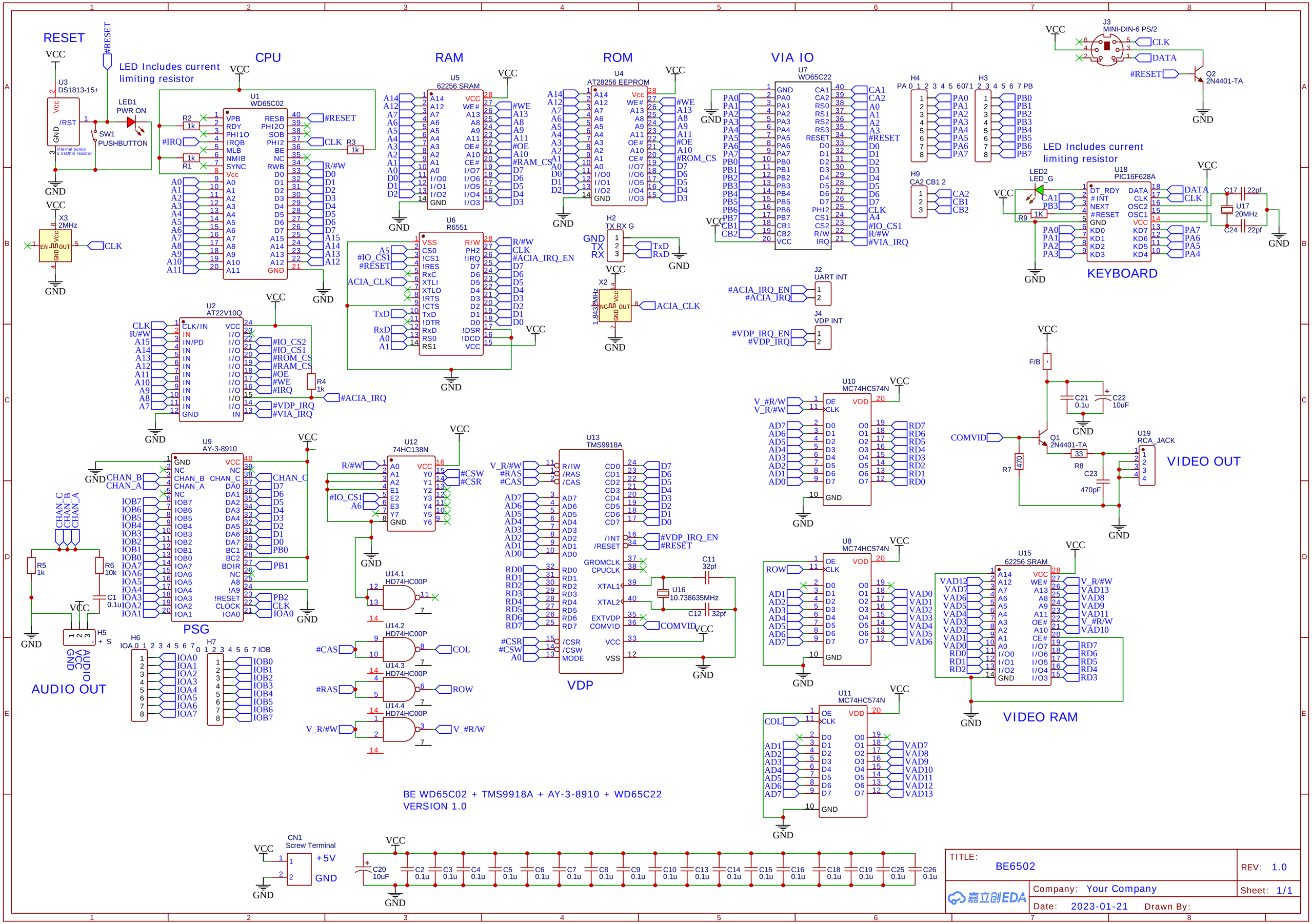
RESET
CPU
RAM
ROM
VIA IO
KEYBOARD
VIDEO OUT
PSG
AUDIO OUT
VDP
VIDEO RAM
U1 WD65C02
U2 AT22V10Q
U3 DS1813-15+
U4 AT28256 EEPROM
U5 62256 SRAM
U6 R6551
U7 WD65C22
U8 MC74HC574N
U9 AY-3-8910
U10 MC74HC574N
U11 MC74HC574N
U12 74HC138N
U13 TMS9918A
U14.1 HD74HC00P
U14.2 HD74HC00P
U14.3 HD74HC00P
U14.4 HD74HC00P
U15 62256 SRAM
U16 10.738635MHz
U17 20MHz
U18 PIC16F628A
U19 RCA_JACK
J3 MINI-DIN-6 PS/2
Q1 2N4401-TA
Q2 2N4401-TA
LED1 PWR ON
LED2 LED_G
SW1 PUSHBUTTON
X2 1.843MHz
X3 2MHz
J2 UART INT
J4 VDP INT
H2 TX RX G
H4
H9
CN1 Screw Terminal
BE WD65C02 + TMS9918A + AY-3-8910 + WD65C22
VERSION 1.0
TITLE: BE6502
REV: 1.0
Company: Your Company
Sheet: 1/1
Date: 2023-01-21
Drawn By: