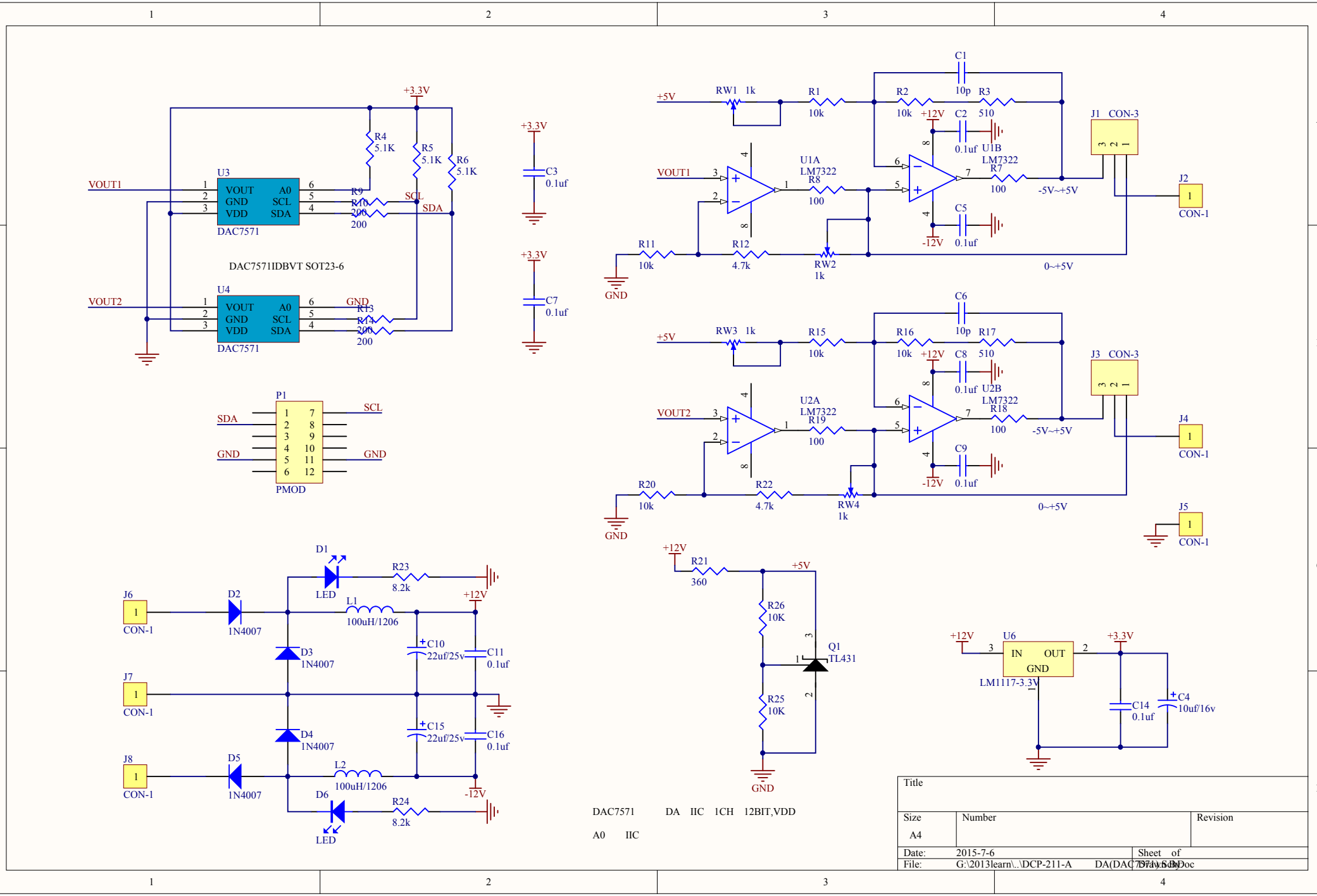
+3.3V
R4 5.1K
R5 5.1K
R6 5.1K
U3
VOUT1
VOUT GND VDD
A0 SCL SDA
R9 200
R10 200
SCL
SDA
DAC7571
DAC7571IDBVT SOT23-6
U4
VOUT2
GND
R13 200
R14 200
DAC7571
C3 0.1uf
C7 0.1uf
P1
SDA
GND
SCL
PMOD
+5V
RW1 1k
R1 10k
R2 10k
C1 10p
R3 510
+12V
C2 0.1uf
U1B LM7322
U1A LM7322
R8 100
R7 100
C5 0.1uf
-12V
-5V~+5V
J1 CON-3
J2 CON-1
R11 10k
R12 4.7k
RW2 1k
0~+5V
C6 10p
RW3 1k
R15 10k
R16 10k
R17 510
C8 0.1uf
U2B LM7322
U2A LM7322
R19 100
R18 100
C9 0.1uf
J3 CON-3
J4 CON-1
R20 10k
R22 4.7k
RW4 1k
J5 CON-1
D1 LED
R23 8.2k
J6 CON-1
D2 1N4007
L1 100uH/1206
D3 1N4007
C10 22uf/25v
C11 0.1uf
J7 CON-1
D4 1N4007
C15 22uf/25v
C16 0.1uf
J8 CON-1
D5 1N4007
L2 100uH/1206
D6 LED
R24 8.2k
R21 360
R26 10K
R25 10K
Q1 TL431
U6
IN OUT GND
LM1117-3.3V
C14 0.1uf
C4 10uf/16v
DAC7571 DA IIC 1CH 12BIT,VDD
A0 IIC
Title
Size A4
Number
Revision
Date: 2015-7-6
Sheet of
File: G:\2013learn\..\DCP-211-A DA(DAC7571).SchDoc
Drawn By: