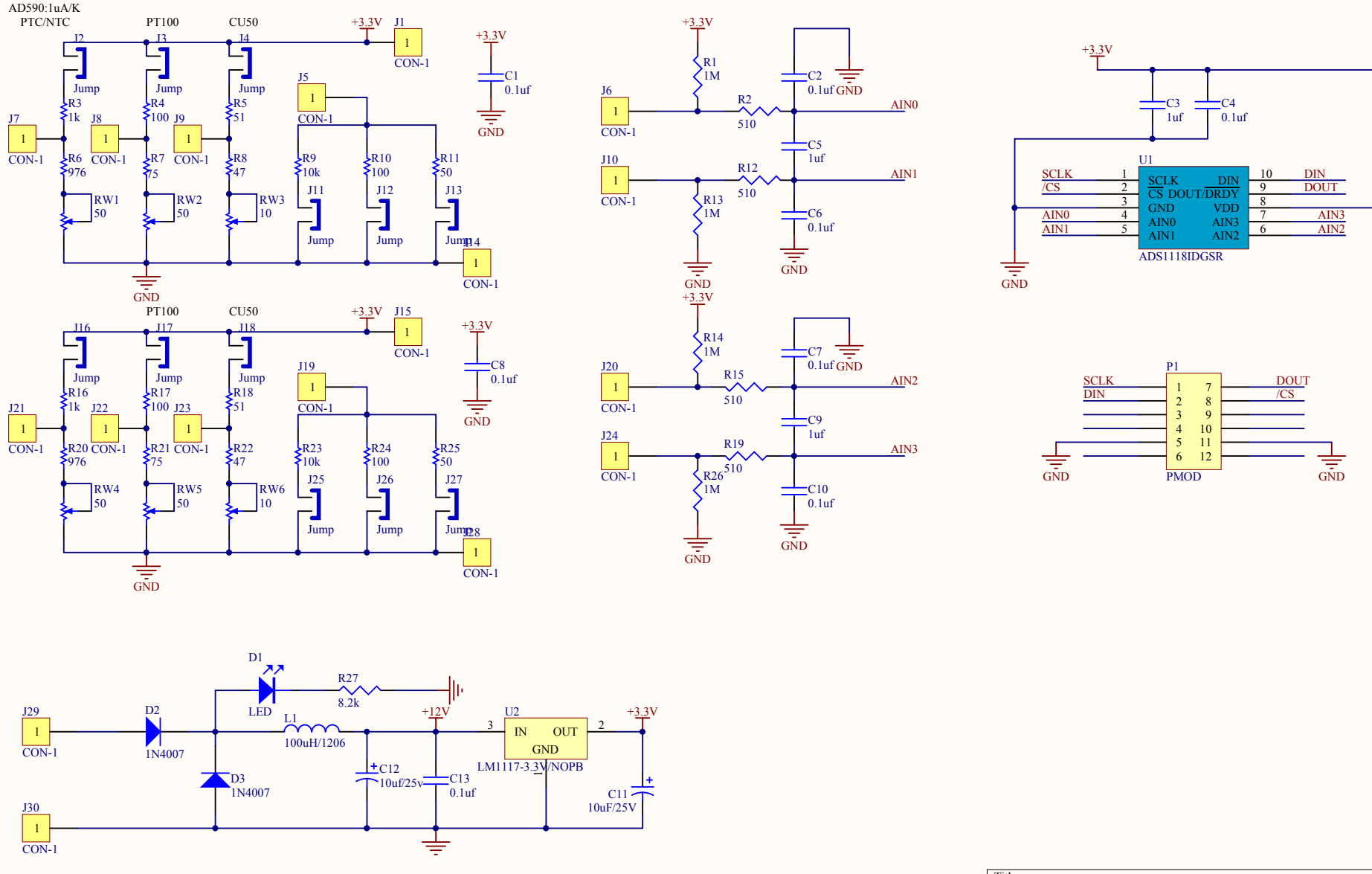

Title		
Size A4	Number	Revision
Date: 2013-4-1	Sheet of	
File: G:\2013learn\..\DCP-208-A AD	Drawn By: Liu HaiYang	ADS1118 2013.3.14.SchD