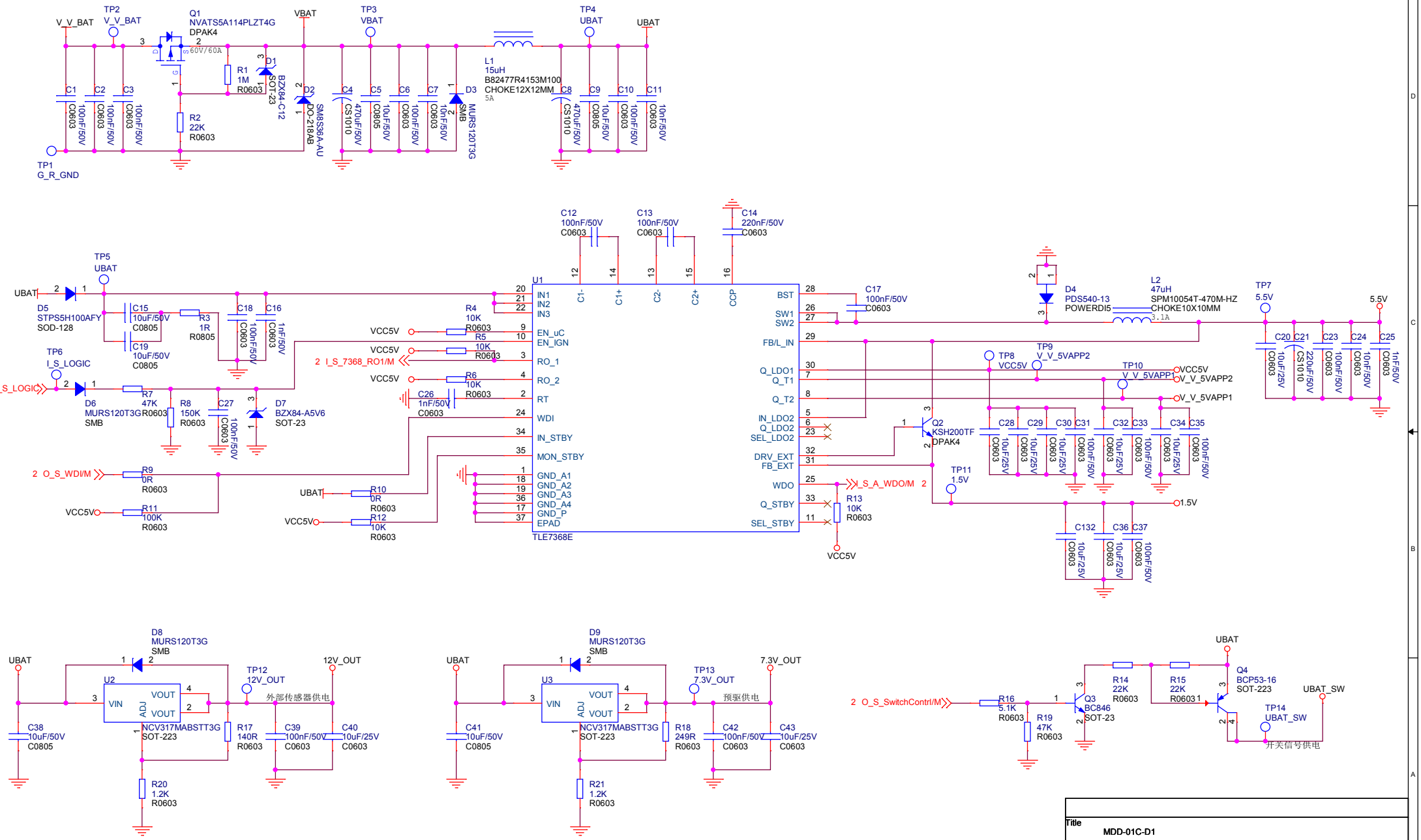

Title	MDD-01C-D1	
Size B	Document Number <Doc>	Rev V0
Date: Thursday, December 25, 2025	Sheet 1 of 11	

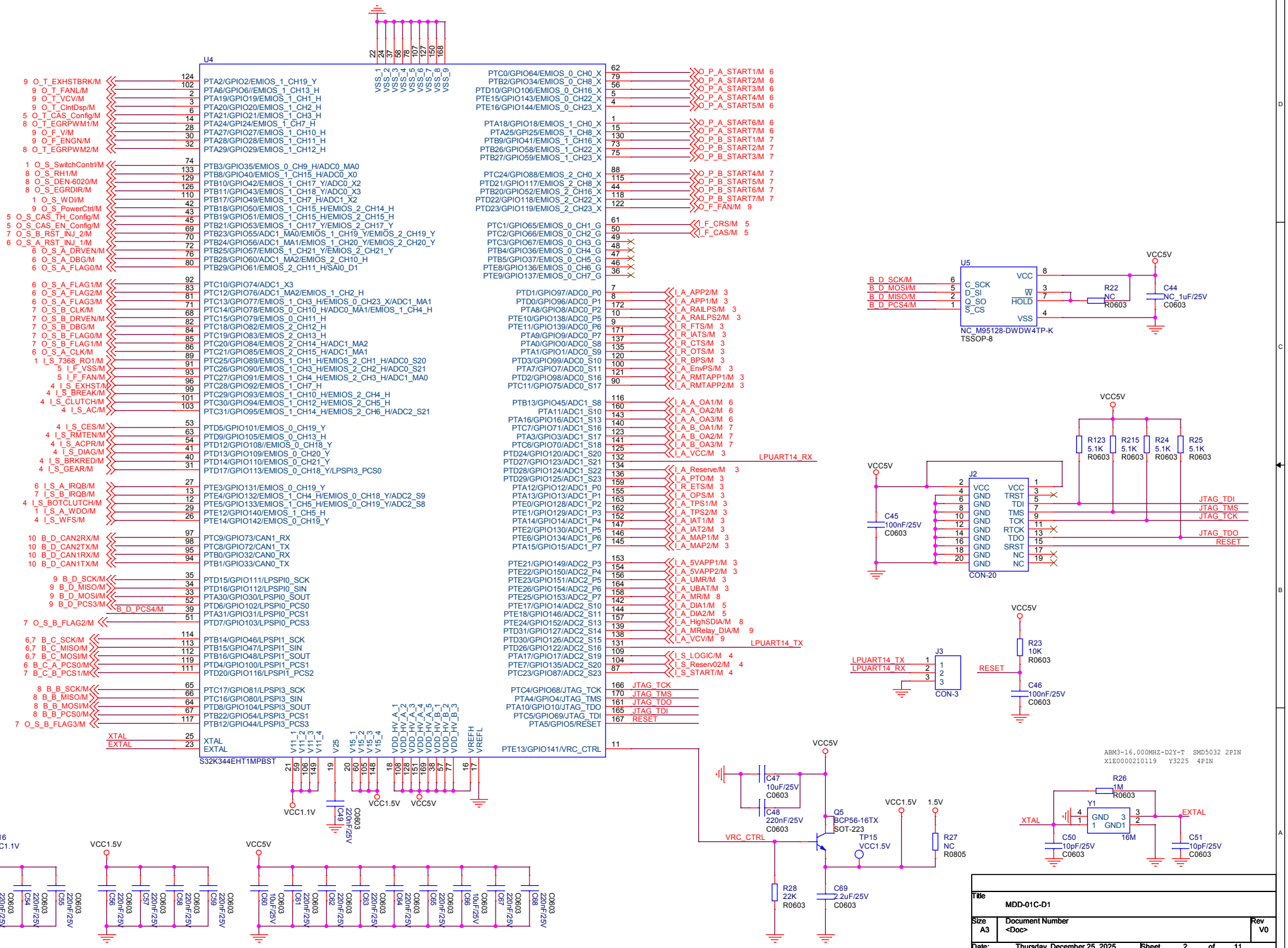
U4
S32K344EHT1MPBST
PTA2/GPIO2/EMIOS_1_CH19_Y
PTA6/GPIO6//EMIOS_1_CH13_H
PTA19/GPIO19/EMIOS_1_CH1_H
PTA20/GPIO20/EMIOS_1_CH2_H
PTA21/GPIO21/EMIOS_1_CH3_H
PTA24/GPI24/EMIOS_1_CH7_H
PTA27/GPIO27/EMIOS_1_CH10_H
PTA28/GPIO28/EMIOS_1_CH11_H
PTA29/GPIO29/EMIOS_1_CH12_H
PTB3/GPIO35/EMIOS_0_CH9_H/ADC0_MA0
PTB8/GPIO40/EMIOS_1_CH15_H/ADC0_X0
PTB10/GPIO42/EMIOS_1_CH17_Y/ADC0_X2
PTB11/GPIO43/EMIOS_1_CH18_Y/ADC0_X3
PTB17/GPIO49/EMIOS_1_CH7_H/ADC1_X2
PTB18/GPIO50/EMIOS_1_CH15_H/EMIOS_2_CH14_H
PTB19/GPIO51/EMIOS_1_CH15_H/EMIOS_2_CH15_H
PTB21/GPIO53/EMIOS_1_CH17_Y/EMIOS_2_CH17_Y
PTB23/GPIO55/ADC1_MA0/EMIOS_1_CH19_Y/EMIOS_2_CH19_Y
PTB24/GPIO56/ADC1_MA1/EMIOS_1_CH20_Y/EMIOS_2_CH20_Y
PTB25/GPIO57/EMIOS_1_CH21_Y/EMIOS_2_CH21_Y
PTB28/GPIO60/ADC1_MA2/EMIOS_2_CH10_H
PTB29/GPIO61/EMIOS_2_CH11_H/SAI0_D1
PTC10/GPIO74/ADC1_X3
PTC12/GPIO76/ADC1_MA2/EMIOS_1_CH2_H
PTC13/GPIO77/EMIOS_1_CH3_H/EMIOS_0_CH23_X/ADC1_MA1
PTC14/GPIO78/EMIOS_0_CH10_H/ADC0_MA1/EMIOS_1_CH4_H
PTC15/GPIO79/EMIOS_0_CH11_H
PTC18/GPIO82/EMIOS_2_CH12_H
PTC19/GPIO83/EMIOS_2_CH13_H
PTC20/GPIO84/EMIOS_2_CH14_H/ADC1_MA2
PTC21/GPIO85/EMIOS_2_CH15_H/ADC1_MA1
PTC25/GPIO89/EMIOS_1_CH1_H/EMIOS_2_CH1_H/ADC0_S20
PTC26/GPIO90/EMIOS_1_CH3_H/EMIOS_2_CH2_H/ADC0_S21
PTC27/GPIO91/EMIOS_1_CH4_H/EMIOS_2_CH3_H/ADC1_MA0
PTC28/GPIO92/EMIOS_1_CH7_H
PTC29/GPIO93/EMIOS_1_CH10_H/EMIOS_2_CH4_H
PTC30/GPIO94/EMIOS_1_CH12_H/EMIOS_2_CH5_H
PTC31/GPIO95/EMIOS_1_CH14_H/EMIOS_2_CH6_H/ADC2_S21
PTD5/GPIO101/EMIOS_0_CH19_Y
PTD9/GPIO105/EMIOS_0_CH13_H
PTD12/GPIO108/EMIOS_0_CH18_Y
PTD13/GPIO109/EMIOS_0_CH20_Y
PTD14/GPIO110/EMIOS_0_CH21_Y
PTD17/GPIO113/EMIOS_0_CH18_Y/LPSPI3_PCS0
PTE3/GPIO131/EMIOS_0_CH19_Y
PTE4/GPIO132/EMIOS_1_CH4_H/EMIOS_0_CH18_Y/ADC2_S9
PTE5/GPIO133/EMIOS_1_CH5_H/EMIOS_0_CH19_Y/ADC2_S8
PTE12/GPIO140/EMIOS_1_CH5_H
PTE14/GPIO142/EMIOS_0_CH19_Y
PTC9/GPIO73/CAN1_RX
PTC8/GPIO72/CAN1_TX
PTB0/GPIO32/CAN0_RX
PTB1/GPIO33/CAN0_TX
PTD15/GPIO111/LPSPI0_SCK
PTD16/GPIO112/LPSPI0_SIN
PTA30/GPIO30/LPSPI0_SOUT
PTD6/GPIO102/LPSPI0_PCS0
PTA31/GPIO31/LPSPI0_PCS1
PTD7/GPIO103/LPSPI0_PCS3
PTB14/GPIO46/LPSPI1_SCK
PTB15/GPIO47/LPSPI1_SIN
PTB16/GPIO48/LPSPI1_SOUT
PTD4/GPIO100/LPSPI1_PCS1
PTD20/GPIO116/LPSPI1_PCS2
PTC17/GPIO81/LPSPI3_SCK
PTC16/GPIO80/LPSPI3_SIN
PTD8/GPIO104/LPSPI3_SOUT
PTB22/GPIO54/LPSPI3_PCS1
PTB12/GPIO44/LPSPI3_PCS3
XTAL
EXTAL
PTC0/GPIO64/EMIOS_0_CH0_X
PTB2/GPIO34/EMIOS_0_CH8_X
PTD10/GPIO106/EMIOS_0_CH16_X
PTE15/GPIO143/EMIOS_0_CH22_X
PTE16/GPIO144/EMIOS_0_CH23_X
PTA18/GPIO18/EMIOS_1_CH0_X
PTA25/GPI25/EMIOS_1_CH8_X
PTB9/GPIO41/EMIOS_1_CH16_X
PTB26/GPIO58/EMIOS_1_CH22_X
PTB27/GPIO59/EMIOS_1_CH23_X
PTC24/GPIO88/EMIOS_2_CH0_X
PTD21/GPIO117/EMIOS_2_CH8_X
PTB20/GPIO52/EMIOS_2_CH16_X
PTD22/GPIO118/EMIOS_2_CH22_X
PTD23/GPIO119/EMIOS_2_CH23_X
PTC1/GPIO65/EMIOS_0_CH1_G
PTC2/GPIO66/EMIOS_0_CH2_G
PTC3/GPIO67/EMIOS_0_CH3_G
PTB4/GPIO36/EMIOS_0_CH4_G
PTB5/GPIO37/EMIOS_0_CH5_G
PTE8/GPIO136/EMIOS_0_CH6_G
PTE9/GPIO137/EMIOS_0_CH7_G
PTD1/GPIO97/ADC0_P0
PTD0/GPIO96/ADC0_P1
PTA8/GPIO8/ADC0_P2
PTE10/GPIO138/ADC0_P5
PTE11/GPIO139/ADC0_P6
PTA9/GPIO9/ADC0_P7
PTA0/GPIO0/ADC0_S8
PTA1/GPIO1/ADC0_S9
PTD3/GPIO99/ADC0_S10
PTA7/GPIO7/ADC0_S11
PTD2/GPIO98/ADC0_S16
PTC11/GPIO75/ADC0_S17
PTB13/GPIO45/ADC1_S8
PTA11/ADC1_S10
PTA16/GPIO16/ADC1_S13
PTC7/GPIO71/ADC1_S16
PTA3/GPIO3/ADC1_S17
PTC6/GPIO70/ADC1_S18
PTD24/GPIO120/ADC1_S20
PTD27/GPIO123/ADC1_S21
PTD28/GPIO124/ADC1_S22
PTD29/GPIO125/ADC1_S23
PTA12/GPIO12/ADC1_P0
PTA13/GPIO13/ADC1_P1
PTE0/GPIO128/ADC1_P2
PTE1/GPIO129/ADC1_P3
PTA14/GPIO14/ADC1_P4
PTE2/GPIO130/ADC1_P5
PTE6/GPIO134/ADC1_P6
PTA15/GPIO15/ADC1_P7
PTE21/GPIO149/ADC2_P3
PTE22/GPIO150/ADC2_P4
PTE23/GPIO151/ADC2_P5
PTE26/GPIO154/ADC2_P6
PTE25/GPIO153/ADC2_P7
PTE17/GPIO14/ADC2_S10
PTE18/GPIO146/ADC2_S11
PTE24/GPIO152/ADC2_S13
PTD31/GPIO127/ADC2_S14
PTD30/GPIO126/ADC2_S15
PTD26/GPIO122/ADC2_S16
PTA17/GPIO17/ADC2_S19
PTE7/GPIO135/ADC2_S20
PTC23/GPIO87/ADC2_S23
PTC4/GPIO68/JTAG_TCK
PTA4/GPIO4/JTAG_TMS
PTA10/GPIO10/JTAG_TDO
PTC5/GPIO69/JTAG_TDI
PTA5/GPIO5/RESET
PTE13/GPIO141/VRC_CTRL
VCC1.1V
VCC1.5V
VCC5V
C49 220nF/25V C0603
TP16 VCC1.1V
C52 2.2uF/25V C0603
C53 220nF/25V C0603
C54 220nF/25V C0603
C55 220nF/25V C0603
C56 220nF/25V C0603
C57 220nF/25V C0603
C58 220nF/25V C0603
C59 220nF/25V C0603
C60 10uF/25V C0603
C61 220nF/25V C0603
C62 220nF/25V C0603
C63 220nF/25V C0603
C64 220nF/25V C0603
C65 220nF/25V C0603
C66 10uF/25V C0603
C67 220nF/25V C0603
C68 220nF/25V C0603
U5
TSSOP-8
NC_M95128-DWDW4TP-K
B_D_SCK/M
B_D_MOSI/M
B_D_MISO/M
B_D_PCS4/M
C_SCK
D_SI
Q_SO
S_CS
VCC
W
HOLD
VSS
R22 NC R0603
C44 NC_1uF/25V C0603
J2
CON-20
VCC GND TRST TDI TMS TCK RTCK TDO SRST NC
JTAG_TDI
JTAG_TMS
JTAG_TCK
JTAG_TDO
RESET
R123 5.1K R0603
R215 5.1K R0603
R24 5.1K R0603
R25 5.1K R0603
C45 100nF/25V C0603
J3
CON-3
LPUART14_TX
LPUART14_RX
R23 10K R0603
C46 100nF/25V C0603
ABM3-16.000MHZ-D2Y-T SMD5032 2PIN
X1E0000210119 Y3225 4PIN
R26 1M R0603
Y1
GND GND1
16M
XTAL
EXTAL
C50 10pF/25V C0603
C51 10pF/25V C0603
C47 10uF/25V C0603
C48 220nF/25V C0603
Q5 BCP56-16TX SOT-223
VRC_CTRL
TP15 VCC1.5V
VCC1.5V
1.5V
R27 NC R0805
R28 22K R0603
C69 2.2uF/25V C0603
Title
MDD-01C-D1
Size A3
Document Number <Doc>
Rev V0
Date: Thursday, December 25, 2025
Sheet 2 of 11

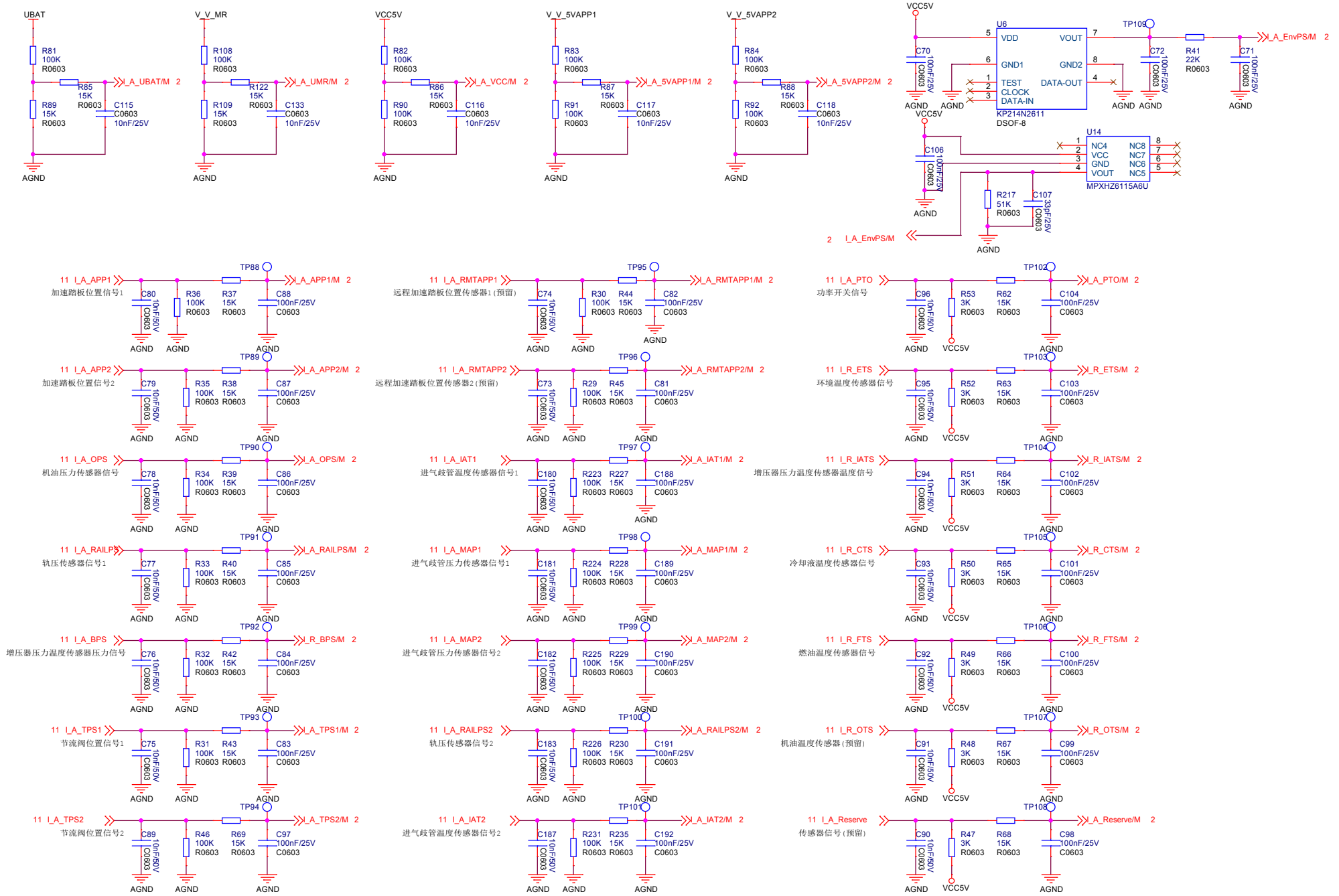

Title	MDD-01C-D1	
Size A3	Document Number <Doc>	Rev V0
Date: Thursday, December 25, 2025	Sheet 3 of 11	

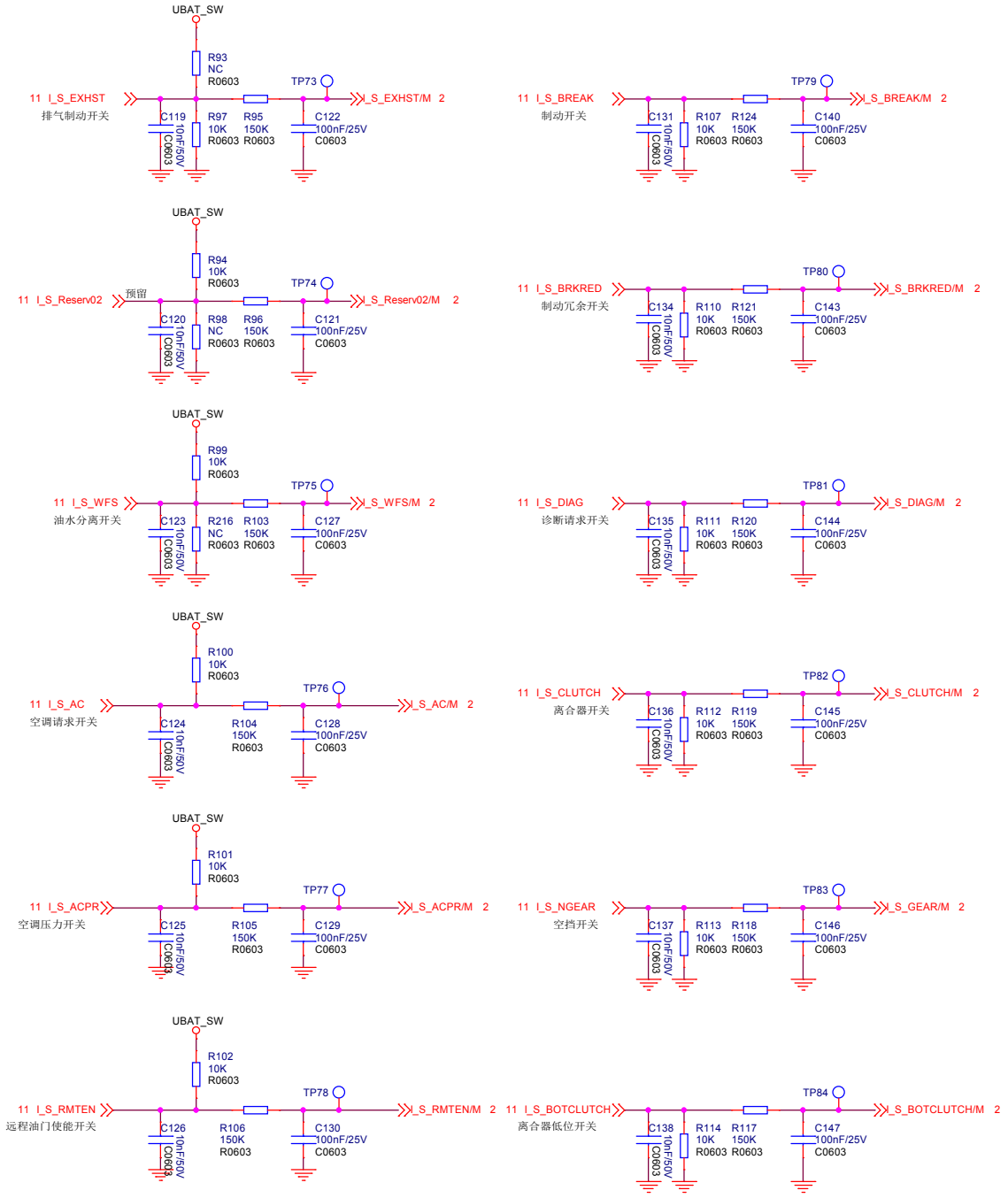

Title	MDD-01C-D1	
Size A3	Document Number <Doc>	Rev V0
Date: Thursday, December 25, 2025	Sheet 4 of 11	

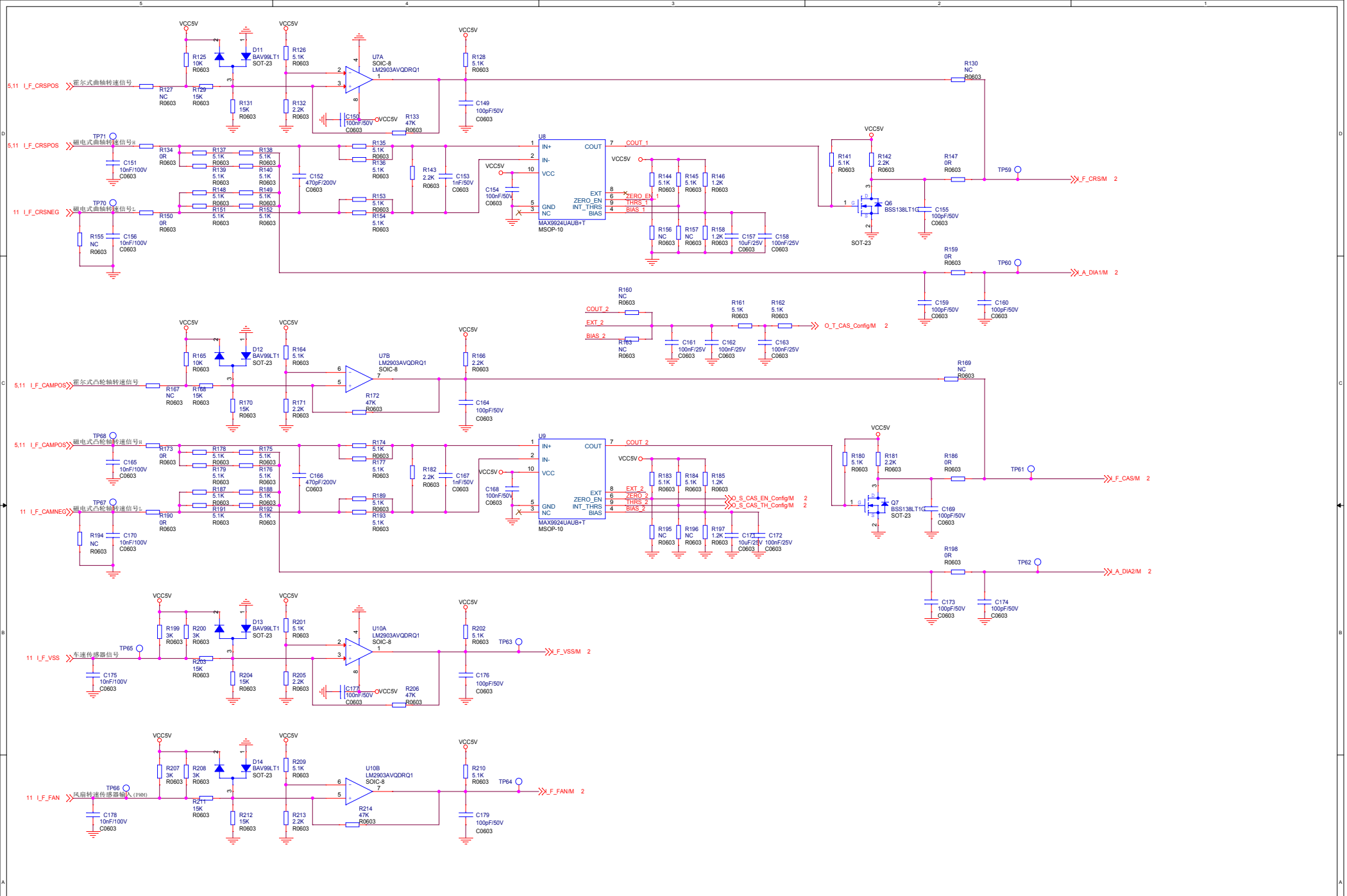

Title	MDD-01C-D1	
Size C	Document Number <Doc>	Rev V0
Date: Thursday, December 25, 2025	Sheet 5 of 11	

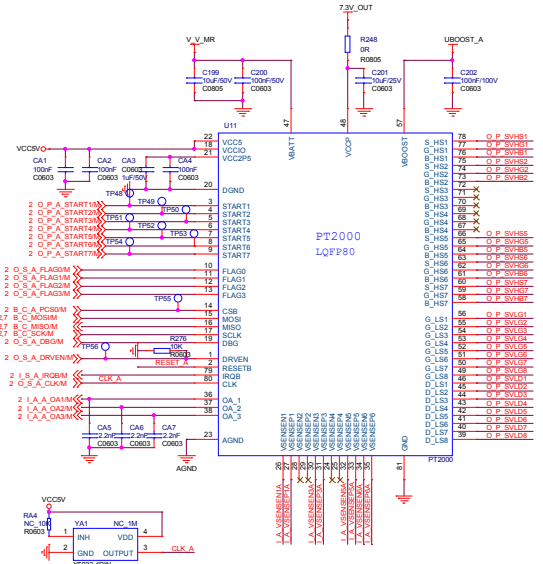

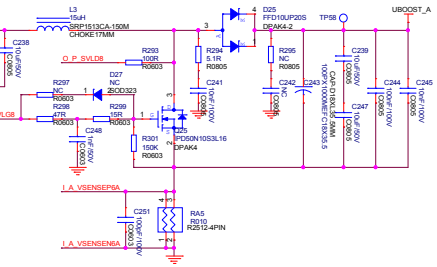

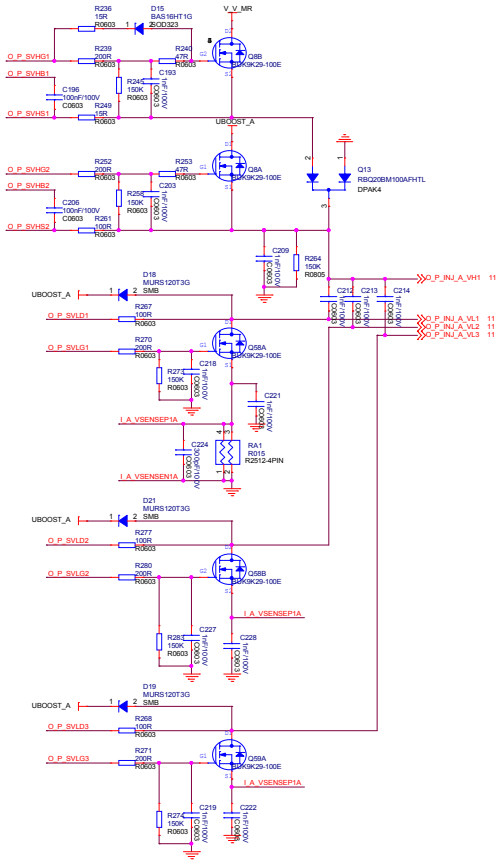

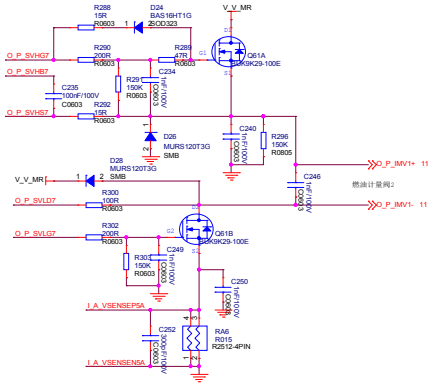

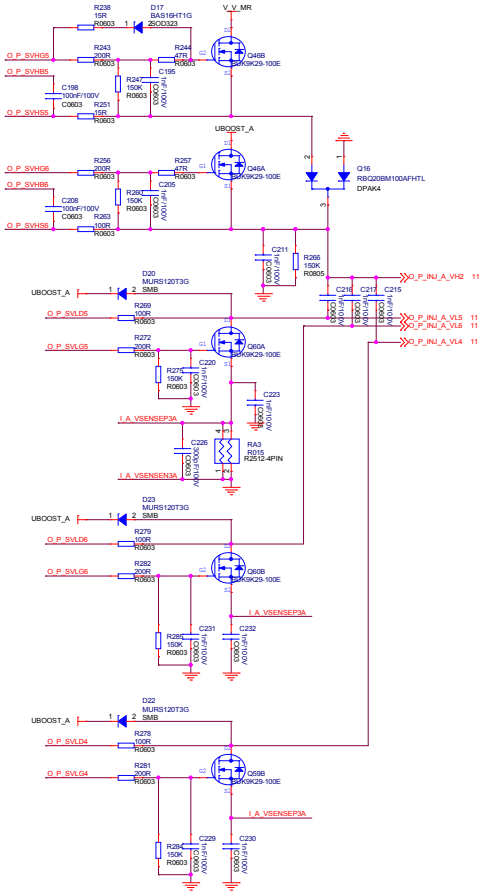

Title	MDD-01C-D1		
Size	Document Number		Rev
	Custom<Doc>		V0
Date:	Thursday, December 25, 2025	Sheet 6 of 11	

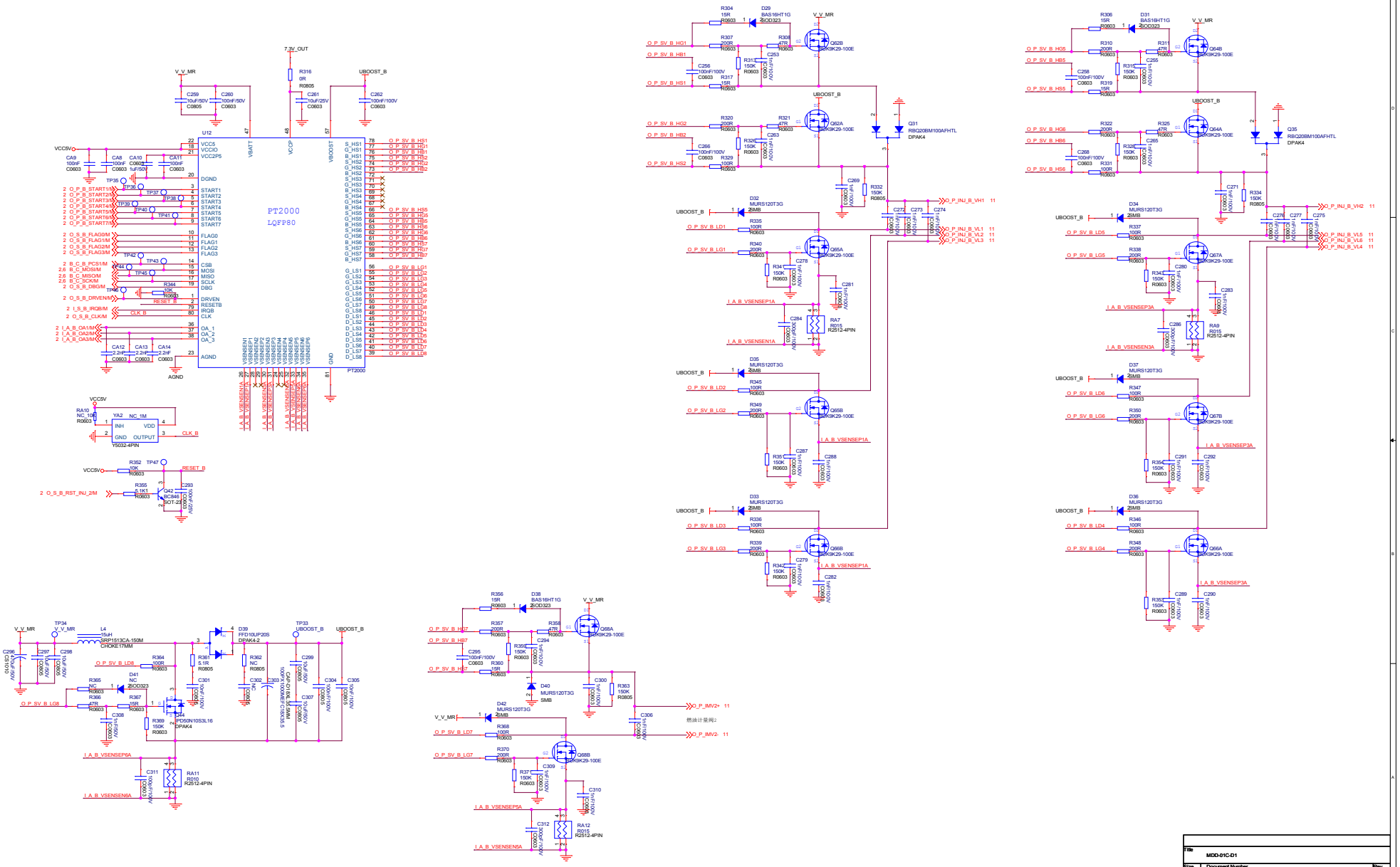

File	MDD-01C-D1
Size	Document Number
Custom	<Doc>
Rev	V0
Date:	Thursday, December 25, 2025
Sheet	7 of 11

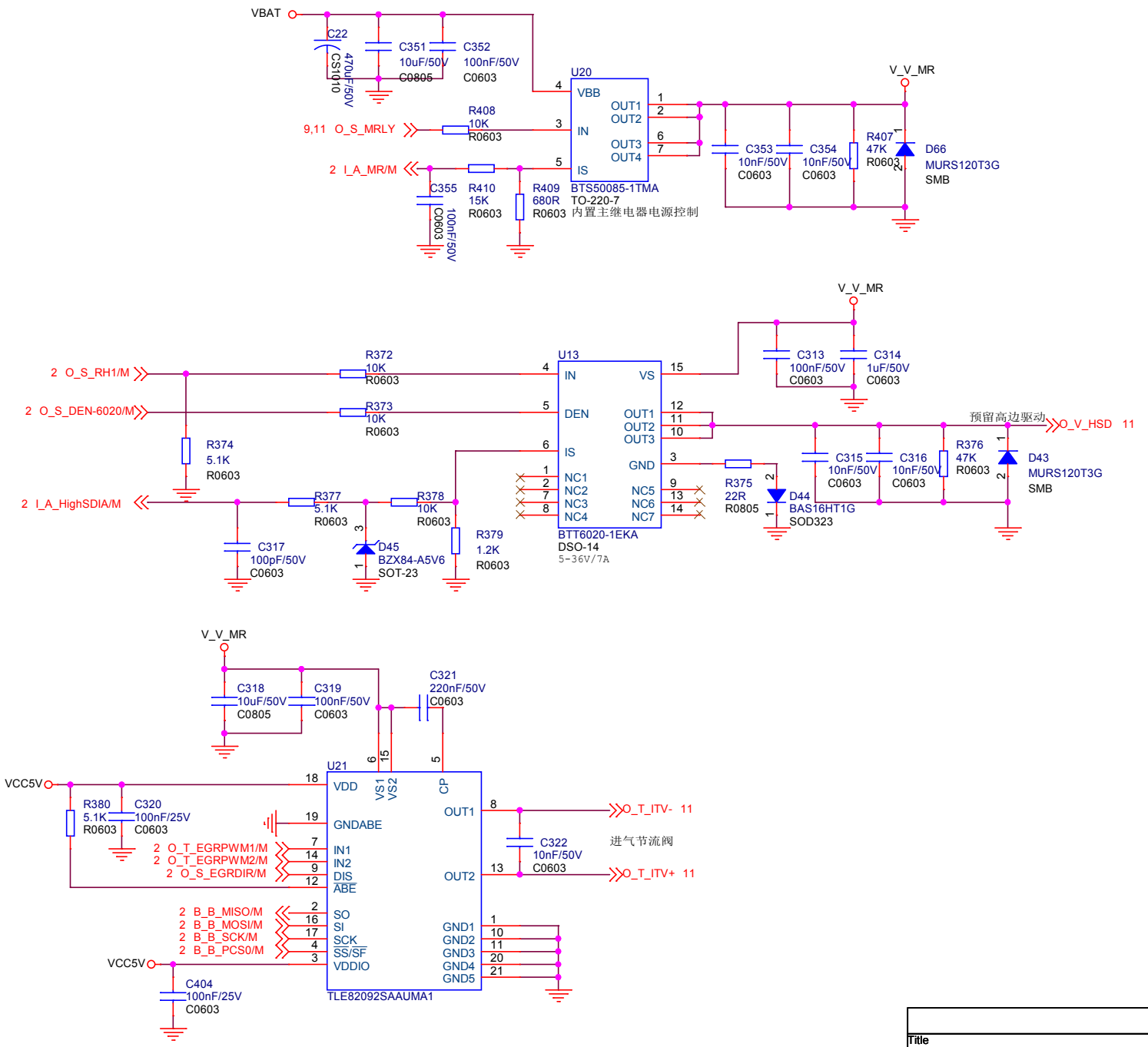

Title	MDD-01C-D1	
Size Custom	Document Number <Doc>	Rev V0
Date: Thursday, December 25, 2025	Sheet 8 of 11	

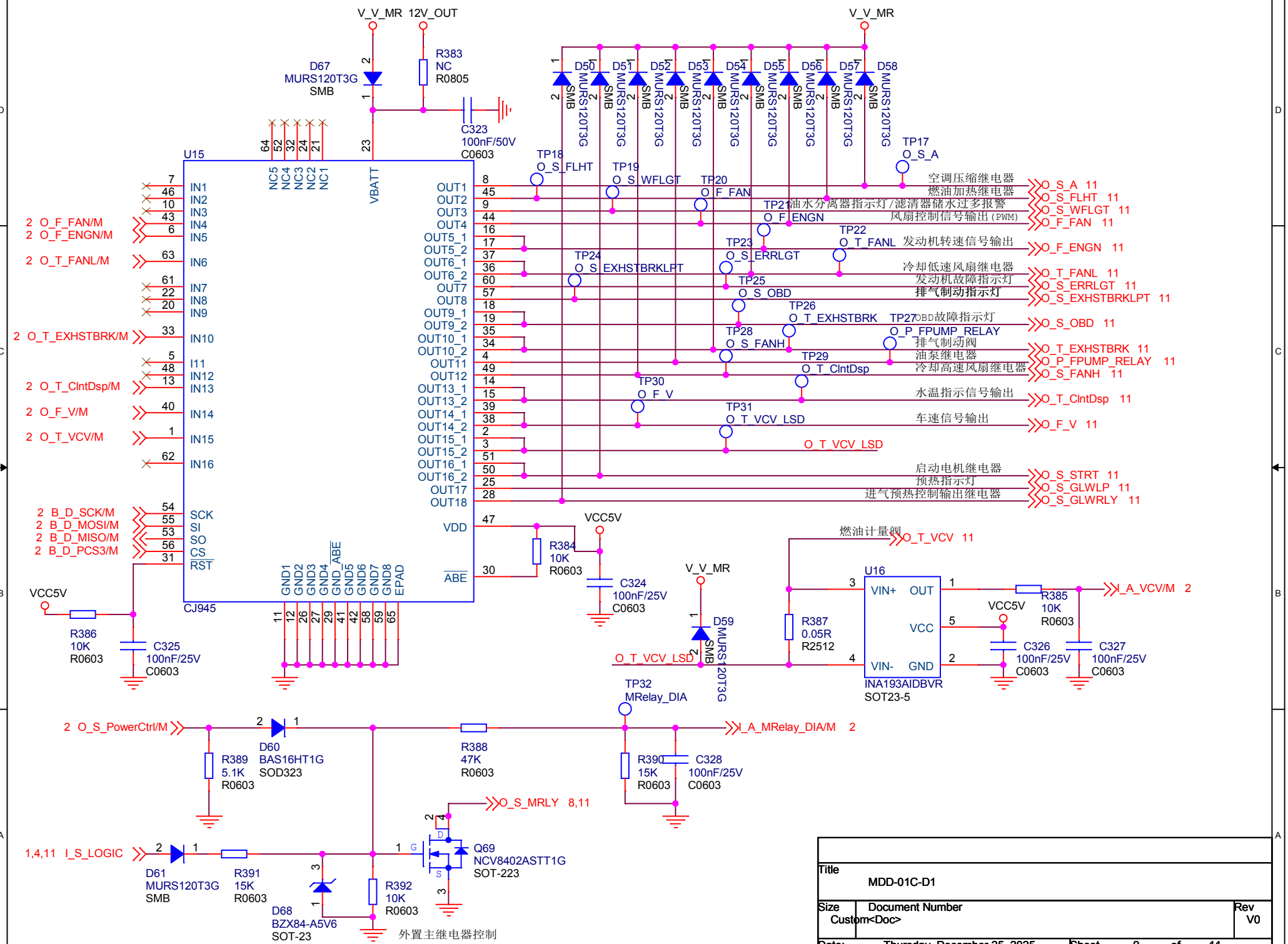
V_V_MR
12V_OUT
D67
MURS120T3G
SMB
R383
NC
R0805
C323
100nF/50V
C0603
U15
CJ945
VBATT
NC5 NC4 NC3 NC2 NC1
IN1 IN2 IN3 IN4 IN5 IN6 IN7 IN8 IN9 IN10 I11 IN12 IN13 IN14 IN15 IN16
OUT1 OUT2 OUT3 OUT4 OUT5_1 OUT5_2 OUT6_1 OUT6_2 OUT7 OUT8 OUT9_1 OUT9_2 OUT10_1 OUT10_2 OUT11 OUT12 OUT13_1 OUT13_2 OUT14_1 OUT14_2 OUT15_1 OUT15_2 OUT16_1 OUT16_2 OUT17 OUT18
VDD
ABE
SCK SI SO CS RST
GND1 GND2 GND3 GND4 GND_ABE GND5 GND6 GND7 GND8 EPAD
2 O_F_FAN/M
2 O_F_ENGN/M
2 O_T_FANL/M
2 O_T_EXHSTBRK/M
2 O_T_ClntDsp/M
2 O_F_V/M
2 O_T_VCV/M
2 B_D_SCK/M
2 B_D_MOSI/M
2 B_D_MISO/M
2 B_D_PCS3/M
VCC5V
R386
10K
R0603
C325
100nF/25V
C0603
R384
10K
R0603
C324
100nF/25V
C0603
D50 D51 D52 D53 D54 D55 D56 D57 D58
MURS120T3G
SMB
TP18 O_S_FLHT
TP19 O_S_WFLGT
TP20 O_F_FAN
TP21 O_F_ENGN
TP22 O_T_FANL
TP23 O_S_ERRLGT
TP24 O_S_EXHSTBRKLPT
TP25 O_S_OBD
TP26 O_T_EXHSTBRK
TP27 O_P_FPUMP_RELAY
TP28 O_S_FANH
TP29 O_T_ClntDsp
TP30 O_F_V
TP31 O_T_VCV_LSD
TP17 O_S_A
空调压缩继电器
燃油加热继电器
油水分离器指示灯/滤清器储水过多报警
风扇控制信号输出(PWM)
发动机转速信号输出
冷却低速风扇继电器
发动机故障指示灯
排气制动指示灯
OBD故障指示灯
排气制动阀
油泵继电器
冷却高速风扇继电器
水温指示信号输出
车速信号输出
启动电机继电器
预热指示灯
进气预热控制输出继电器
O_S_A 11
O_S_FLHT 11
O_S_WFLGT 11
O_F_FAN 11
O_F_ENGN 11
O_T_FANL 11
O_S_ERRLGT 11
O_S_EXHSTBRKLPT 11
O_S_OBD 11
O_T_EXHSTBRK 11
O_P_FPUMP_RELAY 11
O_S_FANH 11
O_T_ClntDsp 11
O_F_V 11
O_T_VCV_LSD
O_S_STRT 11
O_S_GLWLP 11
O_S_GLWRLY 11
燃油计量阀
O_T_VCV 11
U16
VIN+ OUT VCC VIN- GND
INA193AIDBVR
SOT23-5
R387
0.05R
R2512
D59
MURS120T3G
SMB
R385
10K
R0603
I_A_VCV/M 2
C326
100nF/25V
C0603
C327
100nF/25V
C0603
TP32
MRelay_DIA
2 O_S_PowerCtrl/M
D60
BAS16HT1G
SOD323
R389
5.1K
R0603
R388
47K
R0603
R390
15K
R0603
C328
100nF/25V
C0603
I_A_MRelay_DIA/M 2
O_S_MRLY 8,11
1,4,11 I_S_LOGIC
D61
MURS120T3G
SMB
R391
15K
R0603
D68
BZX84-A5V6
SOT-23
R392
10K
R0603
Q69
NCV8402ASTT1G
SOT-223
外置主继电器控制
Title
MDD-01C-D1
Size
Custom<Doc>
Document Number
Rev
V0
Date: Thursday, December 25, 2025
Sheet 9 of 11

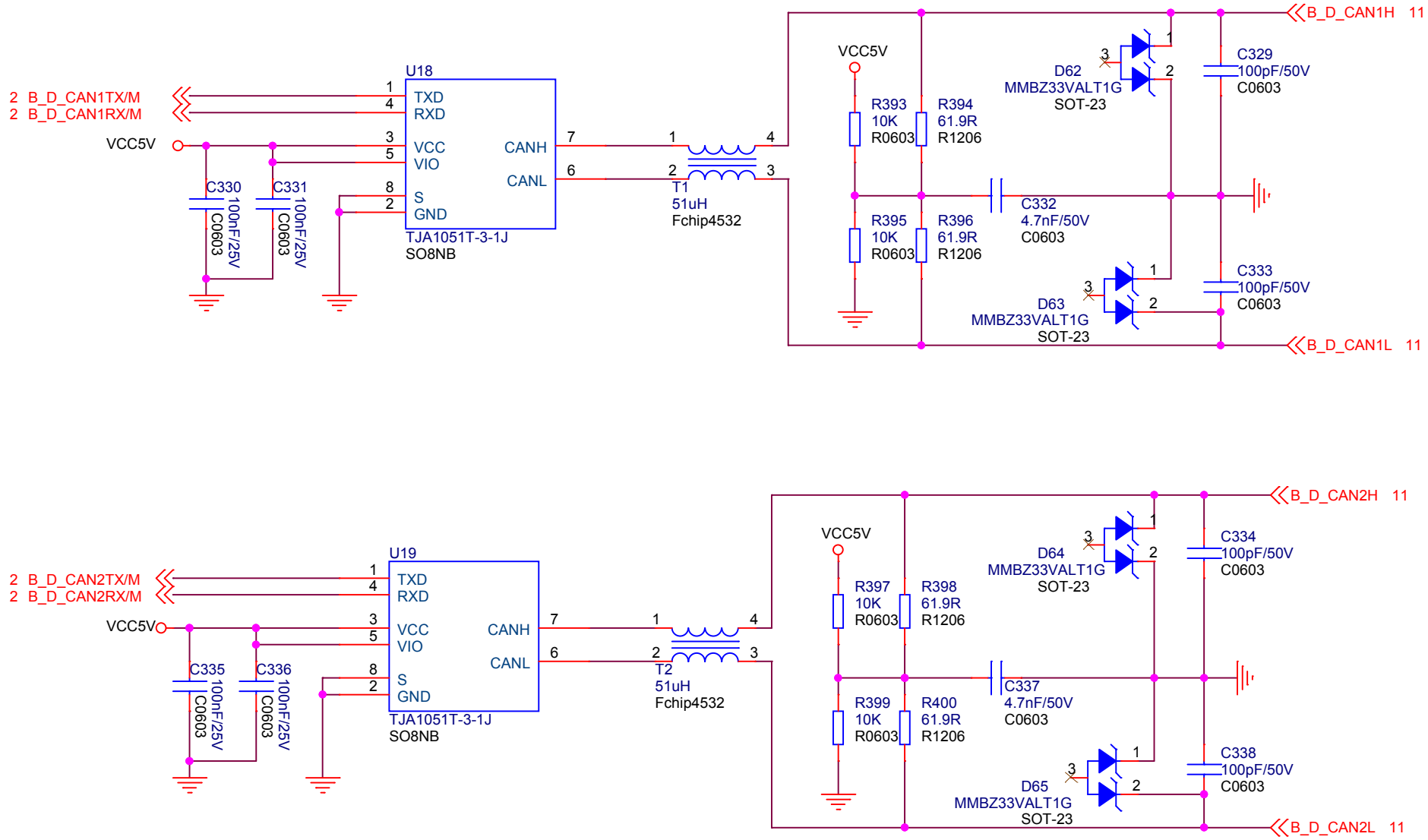

Title	MDD-01C-D1	
Size A	Document Number <Doc>	Rev V0
Date: Thursday, December 25, 2025	Sheet 10 of 11	

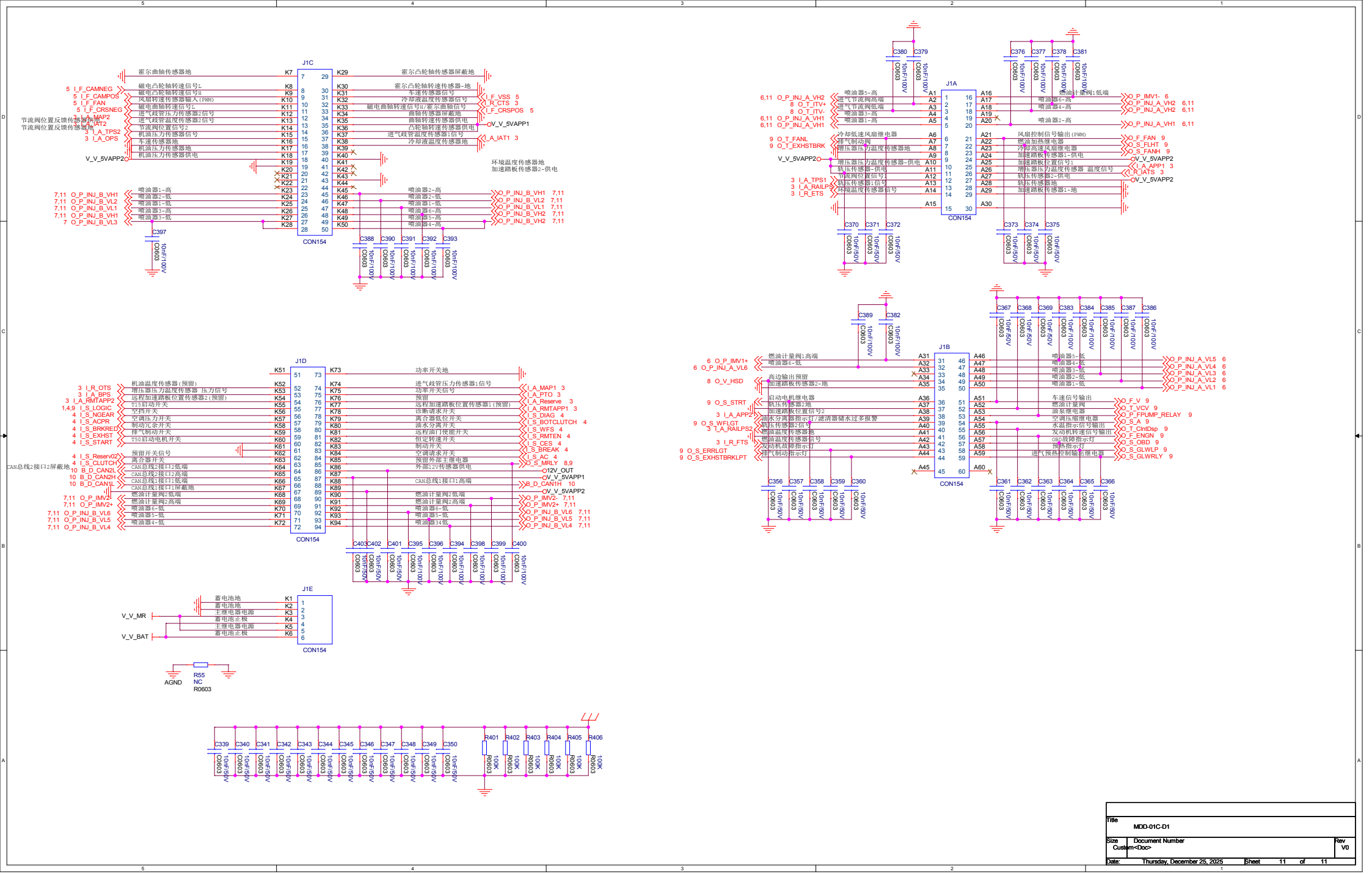

Title	MDD-01C-D1
Size	Custom
Document Number	<Doc>
Rev	V0
Date:	Thursday, December 25, 2025
Sheet	11 of 11