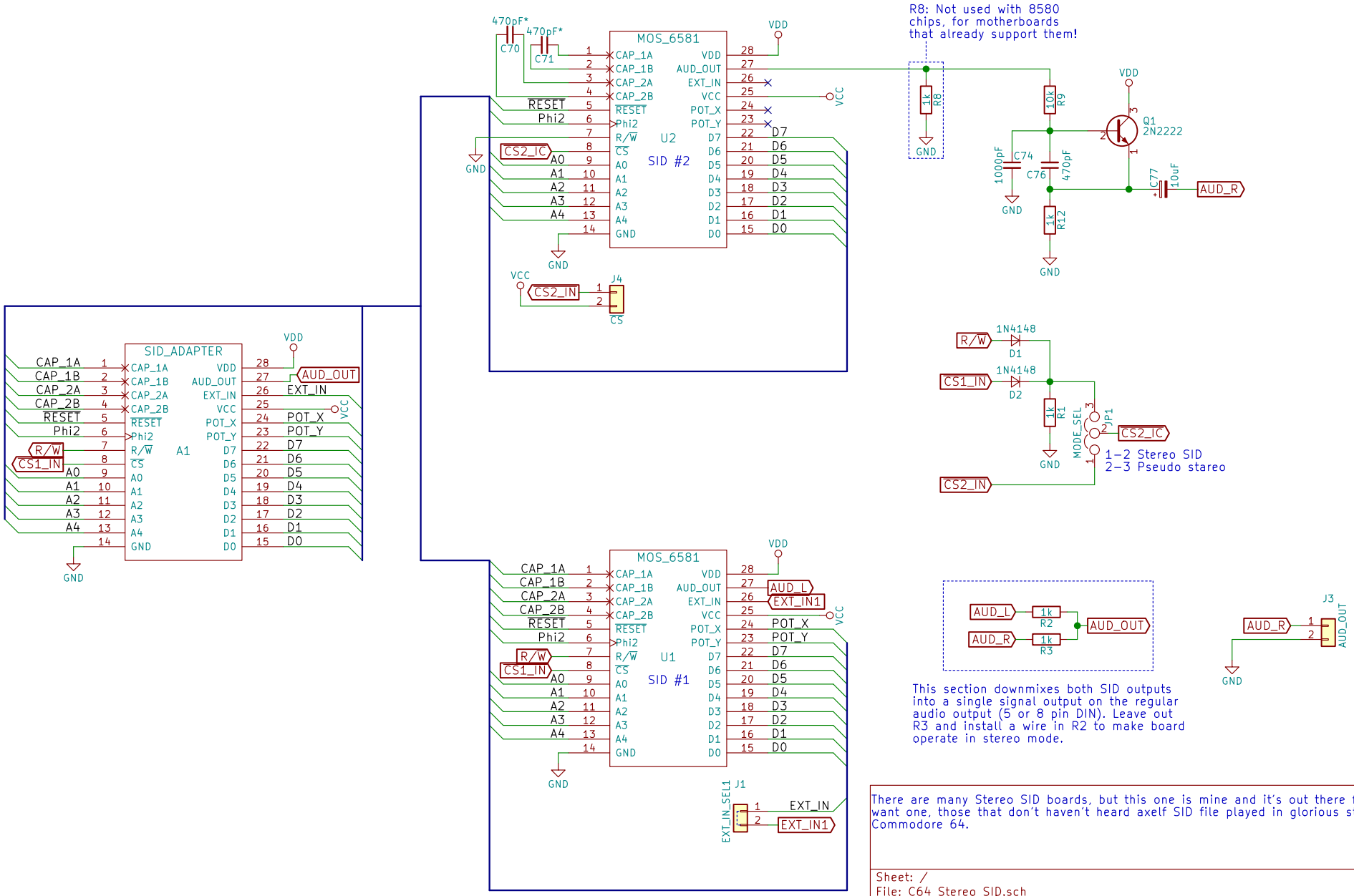


There are many Stereo SID boards, but this one is mine and it's out there for all who'd want one, those that don't haven't heard axelf SID file played in glorious stereo on a real Commodore 64.

Sheet: /
File: C64 Stereo SID.sch

**Title:** C64 Stereo SID

| | | |
|---|---|---|
| Size: A4 | Date: | **Rev:** C |
| KiCad E.D.A. kicad 4.0.7 | | Id: 1/1 |