Diagnosis, Fault-tolerant and Robust Control for a Torsional Control System

Mandatory assignment in DTU course 34746

Part A

Dimitrios Papageorgiou

February, 2026

Table 1: Revision history

version	date	description	changes
1.a	05.02.2026	new	all pages new

Assignment part A - 2026

Introduction

This exercise presents a model of the ECP M205a system. It is a three-mass system that comprises three identical disks, connected in parallel via a flexible low-damped shaft. The system is equipped with three incremental position encoders (one for each disk) and two actuators, i.e. a motor applying torques to the bottom disk and one more for the middle disk.

The control goal is to ensure that either of the disks tracks a specified motion profile. The system considered is sketched in Figure 1. The variables are explained in Table 2.

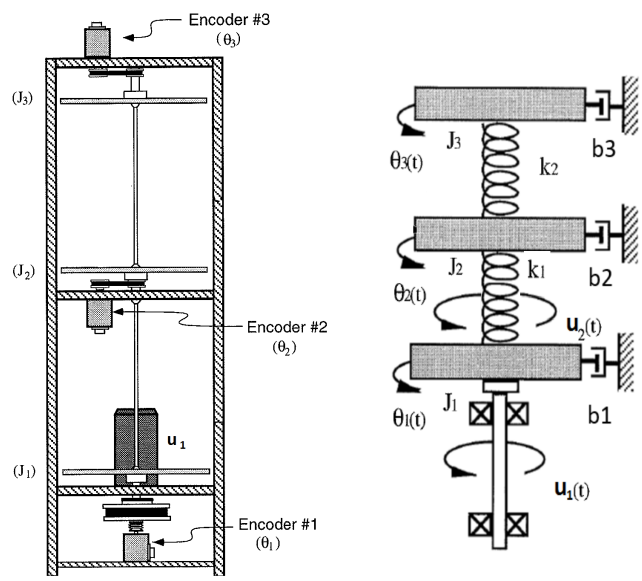

The normal behaviours of the systems are described by the following con-

Table 2: **List of variables**

variable	**unit**	**description**
θ_1	rad	angular position of bottom disk
ω_1	rads^{-1}	angular velocity of bottom disk
θ_2	rad	angular position of middle disk
ω_2	rads^{-1}	angular velocity of middle disk
θ_3	rad	angular position of top disk
ω_3	rads^{-1}	angular velocity of top disk
u_1	Nm	torque command for the bottom disk
u_2	Nm	torque command for the middle disk
y_1	rad	measured angular position of bottom disk
y_2	rad	measured angular position of middle disk
y_3	rad	measured angular position of top disk

straints:

$$
\begin{aligned}
c_1 &: 0 = \dot{\theta}_1 - \omega_1 \\
c_2 &: 0 = J_1\dot{\omega}_1 - u_1 + b_1\omega_1 + k_1\left(\theta_1 - \theta_2\right) + d \\
c_3 &: 0 = \dot{\theta}_2 - \omega_2 \\
c_4 &: 0 = J_2\dot{\omega}_2 - u_2 + b_2\omega_2 + k_1\left(\theta_2 - \theta_1\right) + k_2\left(\theta_2 - \theta_3\right) \\
c_5 &: 0 = \dot{\theta}_3 - \omega_3 \\
c_6 &: 0 = J_3\dot{\omega}_3 + b_3\omega_3 + k_2\left(\theta_3 - \theta_2\right) \\
d_7 &: 0 = \dot{\theta}_1 - \frac{d\theta_1}{dt} \\
d_8 &: 0 = \dot{\omega}_1 - \frac{d\omega_1}{dt} \\
d_9 &: 0 = \dot{\theta}_2 - \frac{d\theta_2}{dt} \\
d_{10} &: 0 = \dot{\omega}_2 - \frac{d\omega_2}{dt} \\
d_{11} &: 0 = \dot{\theta}_3 - \frac{d\theta_3}{dt} \\
d_{12} &: 0 = \dot{\omega}_3 - \frac{d\omega_3}{dt} \\
m_{13} &: 0 = y_1 - \theta_1 \\
m_{14} &: 0 = y_2 - \theta_2 \\
m_{15} &: 0 = y_3 - \theta_3
\end{aligned}
$$

where $d \triangleq T_C(\omega_1)$ is a function of the bottom disk angular velocity and represents the *unknown* Coulomb friction torque on that disk. The control input saturates at 2 Nm, i.e. $u_1 \in [-2, 2]$ Nm. The parameters in the forgoing con-

straints are listed in Table 3.

Table 3: **List of parameters**

symbol	**value**	unit	**description**
J_1	0.0025	kgm^2	Bottom disk moment of inertia
J_2	0.0018	kgm^2	Middle disk moment of inertia
J_3	0.0018	kgm^2	Top disk moment of inertia
k_1	2.7	Nmrad^{-1}	Stiffness of the bottom shaft
k_2	2.6	Nmrad^{-1}	Stiffness of the middle shaft
b_1	0.0029	Nmsrad^{-1}	Damping/friction on the bottom disk
b_2	0.0002	Nmsrad^{-1}	Damping/friction on the middle disk
b_3	0.00015	Nmsrad^{-1}	Damping/friction on the top disk

A Simulink model and a parameter initialisation file have been uploaded to DTU Learn in the *File share/Matlab and Simulink files/Mandatory Assignment Part A* folder for your convenience.

Question 1

Make a structural analysis:

1. Determine a complete matching on the unknown variables.
2. Find the parity relations in symbolic form.
3. Reformulate the parity relations to an analytic form, as functions only of known variables and the system parameters.

Question 2

1. Design a set of proper residual generators, i.e. residual generators that are stable and are causal.
2. Discretise your residuals with sampling period $T_s = 4$ ms.
3. Implement your residual generators using a Simulink model of the system and demonstrate by simulation (in open loop) that your residuals are insensitive to changes of control inputs.

Question 3 (Experimental work)

A single sensor additive fault afflicted the measurements.

1. Test the implemented residual generators on data recorded from the ECP M502a torsional system. Demonstrate their fault-detection properties.

2. Which of the three sensors is afflicted by the fault? Justify your answer.

3. Are the residuals insensitive to input changes? Comment on the results.

Hint: In order to load the recorded inputs and outputs in Simulink, you can set them in a timeseries structure (Matlab command `timeseries()`) and use the "From Workspace" block in Simulunk.

Question 4

Faults are possible on any of the sensors or at the actuator.

1. Model these as additive faults and write the system in the standard form

$$\dot{\boldsymbol{x}} = \boldsymbol{A}\boldsymbol{x} + \boldsymbol{B}\boldsymbol{u} + \boldsymbol{E}_{\boldsymbol{x}} d + \boldsymbol{F}_{\boldsymbol{x}} \boldsymbol{f}$$
$$\boldsymbol{y} = \boldsymbol{C}\boldsymbol{x} + \boldsymbol{D}\boldsymbol{u} + \boldsymbol{E}_{\boldsymbol{y}} d + \boldsymbol{F}_{\boldsymbol{y}} \boldsymbol{f}$$

   where the matrices need be determined and the vector $\boldsymbol{f}$ contains all actuator and sensor faults.

2. Determine the transfer function $H_{rf}(s)$ from faults to residuals in your LTI design.

3. Investigate strong and weak detectability of the faults.

4. What would change in terms of fault detectability if the Coulomb friction function $T_C(\omega_1)$ were known?

Hints: For this task it is useful to find a basis for the left nullspace by using the Matlab symbolic toolbox in defining the various transfer functions (e.g. `syms s; G = 1/(s + 1)`). You may find the following functions useful:

- `simplify` - simplifies symbolic expression,
- `expand` - expands symbolic expression,
- `numden` - extracts enumerator and denominator of symbolic fraction,
- `sym2poly` - converts symbolic polynomial to numeric,
- `minreal` - gives a minimal realization of a transfer function,
- `zpk` - expresses a transfer function as a zero-pole-gain product.

Question 5

The sensors have measurement noise. The noise of individual sensors is uncorrelated, i.e. $\boldsymbol{y} = \boldsymbol{C}\boldsymbol{x} + \boldsymbol{w}$ with

$$\boldsymbol{w} \sim \mathcal{N}\left(\begin{bmatrix}0\\0\\0\end{bmatrix}, \begin{bmatrix}\sigma_1^2 & 0 & 0\\ 0 & \sigma_2^2 & 0\\ 0 & 0 & \sigma_3^2\end{bmatrix}\right) \tag{1}$$

with $\sigma_1 = \sigma_2 = \sigma_3 = 0.0093$ rad.

Choose a residual generator that is sensitive to faults on y_2.

1. Calculate the variance at the output of the residual.
2. Design a GLR detector that can detect a sudden offset fault of unknown magnitude in sensor y_2. Tune the GLR by determining the threshold h and the window size M, such that if the fault on y_2 has magnitude $f_2 = -0.025$ rad, then the false alarm probability will be $P_F = 0.0001$ or lower and the probability of missed detection $P_M = 0.01$ or lower.
3. Implement the designed GLR in Simulink and validate the design in simulation.

Question 6 (Experimental work)

Test your GLR detector on data recorded from the ECP M502a torsional system. Connect the GLR block to the residual generator from Question 5 and demonstrate its robustness properties with respect to false alarms. Comment on the results.

Hint: You can use the "Matlab function" block in Simulunk from the "user-defined functions" library.

Question 7

A discrete linear quadratic regulator (DLQR) is to be designed to ensure that the top disk tracks a given step change θ_{ref} in its position. The resulting closed loop system should have the following form

$$\boldsymbol{x}(k+1) = (\boldsymbol{F} - \boldsymbol{G}\boldsymbol{K_c})\, x(k) + \boldsymbol{G}\boldsymbol{K_c}\boldsymbol{C_{ref}}\theta_{ref}(k) + \boldsymbol{E_x} d(k) \tag{2}$$

$$\boldsymbol{y}(k) = \boldsymbol{C} x(k) + \boldsymbol{E_y} d(k) \tag{3}$$

with $\boldsymbol{F} \in \mathbb{R}^{6\times 6}, \boldsymbol{G} \in \mathbb{R}^{6\times 2}$ being the discretised system matrices and $\boldsymbol{C_{ref}}$ is a scaling matrix for the scalar reference signal.

1. Discretise the system with sampling period $T_s = 4$ ms.

2. Show (analytically prove) that the reference scaling matrix $\boldsymbol{C_{ref}}$ is given by

$$\boldsymbol{C_{ref}} = \left(\boldsymbol{C_3}(\boldsymbol{I} - \boldsymbol{F} + \boldsymbol{G}\boldsymbol{K_c})^{-1}\boldsymbol{G}\boldsymbol{K_c}\right)^{+}$$
$$\boldsymbol{C_3} = \begin{bmatrix} 0 & 0 & 0 & 0 & 1 & 0 \end{bmatrix},$$

where $\boldsymbol{X}^{+}$ denotes the pseudoinverse of a matrix $\boldsymbol{X}$.

3. Design a full state-feedback DLQR and choose the weighting matrices as following:

$$\boldsymbol{Q_c} = \begin{bmatrix} 2 & 0 & 0 & 0 & 0 & 0 \\ 0 & 0 & 0 & 0 & 0 & 0 \\ 0 & 0 & 2 & 0 & 0 & 0 \\ 0 & 0 & 0 & 0 & 0 & 0 \\ 0 & 0 & 0 & 0 & 2.5 & 0 \\ 0 & 0 & 0 & 0 & 0 & 0.0024 \end{bmatrix}, \quad \boldsymbol{R_c} = \begin{bmatrix} 10 & 0 \\ 0 & 10 \end{bmatrix}.$$

4. Implement the controller in Simulink and simulate the closed-loop system for a square wave reference of amplitude $|\theta_{ref}(k)| = \frac{\pi}{2}$ rad (from 0 to $\frac{\pi}{2}$), period 10 s and width 5 s.

Assumption: A Kalman filter with friction estimation is provided to you such that all the states are considered available for feedback.

Question 8

An additive fault f_u suddenly corrupts the second actuator at $t = 25$ s, such that it can no longer be used (the second column of $\boldsymbol{B}$ includes only zeros). Assuming that the fault is detected after 3.75 s,

1. Can there be perfect static reconfiguration? Justify your answer.

2. Simulate the effect of the fault and design a virtual actuator in discrete time to recover from it.

3. Implement the virtual actuator and add it to the existing Simulink file that is provided to you. Simulate the closed-loop system for the same reference and comment on the tracking performance and the outputs of the residuals.

Bonus experimental work (optional extra points)

Design an integral virtual sensor to recover from the additive sensor fault of Question 5. Assume that once the fault is detected, the sensor is discarded (C loses a row). Implement the virtual sensor in Simulink and test it on data

recorded from the ECP M502a torsional system. Use the decision function from the GLR to enable the virtual sensor whenever a fault in y_2 is detected. Comment on the quality of the reconstructed measurements in the presence of a fault on y_2.

Practical notes

- The deadline for the report is **Wednesday March 18, 2026, at 23:55 hours.**
- Please note that max. 20 pages are allowed for part A, excluding front matter. Any pages in excess of 20 (excluding front matter) will be discarded.
- Layout must be reasonable: A4 paper, $20mm$ margins and font size $11pt$.
- The report need be delivered in electronic form, **as a .pdf file**, via the DTULearn assignment system. Bundle your .pdf report and your code in a .zip file named "Group_ZZ_Sxxxxxx_Syyyyyy.zip". Only a single is accepted.
- Group-work is encouraged (max 2 persons in one group).
- Please do **write your name(s) and student number(s) at the front page and as running heading on each page of your report**. In addition, do not forget page numbers.