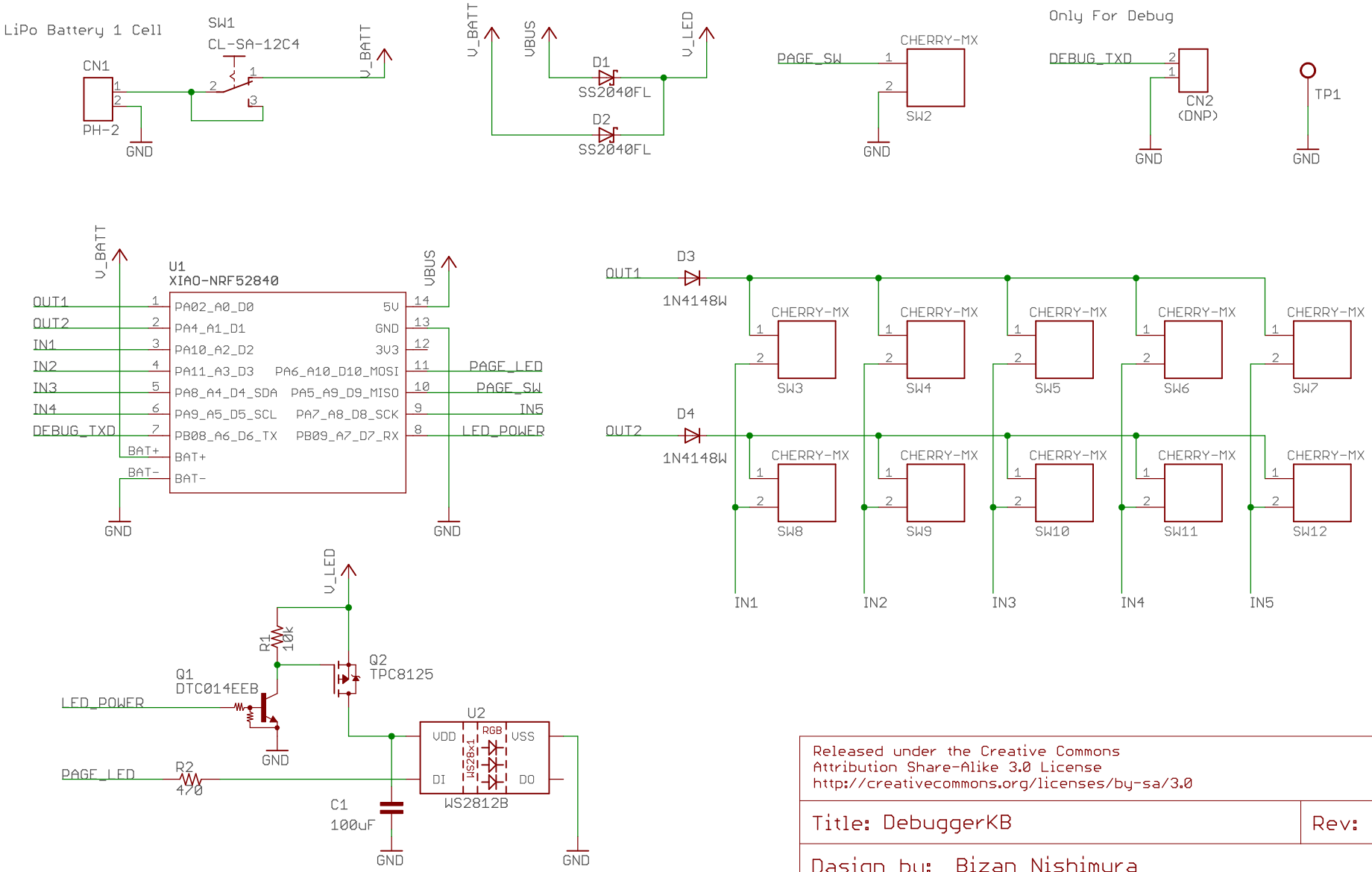

Released under the Creative Commons
Attribution Share-Alike 3.0 License
http://creativecommons.org/licenses/by-sa/3.0

Title: DebuggerKB	Rev: 1
Dasign by: Bizan Nishimura	
Date: 2023/01/27 13:55	Sheet: 1/1