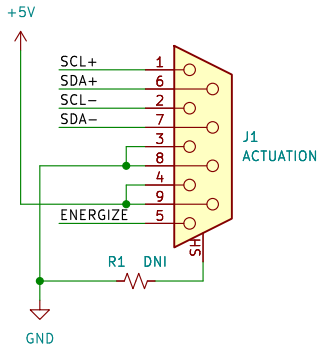

Only ground DSUB on C&C side

600Ω and 120Ω as recommended by the datasheet for CAT5 (100Ω equivalent termination). DSUB cable not controlled for impedance

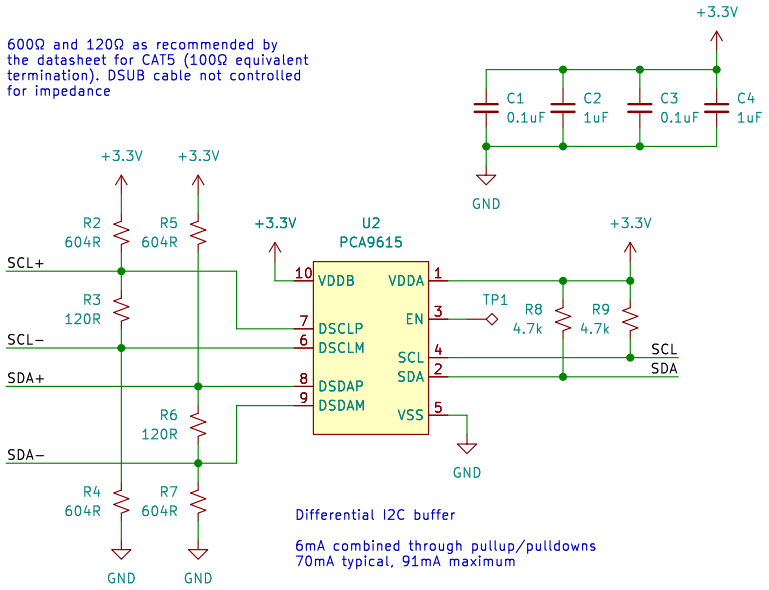

Differential I2C buffer

6mA combined through pullup/pulldowns
70mA typical, 91mA maximum

ESD protection TVS diodes

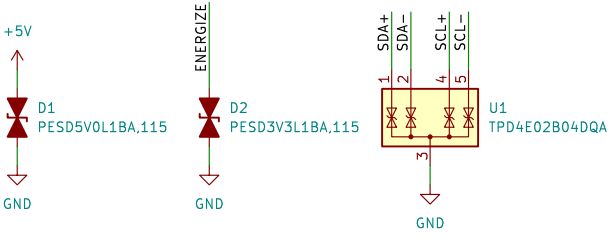

System States
- PWR IN connected to 20–28V (powered)
- De-safing key attached (de-safed)
- 12V applied to arming relay coil (armed)
- C&C brings ENERGIZE line high (energized)
- C&C commanding actuation (operative)

I2C addresses:
Actuator CH 1–8: 0x20
Actuator CH 9–16: 0x21
Feedback GPIO: 0x22
Current sense ADC: 0x49

Subsheets

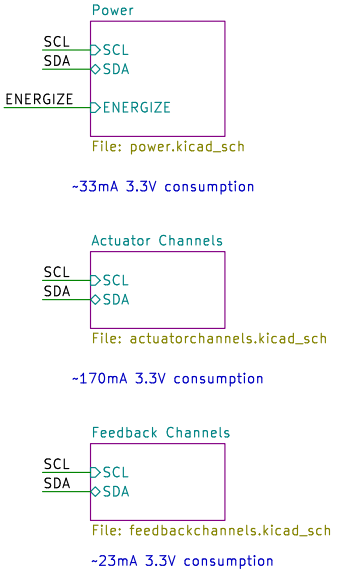

Interfacing (dI2C with C&C)

Sheet: /		
File: actuation.kicad_sch		
Title:		
Size: User	Date:	**Rev:**
KiCad E.D.A. kicad 7.0.7		Id: 1/4

SSRs rated for 2A output, trigger with 5–25mA
Forward voltage of internal LED is 1.1–1.4V
~7.5mA nominal current draw per channel
8 channels: 16A output, 60mA input
16 channels: 32A output, 120mA input

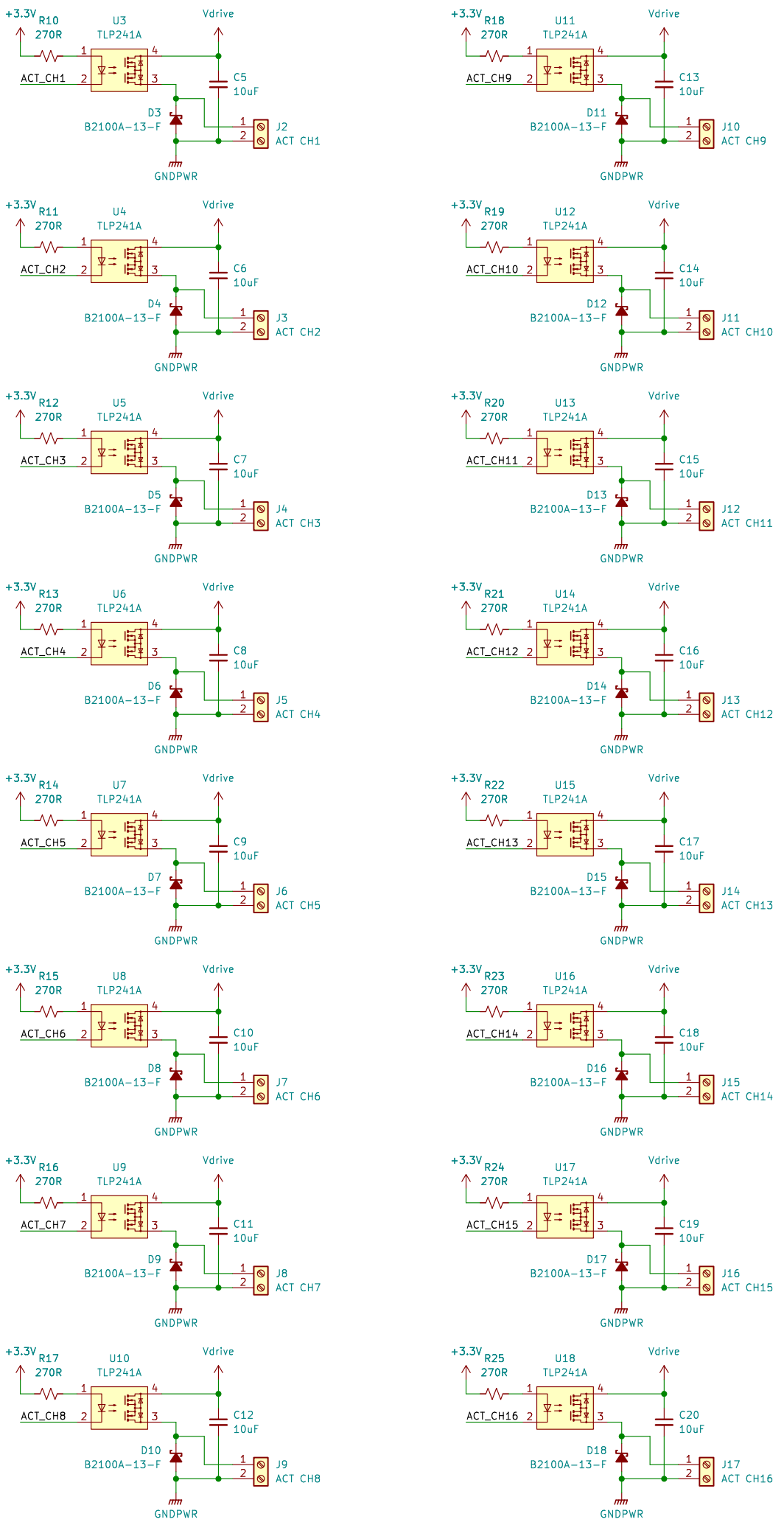

Actuation SSRs

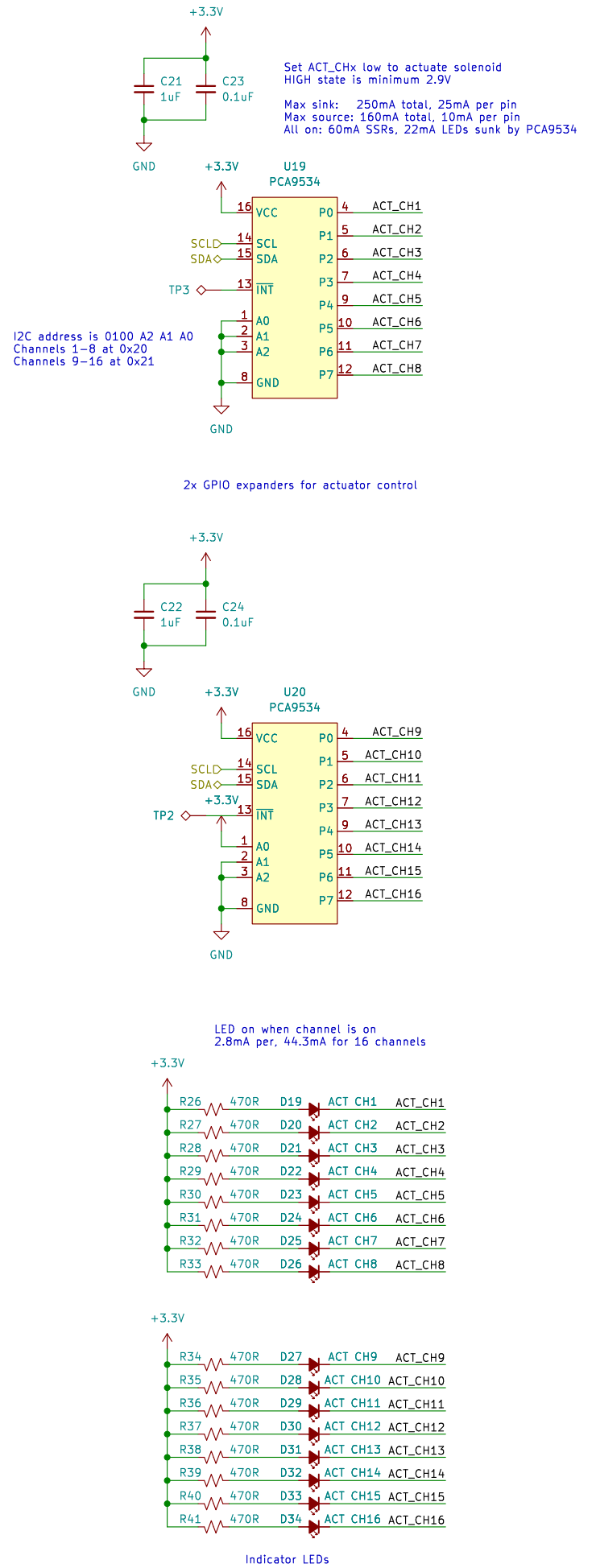

Actuation Logic

Sheet: /Actuator Channels/
File: actuatorchannels.kicad_sch

Title:

Size: User	Date:	Rev:
KiCad E.D.A. kicad 7.0.7		Id: 2/4

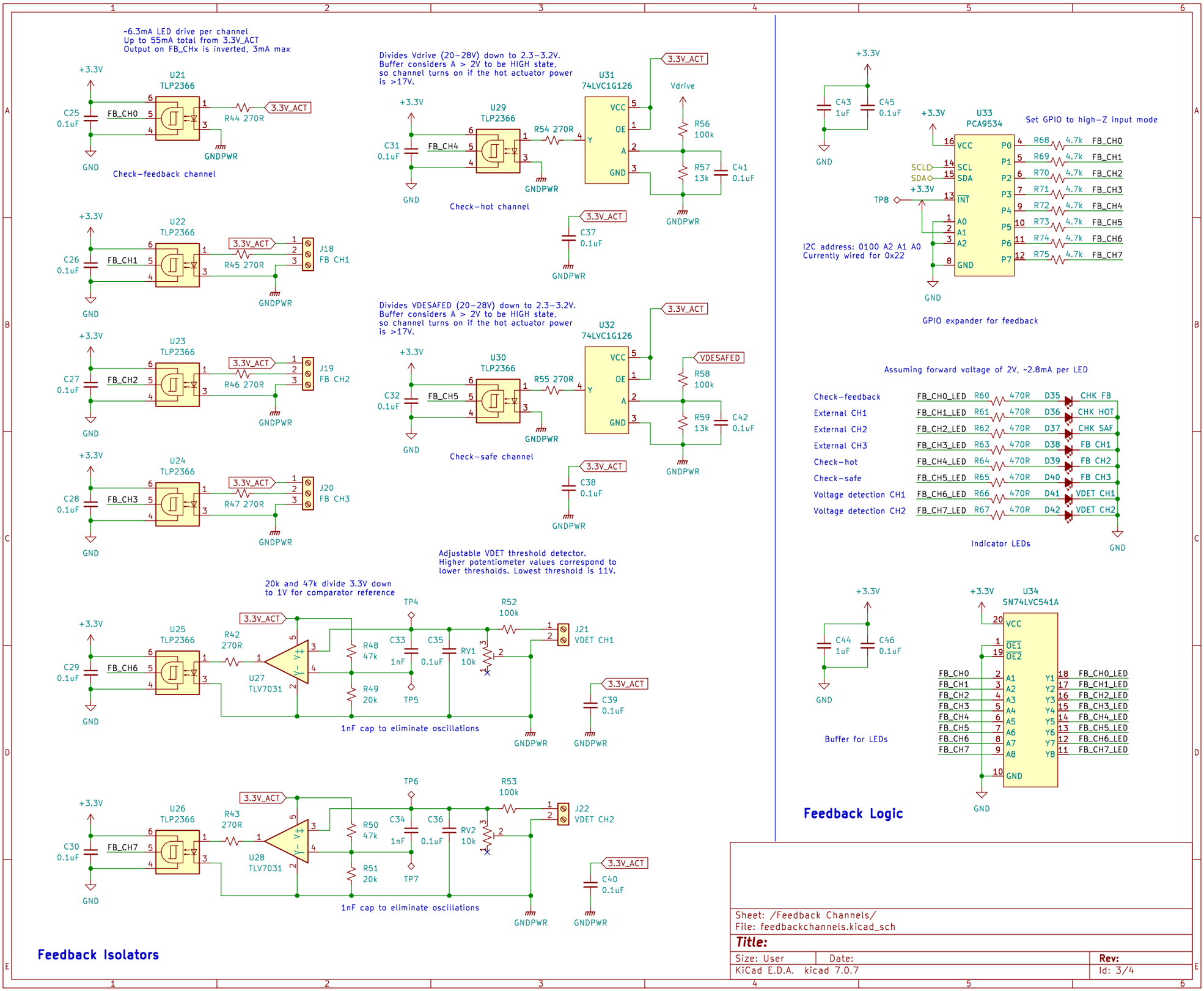

Sheet: /Feedback Channels/
File: feedbackchannels.kicad_sch

Title:

Size: User	Date:	Rev:
KiCad E.D.A. kicad 7.0.7		Id: 3/4

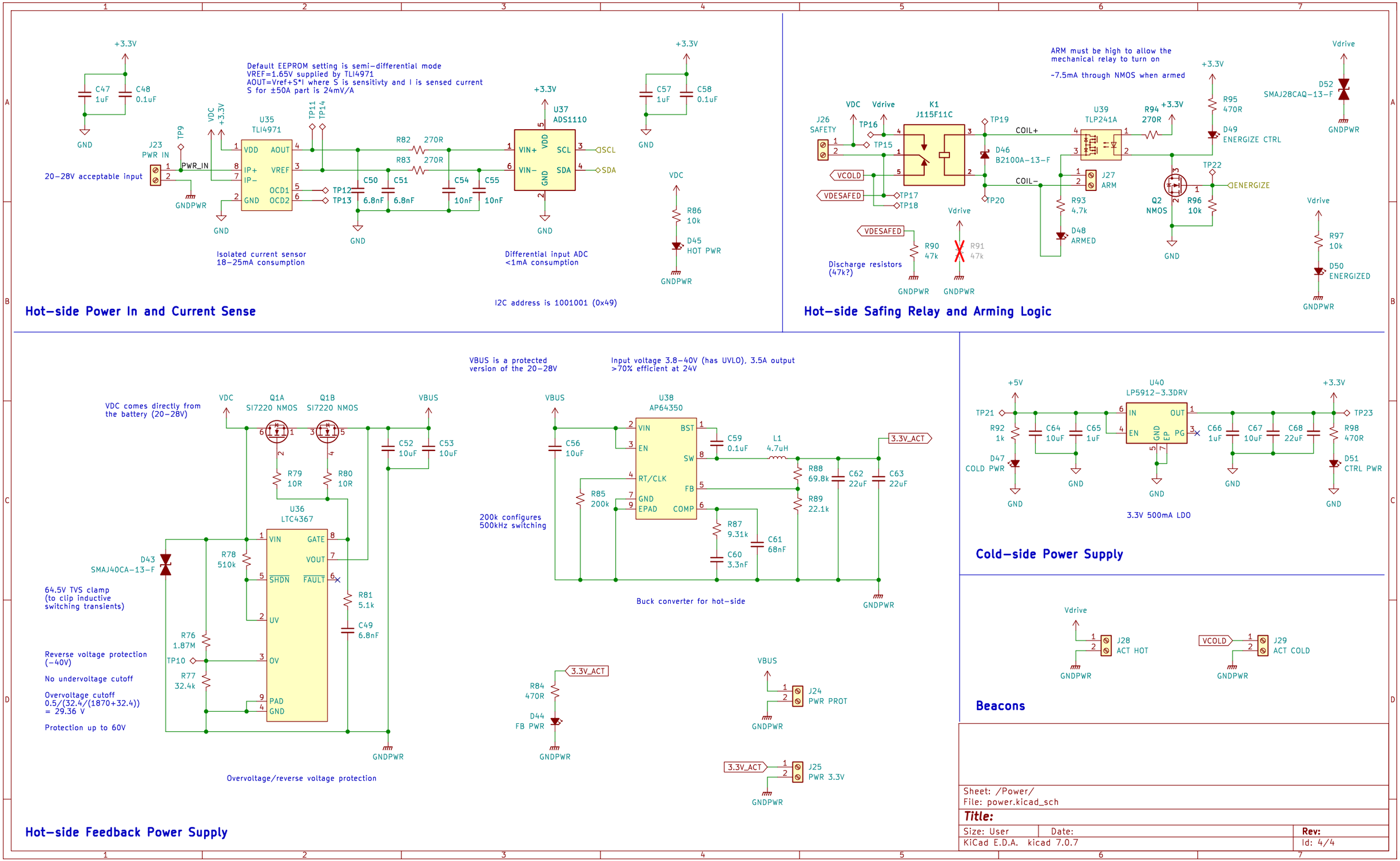

Sheet: /Power/
File: power.kicad_sch

Title:

Size: User	Date:	Rev:
KiCad E.D.A. kicad 7.0.7		Id: 4/4