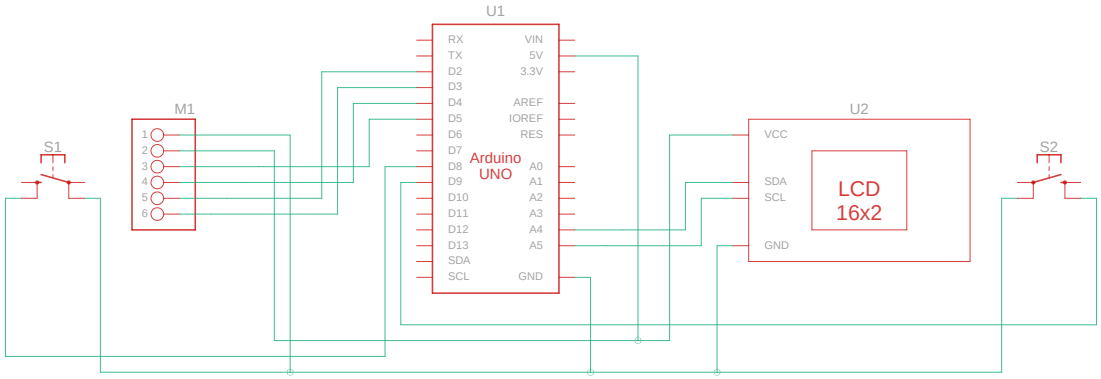

Made with Tinkercad®

Title:

Date: 21.01.2025, 21:52:59

Sheet: 1/1