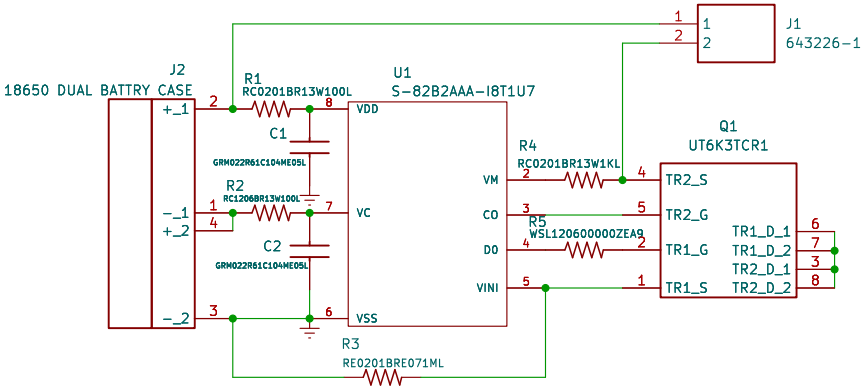

Dual-Cell Ion Battery Controler

Liron Avraham

Sheet: /
File: 2 cell battery PCB.kicad_sch

Title: Dual-Cell Ion Battery Controler

Size: A4	Date: 22/12/2023	**Rev:** 1
KiCad E.D.A. kicad 7.0.5		Id: 1/1