Small MAVRIC autopilot

refer to github.com/lis-epfl/MAVRIC for documentation

Page 2: STM32F4 pin map
Page3: Voltage regulator
Page4: sensors

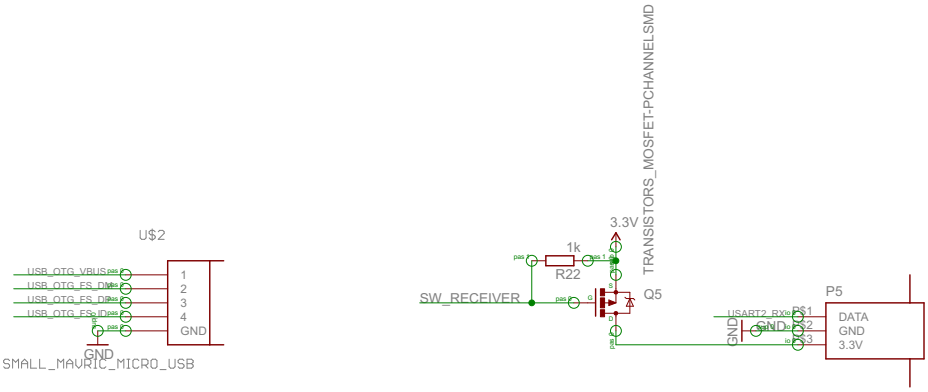

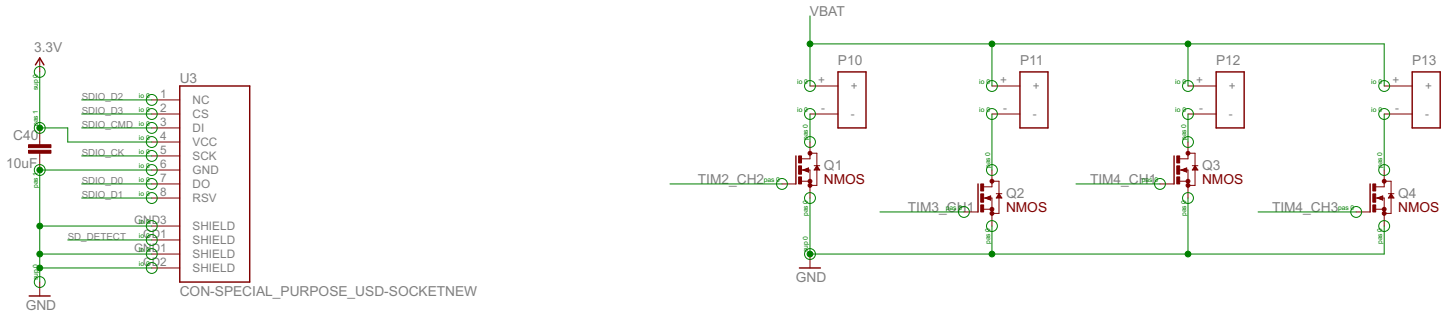

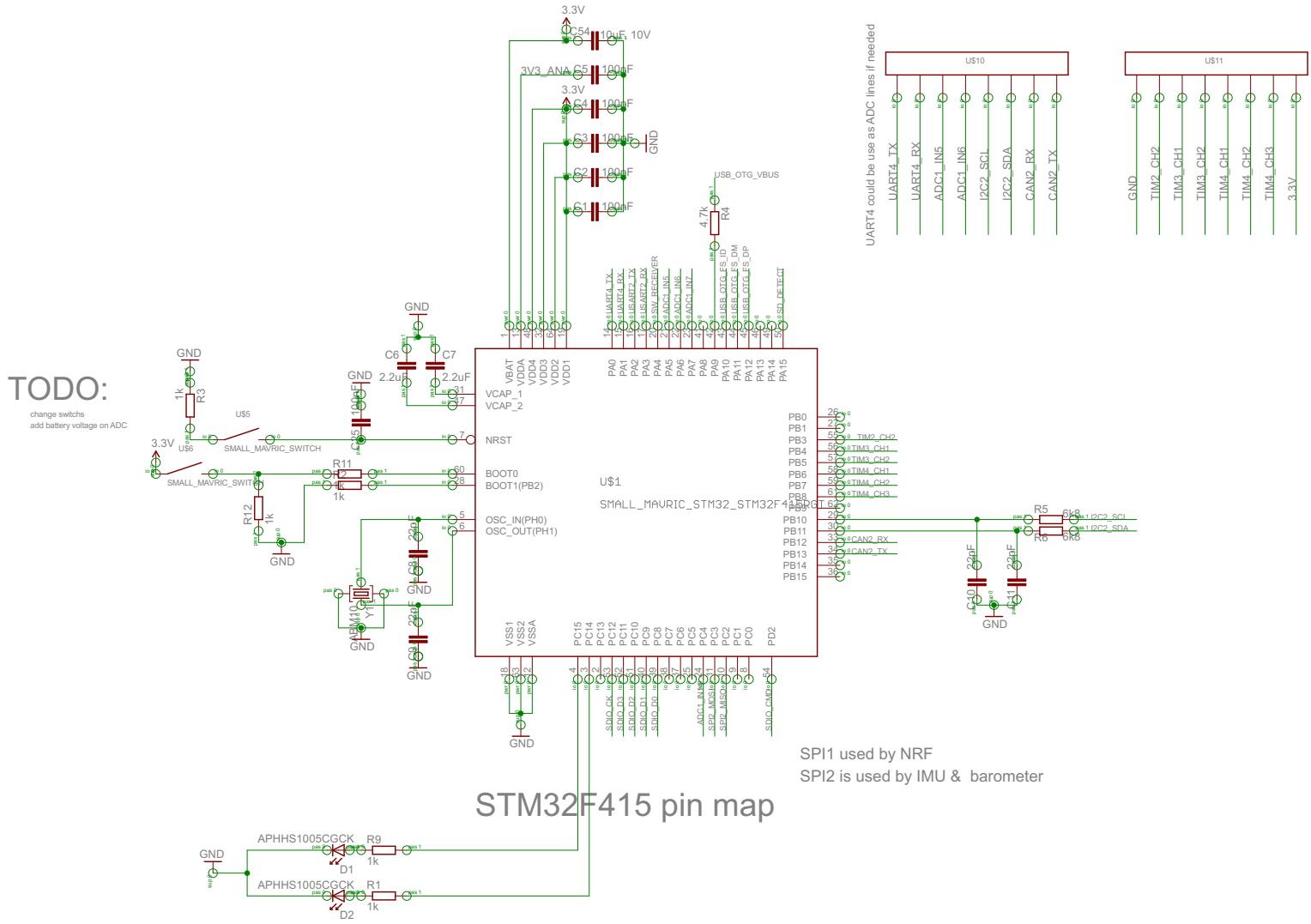
TODO:
change switchs
add battery voltage on ADC
STM32F415 pin map
SPI1 used by NRF
SPI2 is used by IMU & barometer
UART4 could be use as ADC lines if needed
U$10
U$11
U$1
SMALL_MAVRIC_STM32_STM32F4ARGT
SMALL_MAVRIC_SWITCH
APHHS1005CGCK
3.3V
GND
3V3_ANA
USB_OTG_VBUS
UART4_TX
UART4_RX
ADC1_IN5
ADC1_IN6
I2C2_SCL
I2C2_SDA
CAN2_RX
CAN2_TX
TIM2_CH2
TIM3_CH1
TIM3_CH2
TIM4_CH1
TIM4_CH2
TIM4_CH3

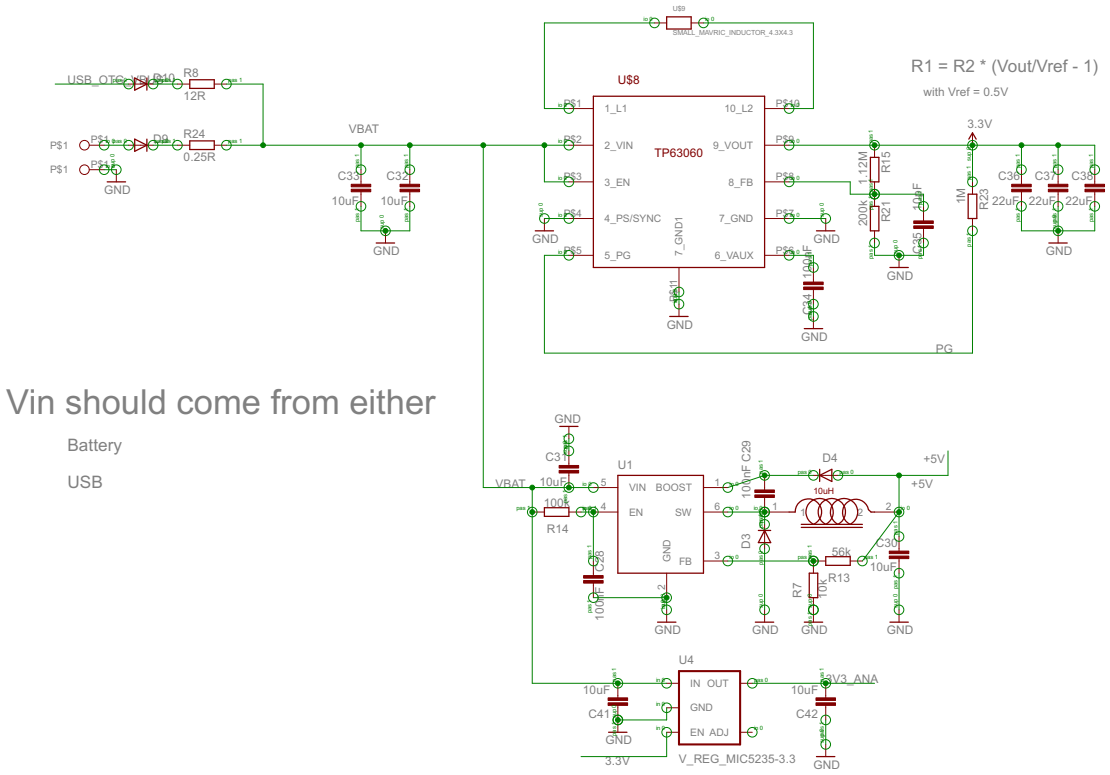

Buch/Boost converter

From "2.7V - 12V" to 3.3V

Vin should come from either

Battery

USB

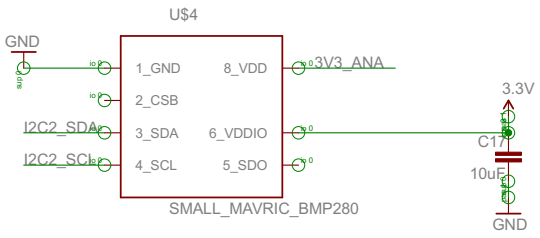
U$4
GND
1_GND
8_VDD
3V3_ANA
2_CSB
I2C2_SDA
3_SDA
6_VDDIO
I2C2_SCL
4_SCL
5_SDO
SMALL_MAVRIC_BMP280
3.3V
C17
10uF
GND

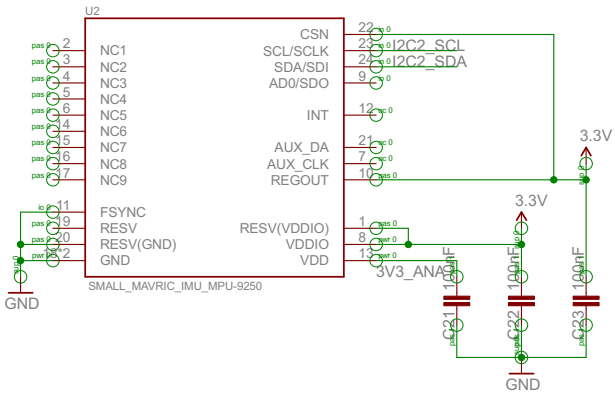
U2
NC1
NC2
NC3
NC4
NC5
NC6
NC7
NC8
NC9
FSYNC
RESV
RESV(GND)
GND
CSN
SCL/SCLK
SDA/SDI
AD0/SDO
INT
AUX_DA
AUX_CLK
REGOUT
RESV(VDDIO)
VDDIO
VDD
I2C2_SCL
I2C2_SDA
3V3_ANA
SMALL_MAVRIC_IMU_MPU-9250
3.3V
3.3V
C21
C22
C23
GND
GND