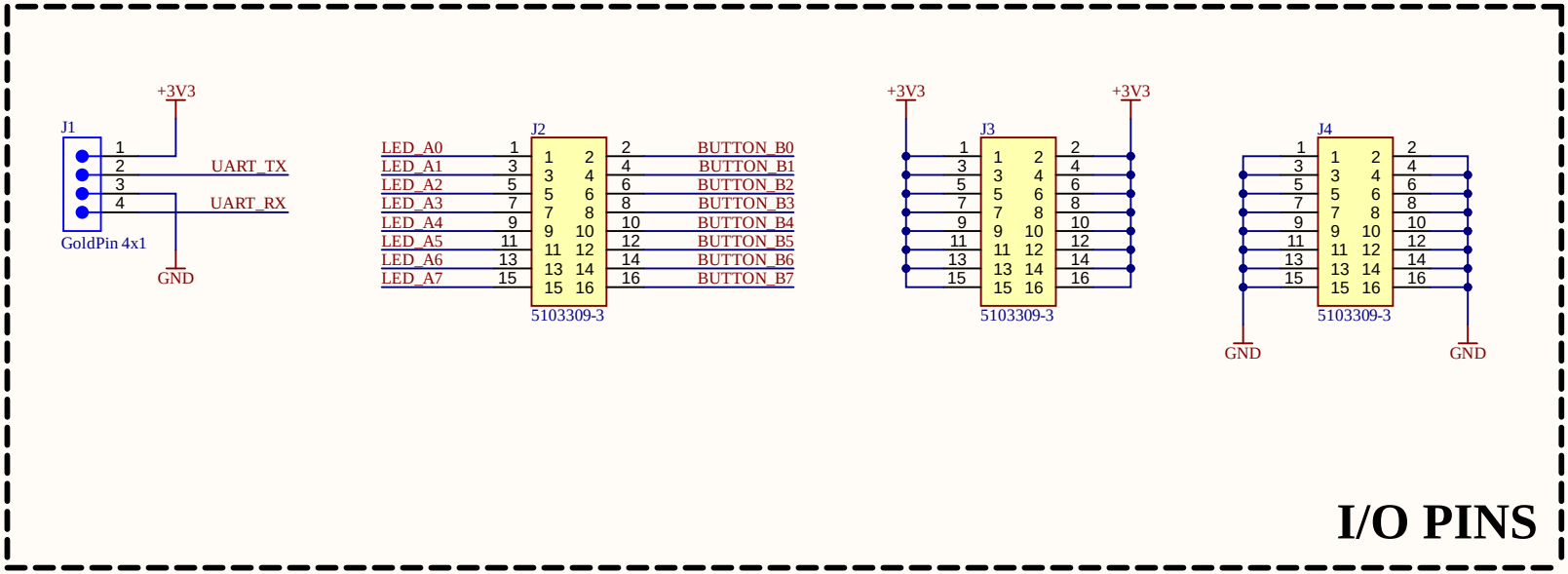
I/O PINS
J1
GoldPin 4x1
+3V3
GND
UART_TX
UART_RX
J2
5103309-3
LED_A0
LED_A1
LED_A2
LED_A3
LED_A4
LED_A5
LED_A6
LED_A7
BUTTON_B0
BUTTON_B1
BUTTON_B2
BUTTON_B3
BUTTON_B4
BUTTON_B5
BUTTON_B6
BUTTON_B7
J3
J4

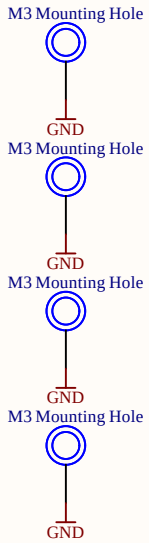
M3 Mounting Hole
GND

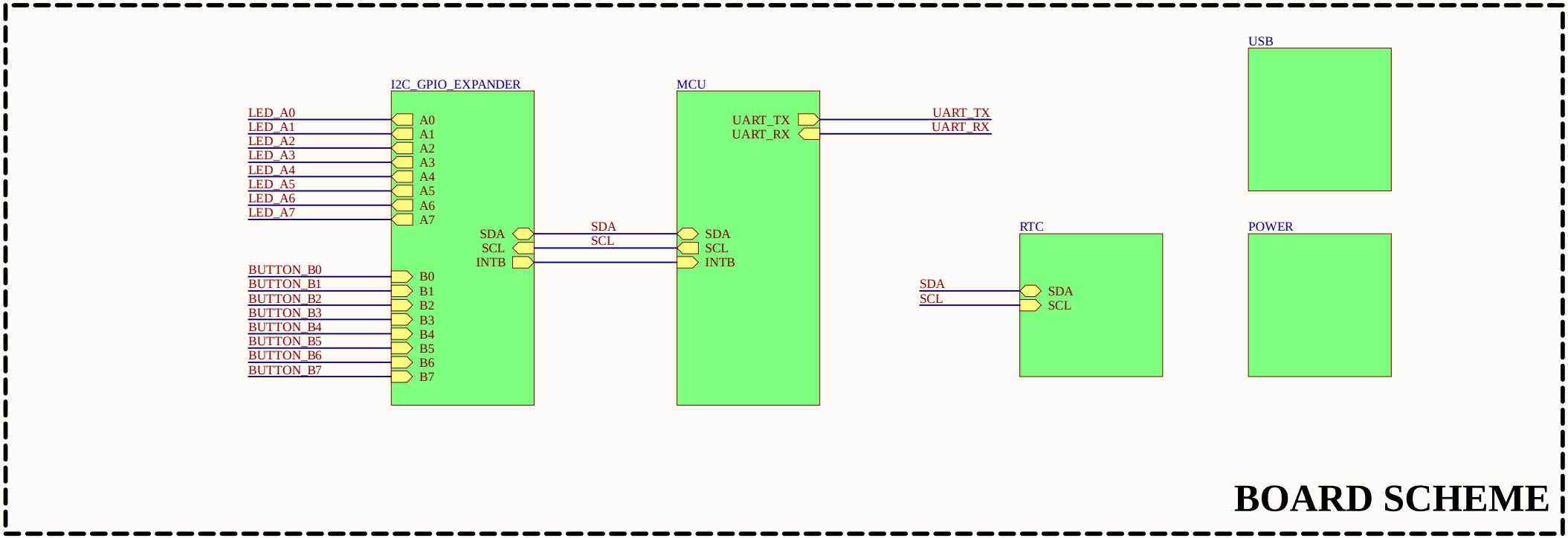
BOARD SCHEME
I2C_GPIO_EXPANDER
MCU
USB
RTC
POWER
LED_A0
LED_A1
LED_A2
LED_A3
LED_A4
LED_A5
LED_A6
LED_A7
A0
A1
A2
A3
A4
A5
A6
A7
SDA
SCL
INTB
BUTTON_B0
BUTTON_B1
BUTTON_B2
BUTTON_B3
BUTTON_B4
BUTTON_B5
BUTTON_B6
BUTTON_B7
B0
B1
B2
B3
B4
B5
B6
B7
UART_TX
UART_RX

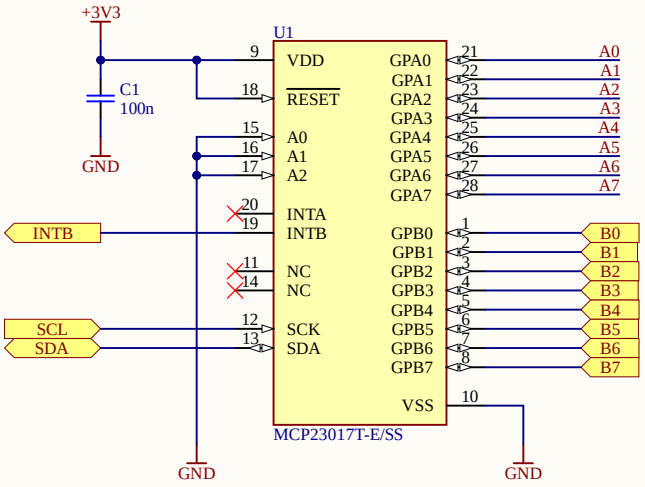

I2C GPIO EXPANDER

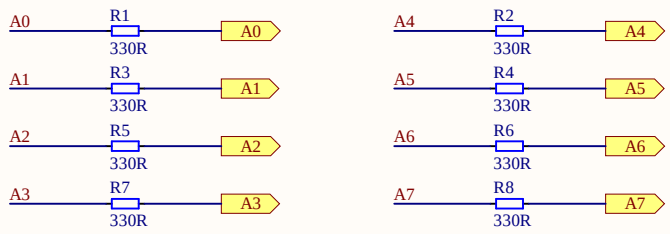

LED RESISTORS

Title		
Size A4	Number	Revision
Date: 4.04.2026		Sheet of
File: C:_Projects\..\I2C_GPIO_EXPANDER.SchDoc		Drawn By:

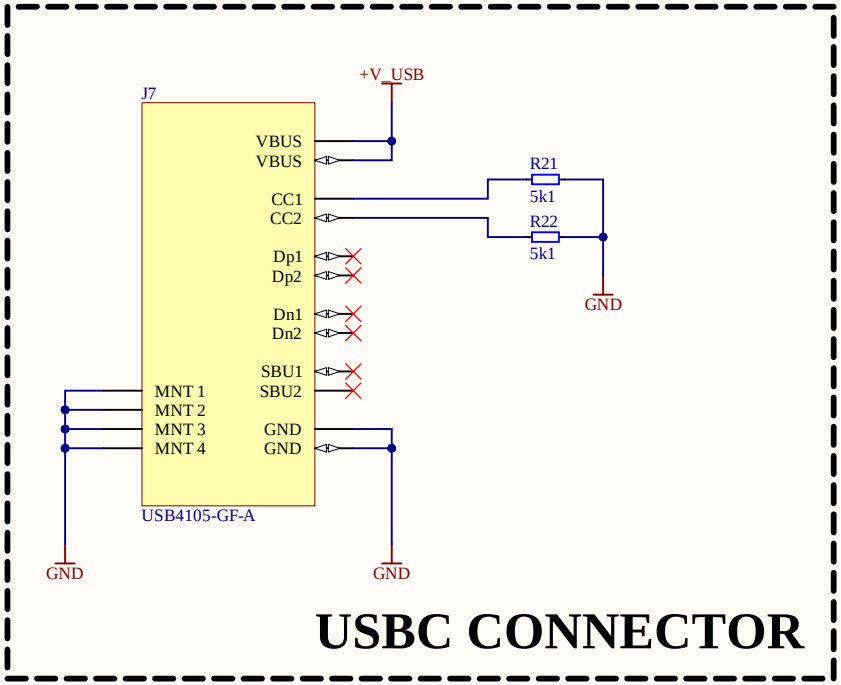

Title		
Size A4	Number	Revision
Date: 4.04.2026		Sheet of
File: C:_Projects\..\USB.SchDoc		Drawn By:

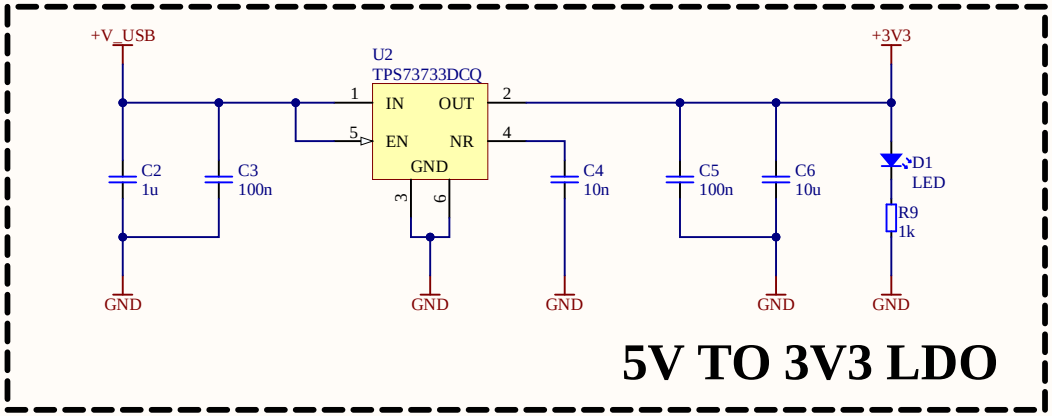
+V_USB
U2
TPS73733DCQ
IN
OUT
EN
NR
GND
1
2
5
4
3
6
+3V3
C2
1u
C3
100n
C4
10n
C5
100n
C6
10u
D1
LED
R9
1k
GND
GND
GND
GND
GND
5V TO 3V3 LDO

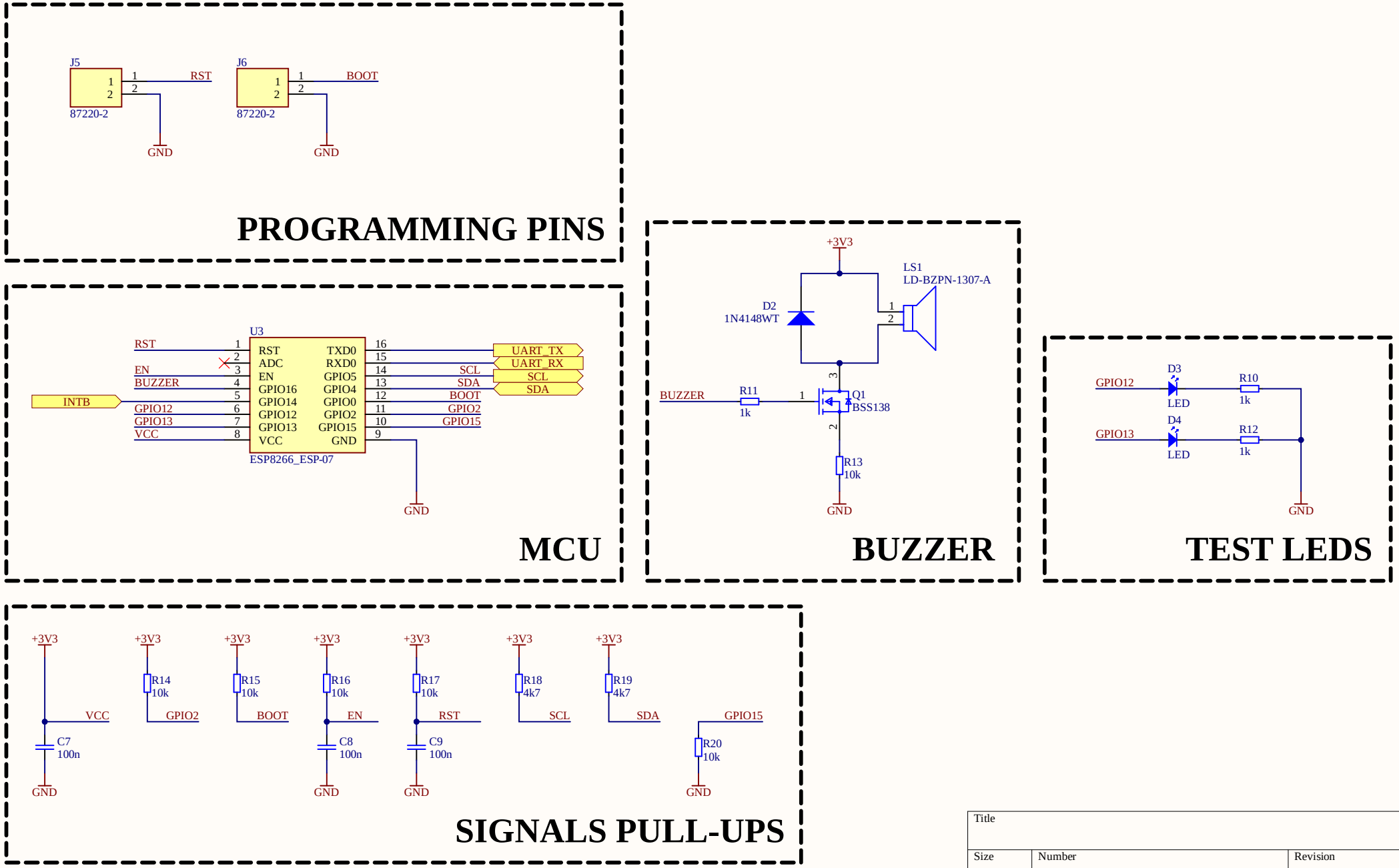

Title		
Size A4	Number	Revision
Date: 4.04.2026		Sheet of
File: C:_Projects\..\MCU.SchDoc		Drawn By:

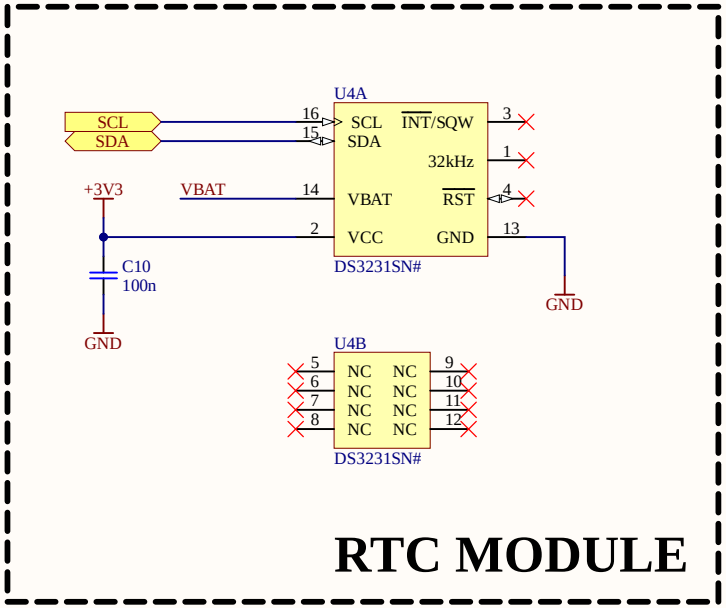

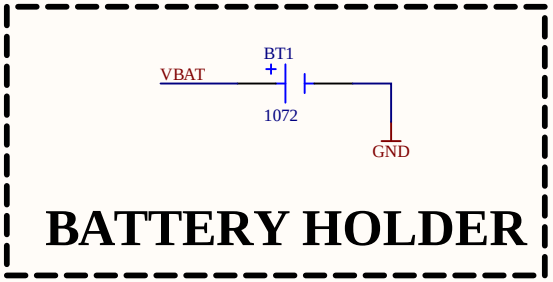

Title		
Size A4	Number	Revision
Date: 4.04.2026		Sheet of
File: C:_Projects\..\RTC.SchDoc		Drawn By:

Board Stack Report