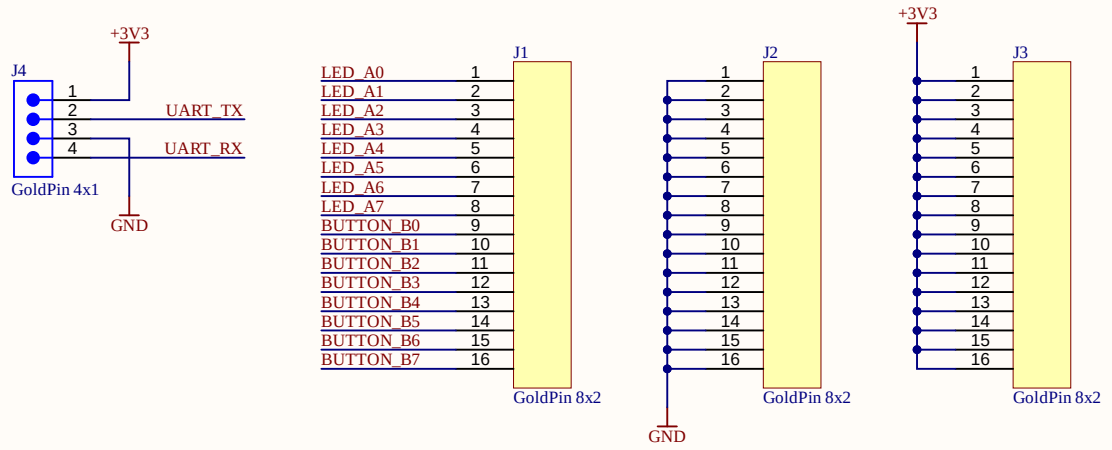

I/O PINS

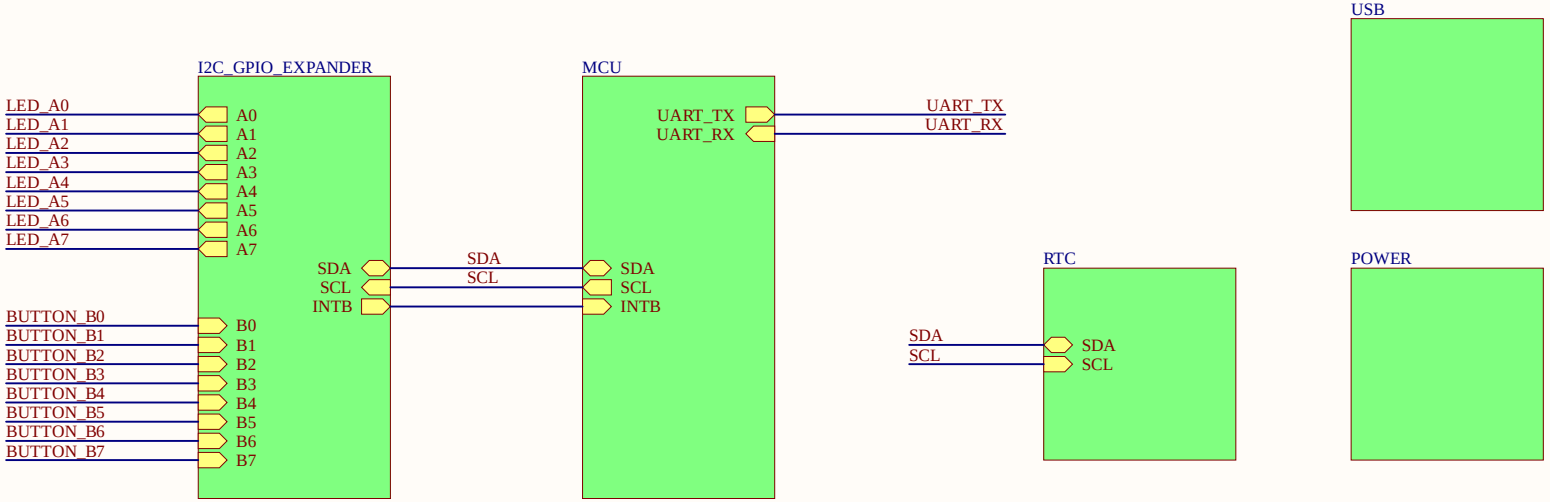

BOARD SCHEME

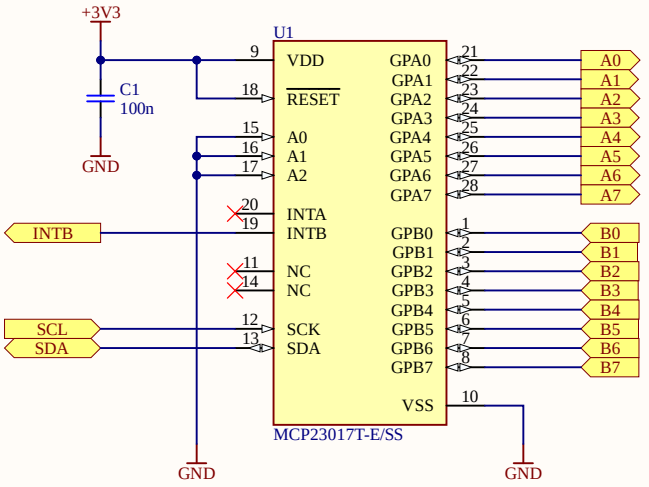

I2C GPIO EXPANDER

Title		
Size A4	Number	Revision
Date: 4.03.2026		Sheet of
File: C:_Projects\..\I2C_GPIO_EXPANDER.SchDoc		Drawn By:

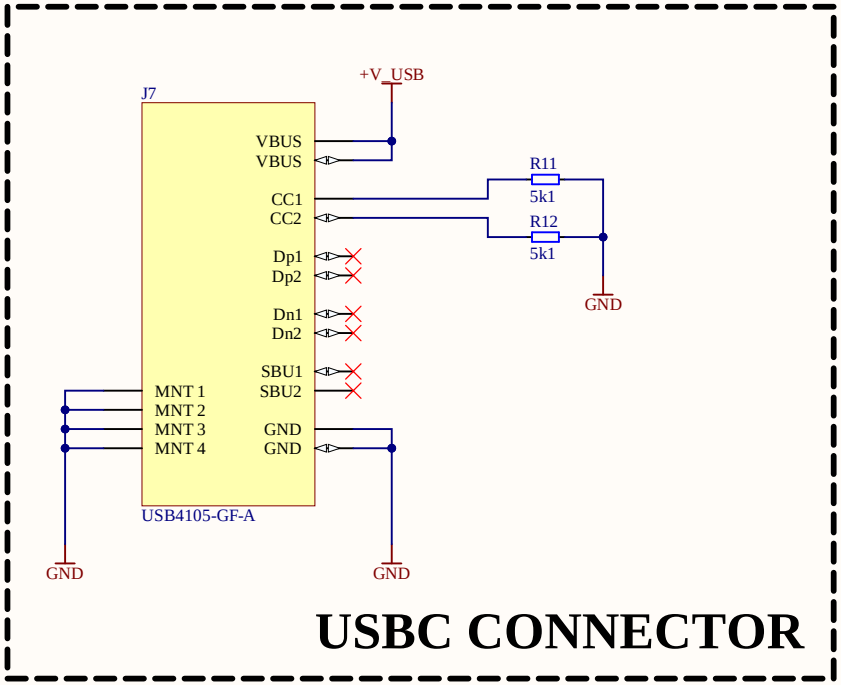

Title		
Size A4	Number	Revision
Date: 4.03.2026		Sheet of
File: C:_Projects\..\USB.SchDoc		Drawn By:

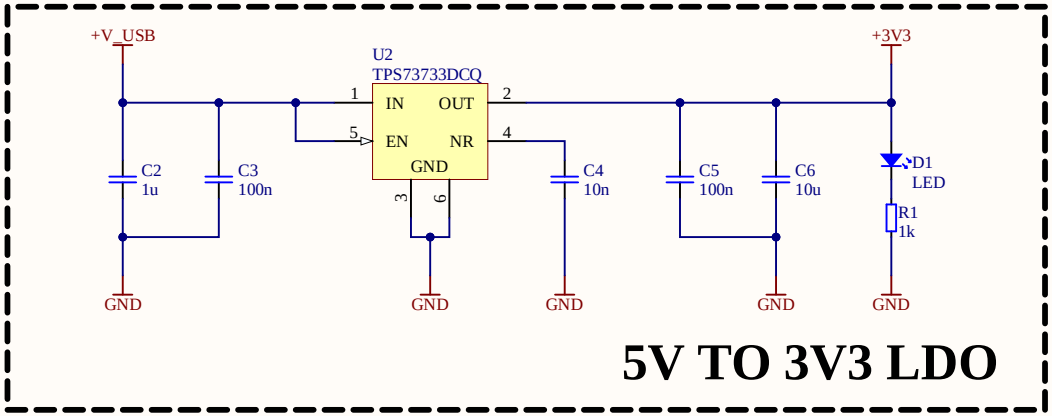
+V_USB
U2
TPS73733DCQ
IN
OUT
EN
NR
GND
1
2
5
4
3
6
+3V3
C2
1u
C3
100n
C4
10n
C5
100n
C6
10u
D1
LED
R1
1k
GND
GND
GND
GND
GND
5V TO 3V3 LDO

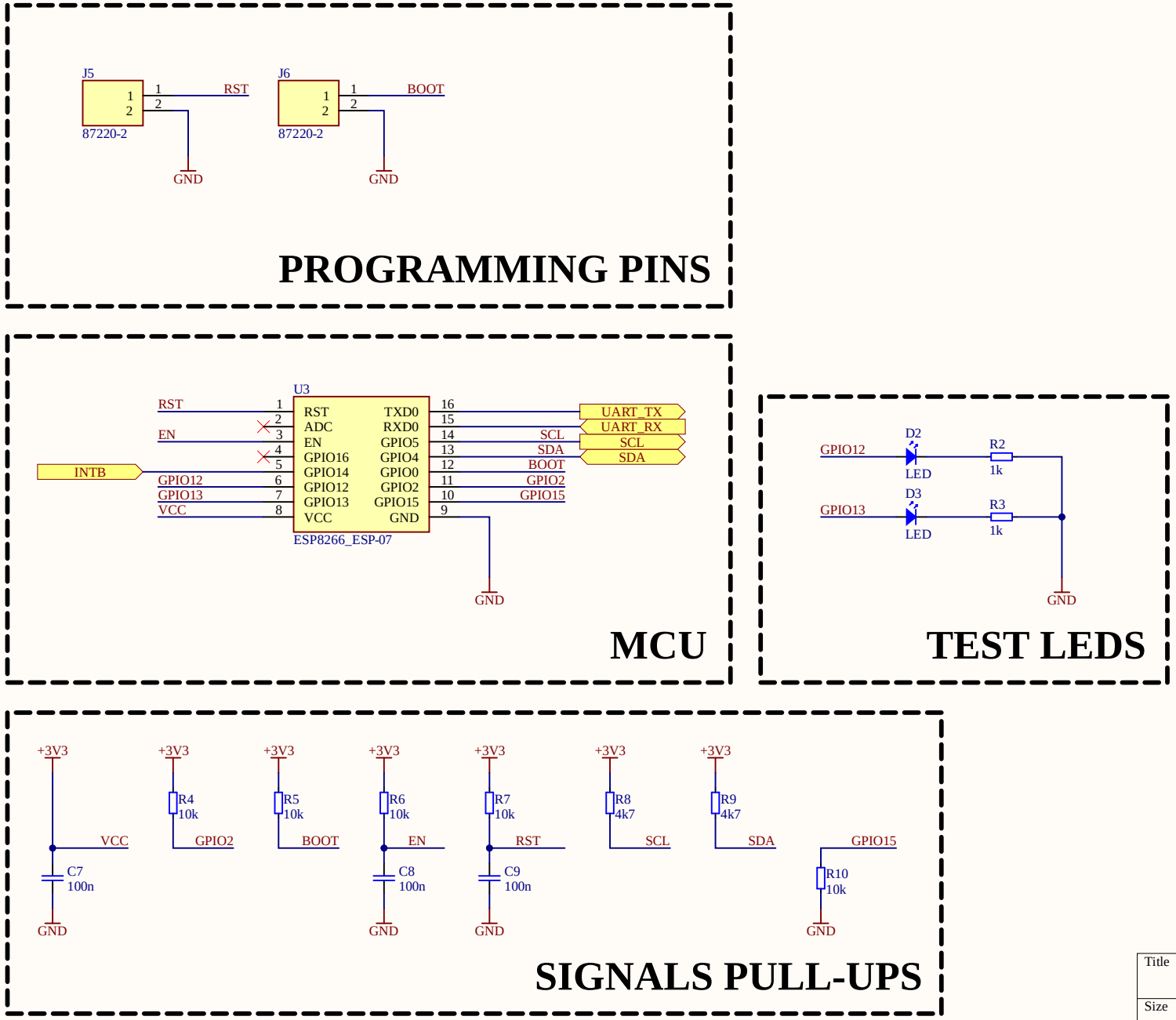

Title		
Size A4	Number	Revision
Date: 4.03.2026		Sheet of
File: C:_Projects\..\MCU.SchDoc		Drawn By:

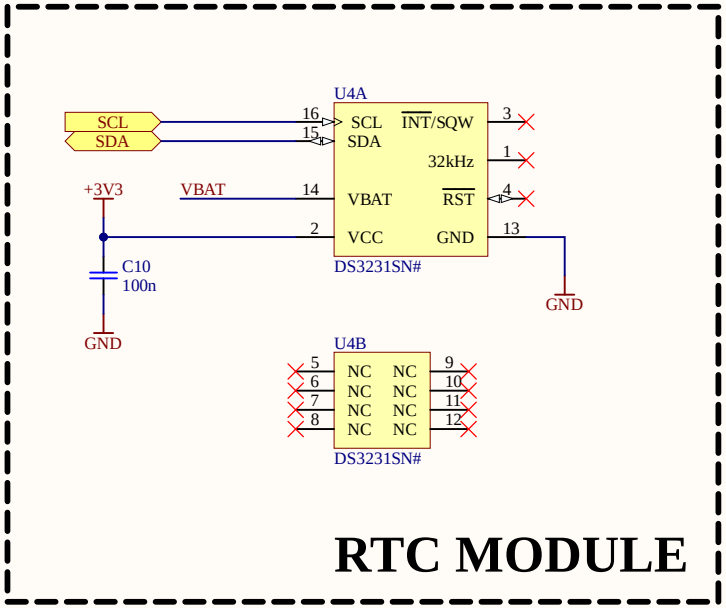

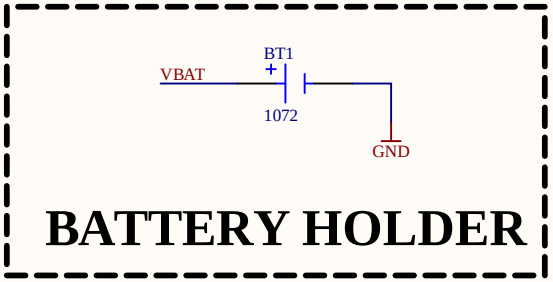

Title		
Size A4	Number	Revision
Date: 4.03.2026		Sheet of
File: C:_Projects\..\RTC.SchDoc		Drawn By:

Board Stack Report