J1对应核心板J2

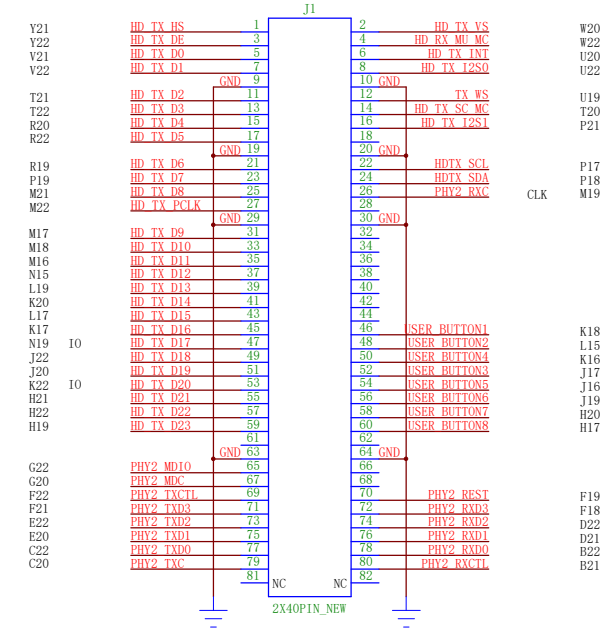

J2对应核心板J3

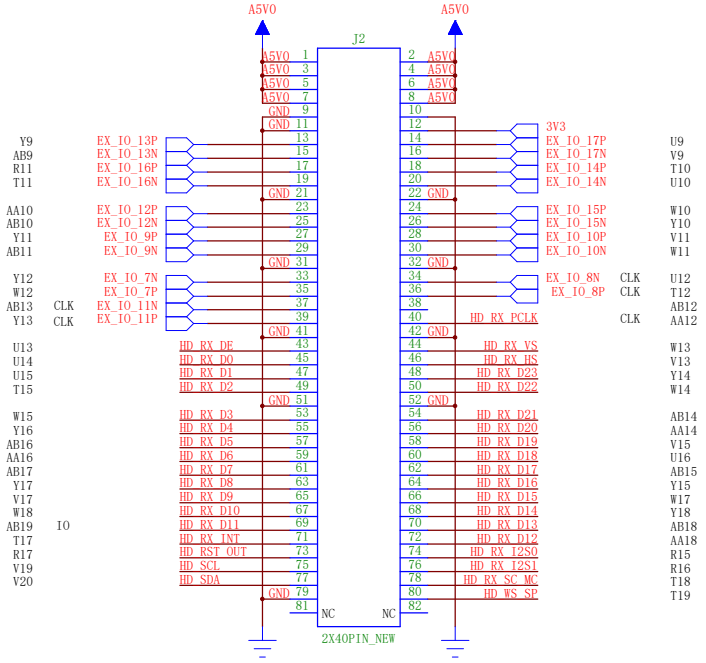

J3对应核心板J4

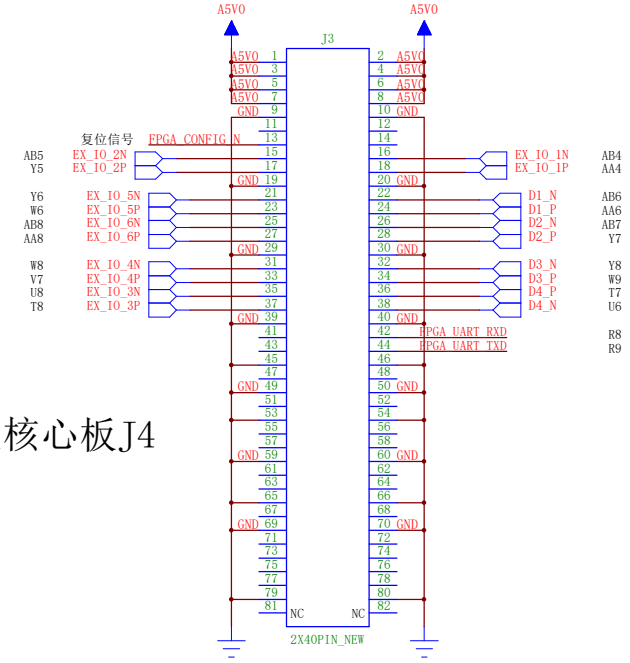

J4对应核心板J5

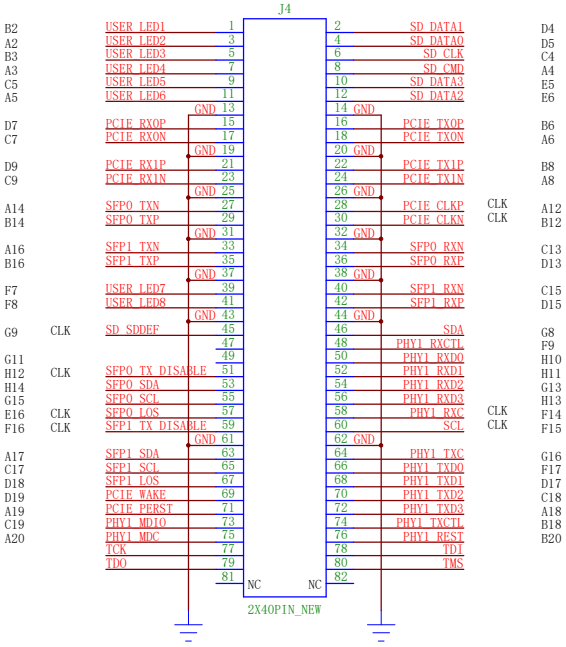

Title:	
Drawing No:	Version:
Drawn By:	Date:
Checked By:	Date:
Approved By:	Date:
Size A3	Sheet: 5/5

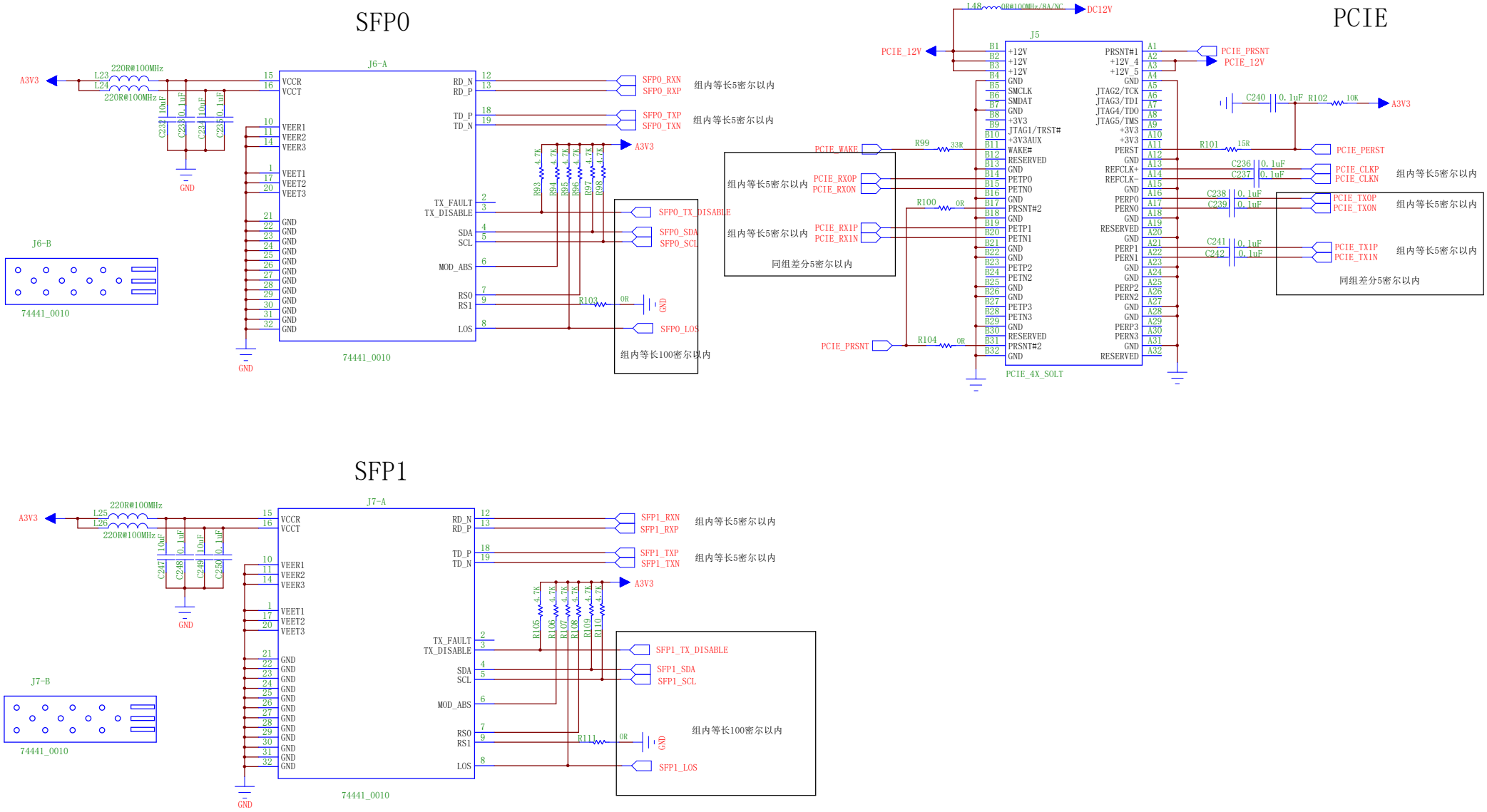

Title:	
Drawing No:	Version:
Drawn By:	Date:
Checked By:	Date:
Approved By:	Date:
Size A3	Sheet: 5/5

ETHENET_1@1000M

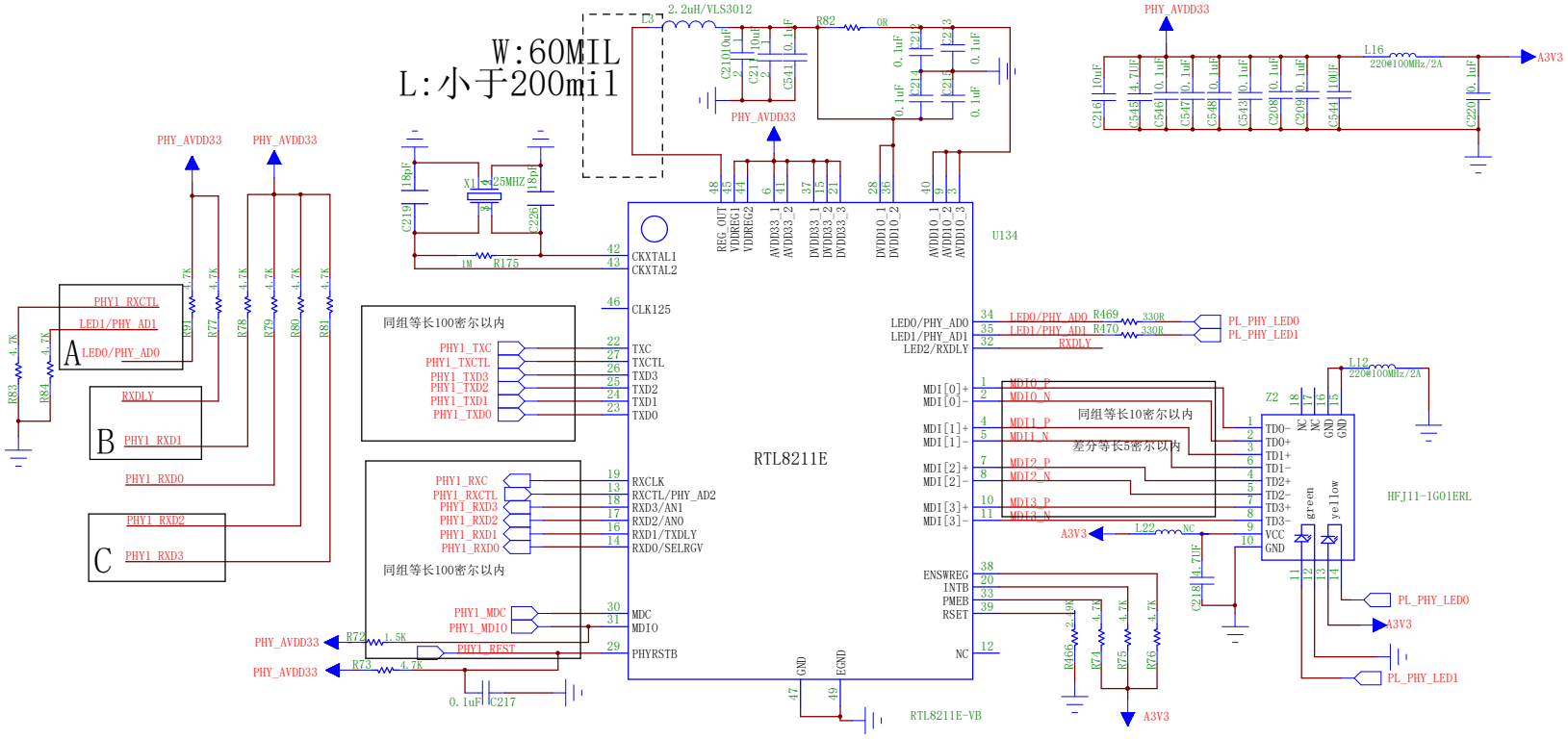

Title:	
Drawing No:	Version:
Drawn By:	Date:
Checked By:	Date:
Approved By:	Date:
Size A3	Sheet: 5/5

ETHENET_2@1000M

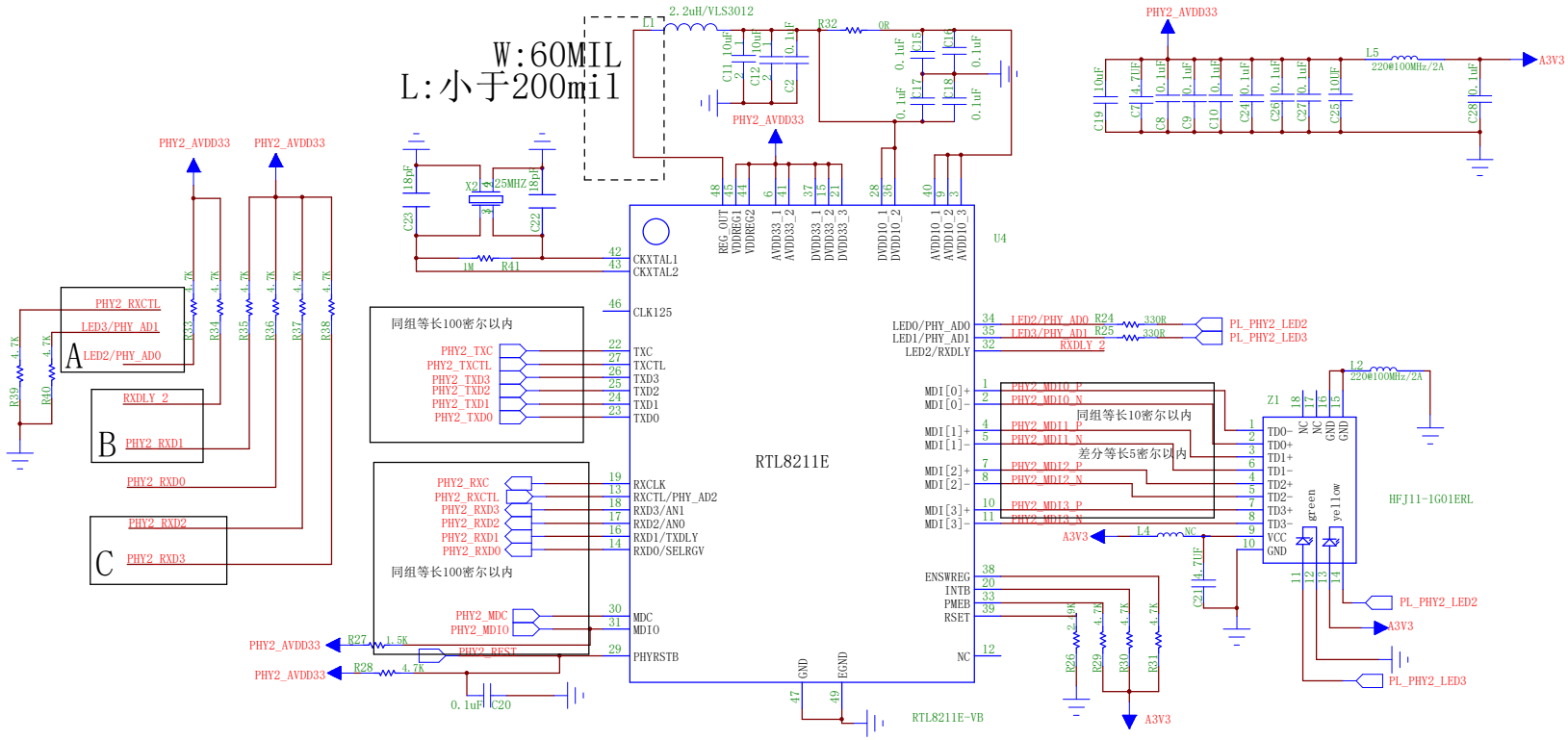

Title:	
Drawing No:	Version:
Drawn By:	Date:
Checked By:	Date:
Approved By:	Date:
Size A3	Sheet: 5/5

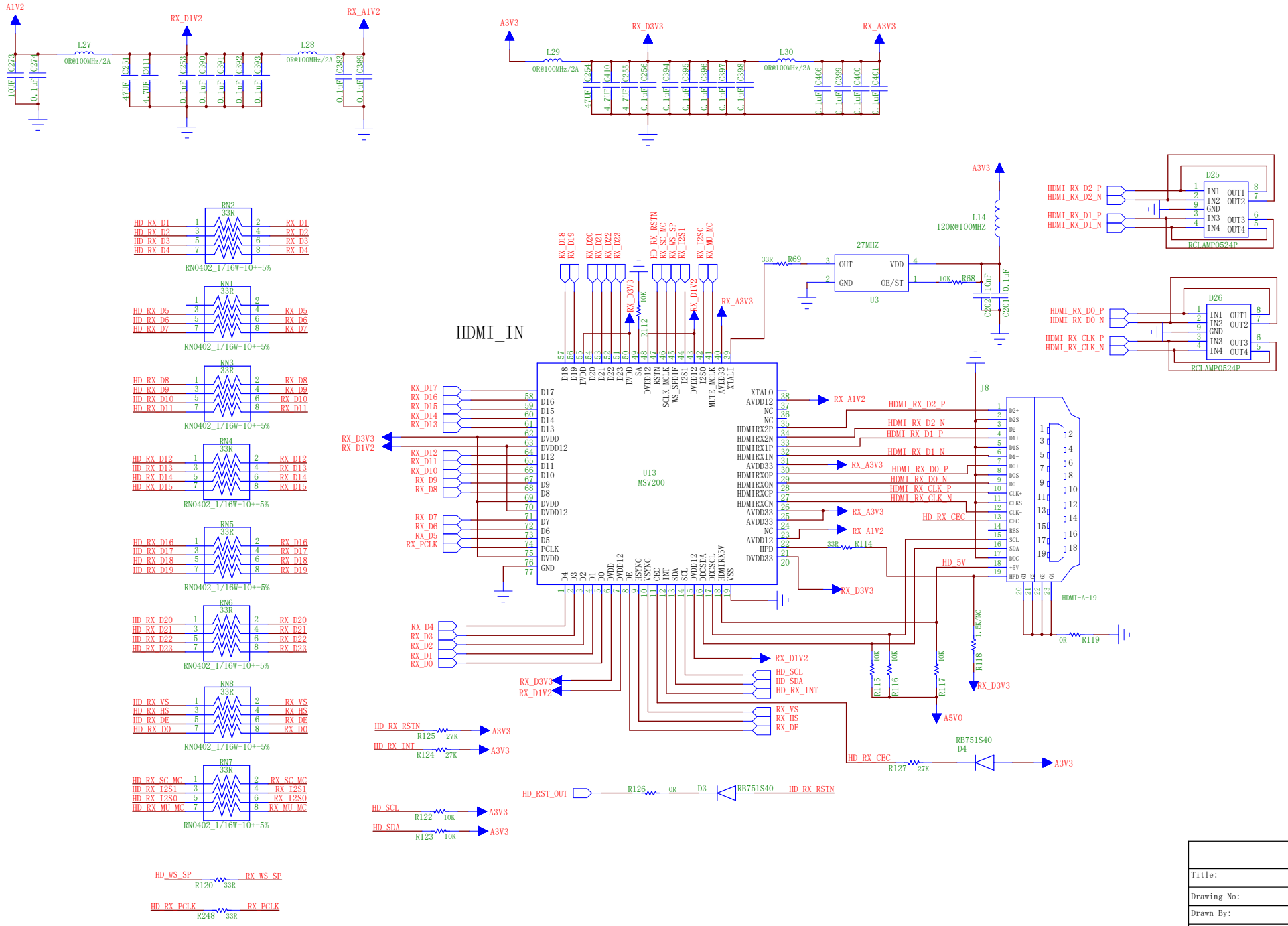

Title:	
Drawing No:	Version:
Drawn By:	Date:
Checked By:	Date:
Approved By:	Date:
Size A3	Sheet: 5/5

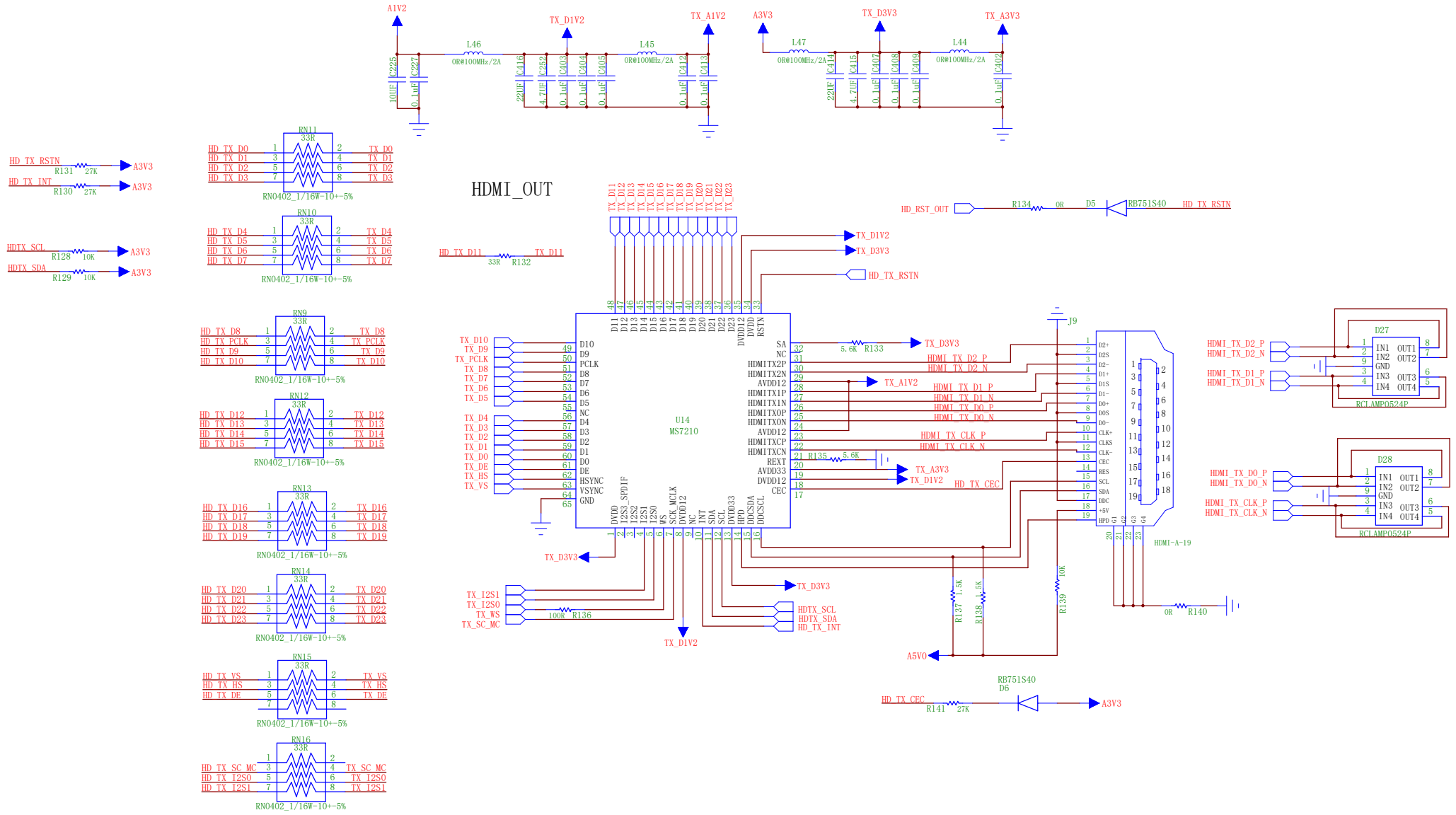

Title:	
Drawing No:	Version:
Drawn By:	Date:
Checked By:	Date:
Approved By:	Date:
Size A3	Sheet: 5/5

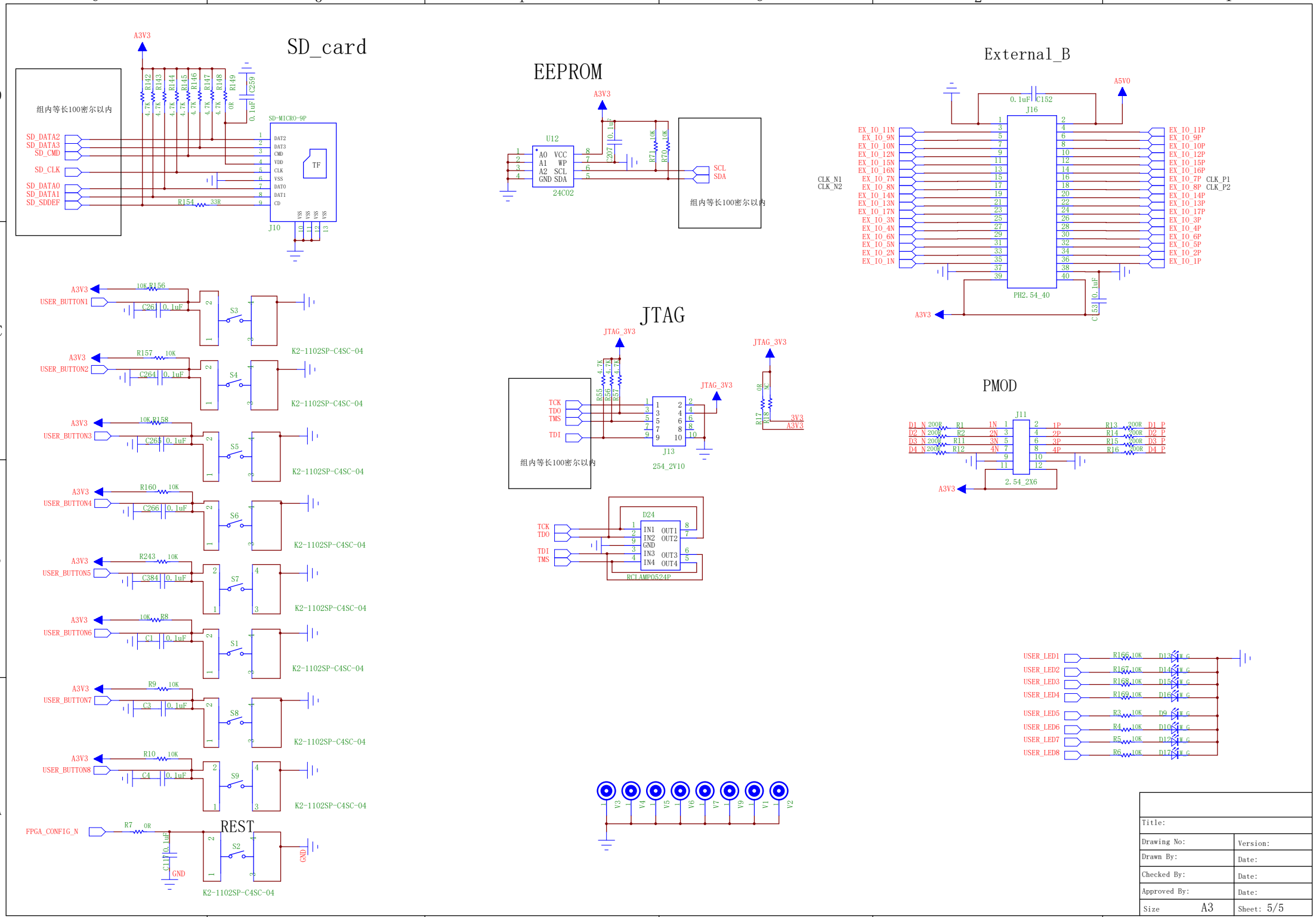

Title:	
Drawing No:	Version:
Drawn By:	Date:
Checked By:	Date:
Approved By:	Date:
Size A3	Sheet: 5/5

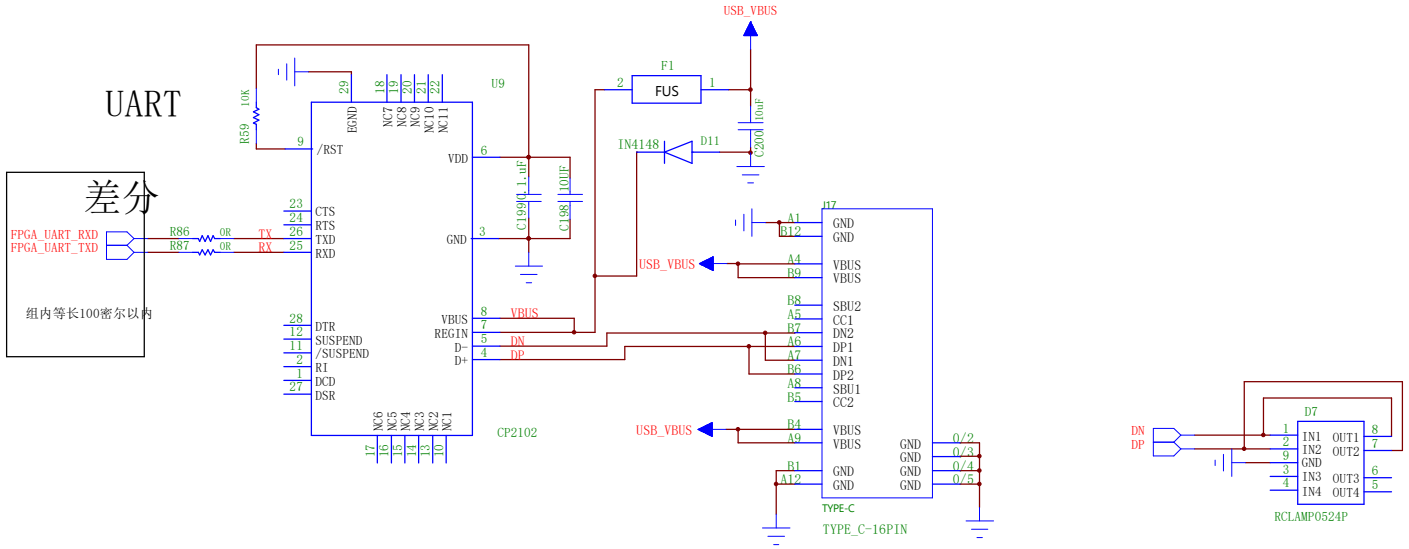

Title:	
Drawing No:	Version:
Drawn By:	Date:
Checked By:	Date:
Approved By:	Date:
Size A3	Sheet: 5/5

Vout=0.8*(1+R1/R2)

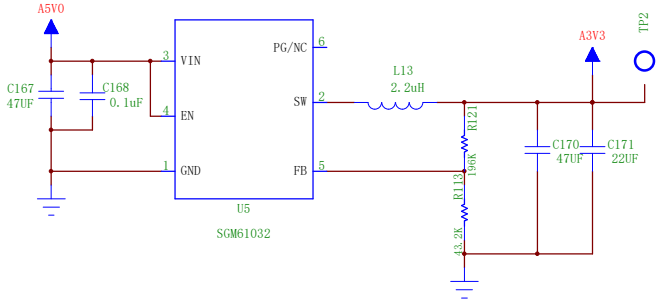

DC12V IN

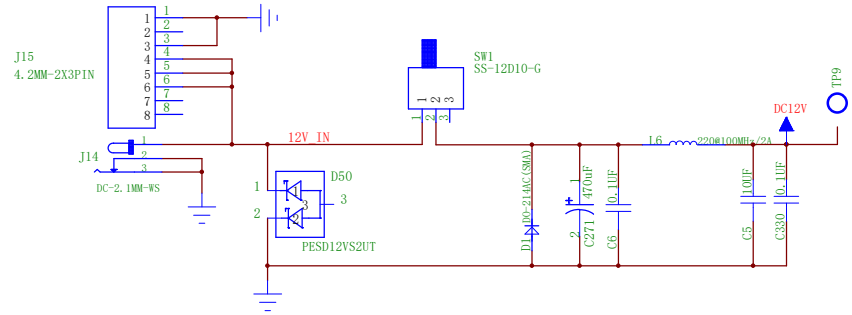

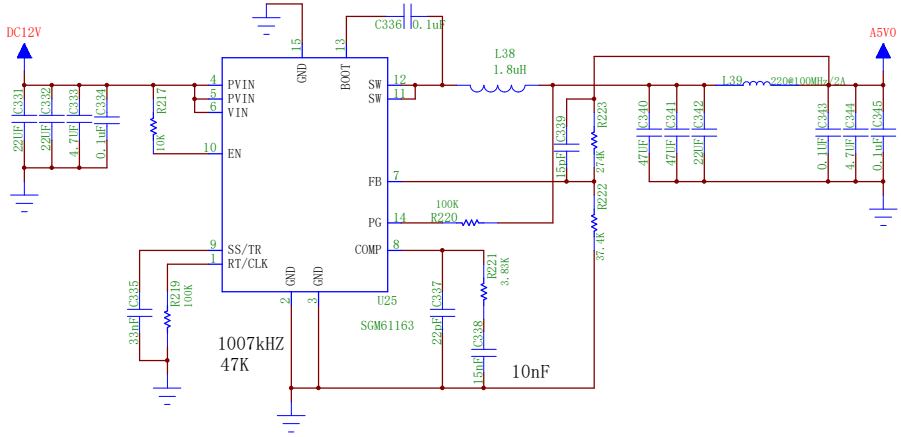

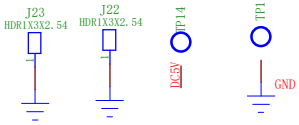

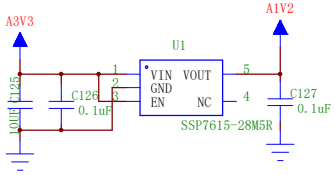

Title:	
Drawing No:	Version:
Drawn By:	Date:
Checked By:	Date:
Approved By:	Date:
Size A3	Sheet: 5/5