Minebea

DIGITAL INDICATOR
CSD-903-EX

Instruction Manual

EN294-1492-K

FOREWORD

Thank you very much for your purchasing the digital Indicator CSD-903-EX.

This manual is provided to explain installation procedures and check points in operation. We would like you to read through this instruction manual with much care for the best use of our product to avoid malfunctions.

We also would like you to deliver the manual to end user surely to keep it at hand.

Marks and references described in this manual

The following marks are placed for the matters that indicate “Don’t do this”, “Caution”, and “For reference”. Please be sure to read following descriptions with marks.

Warning

When you are operating the instrument, you have to pay cautions or restrictions related with this description.
Be sure to read to prevent from malfunction.

Caution

Descriptions that may cause injury or physical damage to operators and such as occurrences of physical damage.

When you are operating the instrument, you have to pay cautions or restrictions related with this description.
Be sure to read to prevent from malfunction.

For safe operation

Be sure to read this manual before operation.

1. Location of installation

Caution

Use the Instrument under the following conditions.

- Environmental temperature : －10 ℃ ~ 50 ℃ (Preservation : －20 ℃ ~ 60 ℃)
  ※The temperature span of JIS B 7611-2 conformity is －10 ℃ ~ 40 ℃.
- Environmental humidity : Less than 85 % R.H.（Non condensing）

Caution

Do not install the Instrument in following places. It may cause damage to the Instrument.

(1) Place to be avoided.

- Places exposed to direct sunlight and/or places in the high temperature.
- Places in a high humid area.
- Places where the instrument is directly affected by vibrations or mechanical shocks.
- Environments containing of corrosive gas or salt, etc.
- Environments with rapid change in temperature and/or humidity.
- Near the devices which generate magnetism or electromagnetic waves.
- Environments vulnerable to radioactivity or radioactivity rays.
- Environments where chemical reaction may take place such a laboratory.

(2) Installing the Instrument

Caution

Please secure and set up the spaces between CSD-903 and the devices.

Followings are the dimensions of the Instrument and for environmental spaces required:

Front

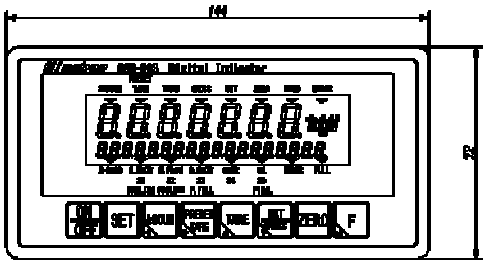

Side

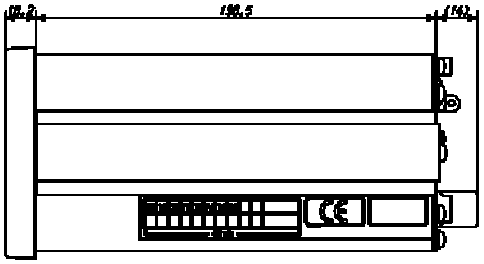

Rear dimension

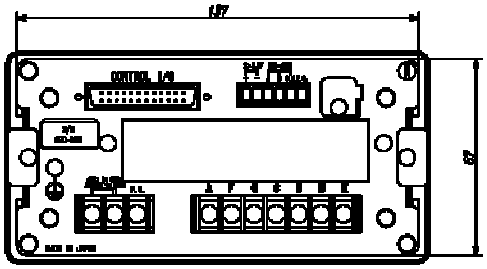

Panel cut

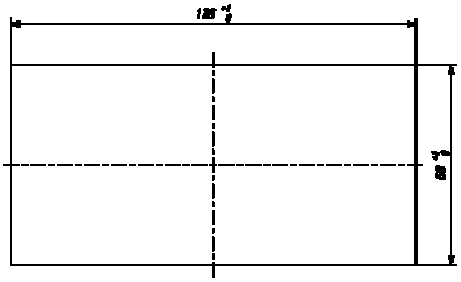

unit: mm

The side view when BCD connector is installed. (The I/O connector for external control attached is the same dimension as a BCD connector.)

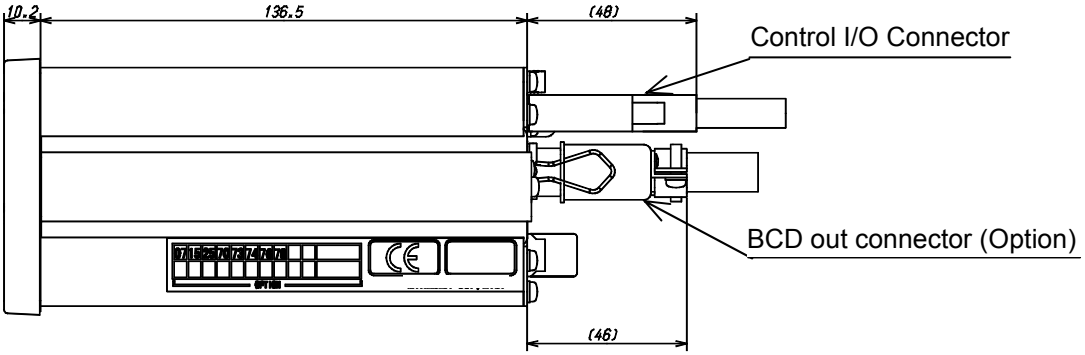

unit: mm

(3) Applicable environment

Warning: The instrument may subject to use in a highly humid area or in full of powder dust.

In such a case, use the instrument by inserting the panel mount gasket attached between the control panel (cabinet) and the main body.

By inserting the panel mount gasket, the front panel section becomes IP65 (International Protection Code) or equivalent in dust-proof and water-proof construction.

* Care should be taken when handling the panel mount gasket.

2.

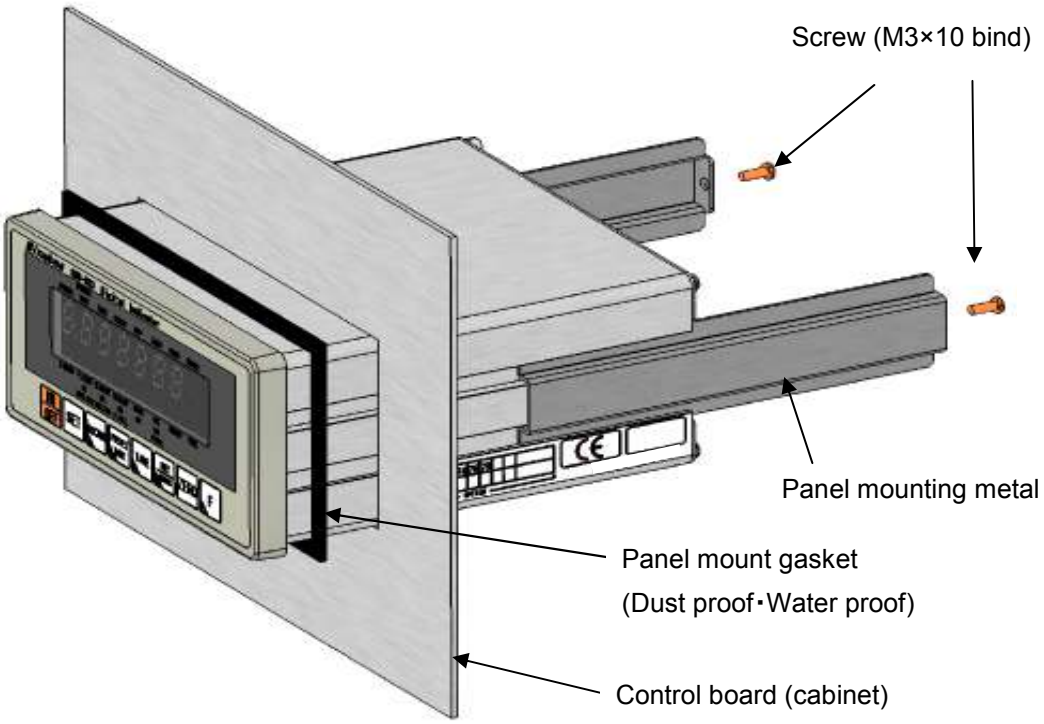

Power supply

Warning

Be sure to check that power supply is OFF when installing each cable. If an operator works with power ON, he/she may have an electric shock or the instrument may be destroyed.

Warning

Before supplying power, check the indication of power voltage/specifications to be identical with supplied power. If they are not identical, contact with us. Without checking the above, operation may cause damage to the instrument or electric shock.

Caution

Be sure to ground a grounding wire. If a grounding wire is not grounded, it may cause malfunction of the instrument or an electric shock to an operator.

3. Instructions for use

Caution

Before using a new instrument, or when exchanging a strain gage applied transducer for a new one, be sure to make calibration. If neglected, it may cause incorrect results in measurement or malfunction in the instrument and moreover may cause damage to peripheral equipments. When similar trouble occurs after calibration, be sure to make calibration again, even if calibration has completed.

Caution

When using the instrument, check that wires are connected properly. If neglected, correct measurement cannot be obtained and it may cause malfunction in the instrument or cause damage to peripheral devices or a critical accident.

Caution

Improper change of setting during operation may cause incorrect measurement or malfunction, or cause damage to peripheral equipments.

Caution

Do not give the instrument such a shock as throwing something at it.
It may cause damage or destroy electrical circuits and even have loose resistance to environment or operability.

Caution

Do not remove the cover of the case of the instrument, nor peel off the panel sheet nor take the instrument into pieces. If neglected, it may cause damage to the case and the panel sheet and even have the possibility of damage to resist to environments or operational performances.

At the time of shipment from the factory, the instrument has been plated with a clear sheet on the panel sheet for protective purpose. In case of application, use the instrument after removing the clear sheet first.

Do not push the panel sheet on the instrument with the excessive strong force nor push it with sharp edge object such as a driver. If neglected, it may cause damage to the panel switch and even have the possibility of damage to resist to environments or operational performances.

4. Conformity standard

This instrument has suited the following standard.

EN61326：2013

[Electrical equipment for measurement, control, and laboratory use － EMC requirements]
[Immunity test requirements for equipment intended for use in industrial locations]

EN61010-1：2010

[Safety requirements for electrical equipment for measurement, control and laboratory use - Part 1：General requirement]

EN50581：2012

"Technical documentation for the assessment of electrical and electronic products with respect to the restriction of hazardous substances" (RoHS Directive)

Annex C (Performance level H) of JIS B 7611-2：2015
[Non-automatic weighing instruments – Metrological and technical requirements and tests - Part 2：Measuring instruments used in transaction or certification]

Caution

The instrument with the software ver.2.100 or later conforms to the JIS standard.

Caution

Please observe the following conditions strictly when this instrument suits the below if neglected, it may not conform to the above standard.

(1) Shield processing

- Use the shielded cable other than the power cable.
- Refer to relative notes, for method of shielding process.

(2) Grounding

- The ground of this instrument shall apply the individual ground by using the protective ground terminal.

Caution

Please observe the following conditions strictly when this instrument suits the JIS standard.
If neglected, there is a possibility of not suiting the above-mentioned standard.

(3) Setting Functions

As for the details of the function of the value of C Function and Function, please refer the paragraph 5-2 and 7-2.

CF-03	[Condition of over display] shall be applied the value of 2.
CF-08	[Net weight sign inversion] shall be applied the value of 0.
CF-11	[Effective range of zero set] shall be applied with less than the value of 02.
CF-13	[Data width of zero tracking] shall be applied with less than 4% of weighing capacity.
CF-20	[Set the stability detection in condition display while the set mode 2 or set of preset tare] shall be applied the value of 0.
CF-21	[Set the unit display in sub-display section while the set mode 2 or set of preset tare] shall be applied the value of 0.
F-01	[Setting of digital filter] shall be applied with more than the value of 016.
F-02	[Setting of analog filter] shall be applied with less than the set value of 01.
F-05	[Setting of stabilization filter] shall be applied with more than the value of 092.
F-06	[Data width of stabilization filter] shall be applied with less than the set value of 020.
F-07	[Time width of stabilization filter] shall be applied with more than the value of 05.
F-10	[Stability detection data width] shall be applied with the set value of more than 20.
F-11	[Stability detection time width] shall be applied with more than the value of 10.
F-15	[Operating condition of the preset tare weight cancellation] shall be applied the value of 0 or 1.

[OL] is appeared in the load date section at the over load. [-OL] is appeared in the load data section at the condition of gross value is minus

5. Function set when this is used in the tank weighing system

When using this as a tank weighing system which does not require JIS standard conformity, and is not a specified measuring instrument or is not used in accordance with specified measuring instrument usage, the setting of the function shall be changed to as below.

This becomes the suitable setting for tank weighing system by easing the condition of [Over display], [Zero set] and [Tare weight cancellation].
Examine this setting based on the user's weighing condition.

(1) Setting functions

CF-03	Set the value of [Condition of over display] to 1: (Exceeding to the weighing capacity ±110%).
CF-10	Set the value of [Operating condition of zero set] to 1: (Operation by unconditional).
CF-11	Set the value of [Effective range of zero set] to 10: (±10 of the weighing capacity).
CF-16	Set the value of [Operating condition of tare weight cancellation] to 3: (Operate unconditionally and 0 < GROSS ≦ |Weighing capacity|).

Divisional history

Data	Manual NO.	Revision reason(content)
2010/10	DRW. NO. EN294-1492	First edition VER. 1. 000
2011/2	DRW. NO. EN294-1492A	Due to ECN No.FN10-02182A,FN11-02001 ROM Ver.2.100 or later - Addition – Preface 4.[JIS B 7611-2 : 2009] conformity standard. 4-3-1. addition of procedure 6-5. [System using the zener barrier] is added. 6-11. [Setting while set mode 2 or set of preset tare] 6-11-1.[Operation for stability detection] 6-11-2.[Operation for unit display in sub-display section] Clause 6 and item number correction 12.[EzCTS mode] is added to [Check mode]. 12-2.[EzCTS mode] Clause 12 and item number correction 16-3-12.[Reading out ROM version] is added command. 25.[CF-20] or [CF-21] is added to [Setting table for functions]. Additional correction of contents. - Correction- Preface 4.[EN61326:2009] → [EN61326:2006] 14-3-4.[Delay time of RS-485 return data] 16-3-10.[DE-9S-N(JAE)] → [DE-9S-NR by JAE or equivalent.] 18-4.Power consumption [Approx. 8 VA] → [Approx 10 VA]
2011/10	DRW. NO. EN294-1492B	Due to ECN No.FN11-02123 ROM Ver.2.200 or later - Correction- Preface 1. Change picture of front view and panel mounting view. 9. Correct the numbers of reference clause and mistakes. 9-3-2. Correct the drawing of simple comparison discharging mode. 16-1-5. Correct the graph for scaling of analog output. - Addition- 1-1. Add the contents of the each function for condition display section 2. 9-2-1. Add the contents of condition display section in the measurement comparison value 1 setting mode. - Deletion- 16-2-9. Delete the notes sentence・If set value of CF-03 is 2 and fross value is minus, BCD output shall be data over condition.
2011/12	DRW. NO. EN294-1492C	Due to ECN No.FN11-02123 - Deletion- 6-9-1. Delete the notes sentence・The tare weight cancellation is not accepted when gross value is below the zero.
2012/12	DRW. NO. EN294-1492-D	Due to ECN No.FN12-02088 -Correction- Change of Minebea's Logo. - Addition- 2-3. Add the applicable connector. 2-4. Add the applicable connector and note. 2-5. Add the applicable connector and note.

Data	Manual NO.	Revision reason(content)
2012/12	DRW. NO. EN294-1492-D	Due to ECN No.FN12-02095 -Correction- 7-2., 8-5., 16-3-12.(12) change the explanation of key lock. 7-2., 16-2-2., 16-3-12(12) change the explanation of stream mode. 16-3-14. Correct the explanation of procedure for communications. -Addition- 4-3-8. Add the note. 16-3-14. Add the explanation for calibration procedure. 6-2., 7-1., 8-14., 9-2-1., 9-2-2., 9-8., 10-18., 11-3., 16-2-13(9), (10), (12). Add the note,and correction of error in writing. Due to ECN NO.FN12-02097-A -Correction- 1-1. Change the clause in the explanation of ZERO from [Gross value or Net value] to [displayed]. 4-3-6. Change the displayed number of dight for load cell output voltage at zero calibration. 4-3-7. Change the displayed number of digit for load cell output voltage at span calibration. 5-2. Change the number of digit for CF-93. and CF-94. 12-7. Change the number of digit for load cell output voltage. 16-3-3. Change the explanation of when RS-422/485 is used. 16-3-4. Change the explanation, title and note. 16-3-12. Command list for reading and writing the set value. 16-3-13. (1)Change explanation title. (2)Change explanation title. -Addition- 7-2. Add F-18/48/49. Add the set value of F-19/47. Add the contents of item of F-41. 8-9. Add the target of hold to holding explanation. 8-9-2. Add the detailed information of holding target. 8-10-1. Add the selection item of sub display. 14-3-1. Add the stream mode and note. 14-3-6. Add the explanation of output target in stream mode. 16-3-12. Add F-17., F-18., F-48., F-49., to the command list for reading and writing the set value. Add the set value 9 ~ 15 of F-19 and 2 of F-47. 16-3-14. (7) 2) Add the registration command for zero of the fifth decimal point digit. (10) 2) Add the registration command for span of the fifth decimal point digit. 25. Add the F-18.,F-48., and F-49 to the table of function settting. Add the setting of 9 ~ 15 to the setting table of sub display (F-19). Due to ECN No.FN12-02119 -Addition- 16-1-1. Add the resolution. 16-1-2. Add the resolution. 18-3. Add the resolution.
2013/05	DRW. NO. EN294-1492-E	Due to ECN No.FN13-02078 - Addition- 15. Add a sentence to the configuration table.

Data	Manual NO.	Revision reason(content)
2015/07	DRW. NO. EN294-1492-F	Due to ECN NO.FN15-02117 < Correction > Cover : Change [MINEBEA] logo Foreword, Ⅶ. Change the setting amount for operating condition of Preset tare weight cancellation 7-2., 8-10., 16-3-12. Change the combination including [Brand]. 8-11. Change the display range of accumulating operation. 8-11-2. Correct the note of accumulating operation. 25.Setting table for functions <Additional> Foreword, Ⅶ. Add the setting value of net weight sign inversion. 3-1. Add the accumulation display mode. 5-2., 6-6.Add the net weight sign inversion and explanation. 7-2. Add the preset tare weight cancellation operating condition, comparator brand setting target, operating mode of RS-232C interface, brand switch target, brand number, and external control input. 8-7-3. Add the explanation of net weight offset operation. 8-11. Add the explanation of accumulation value clear and accumulation time clear. 8-12. Add the explanation of brand switch target. 8-14. Add all brand accumulation clear, brand-1, brand-2, and brand-4. 9-2. Add the explanation of brand number setting method. 9-5., 9-6. Add the explanation of set value of 4-steps comparator mode. 9-9. Add the batch/discharge brand setting and all brand accumulation clear. 10-11. Add the explanation of batch/discharge brand setting target. 14-3. Add the explanation of operating mode. 15. Add the explanation of command and calibration by communication. 16-3-12. Add the accumulation amount (10 digits), effective brand number, setting brand number, comparator brand setting target, all brand accumulation clear, RS-232C operating mode external control input.
2016/05	DRW.NO. EN294-1492-G	Due to ECN FN16-02057 - Deletion- Delete ‘Minebea Co., LTD. Measuring Components Business Unit’ from the front cover.
2017/08	DRW.NO. EN294-1492-H	Due to ECN FN17-02017 ・Delete the company name in the contents.
2018/01	DRW. NO. EN294-1492-I	Due to FN17-02066C Add and correct the applicable standard. - Add [EN50581・2012] - Correct from [EN61326-1:2006] to [EN61326-1:2013] - Correct from [EN61010-1:2001] to [EN61010-1:2010] - Correct from [JIS B 7611-2：2009] to [JIS B 7611-2：2015]

Data	Manual NO.	Revision reason(content)
2018/02	DRW. NO. EN294-1492-J	Due to ECN No.FN18-02017 < Correction > Change the clause in 2-3. Note column as follows; from (・Refer to [8-13-1. Setting ~.) to (・Refer to [8-14-1. Setting ~.) from (・Refer to [8-13-2. Setting ~.) to (・Refer to [8-14-2. Setting ~.)
2018/12	DRW. NO. EN294-1492-K	Due to ECN No.FN18-02080 -Addition- ・5.Function set when this is used in the tank weighing system. Contents ・5.Function set when this is used in the tank weighing system.

Contents

FOREWORD I

MARKS AND REFERENCES DESCRIBED IN THIS MANUAL I

FOR SAFE OPERATION II

1. LOCATION OF INSTALLATION II

2. POWER SUPPLY V

3. INSTRUCTIONS FOR USE V

4. CONFORMITY STANDARD VI

5. FUNCTION SET WHEN THIS IS USED IN THE TANK WEIGHING SYSTEM VII

DIVISIONAL HISTORY VIII

1. NAME AND FUNCTION OF EACH POINT 1

1-1. FRONT PANEL 1
1-2. REAR PANEL 3
1-3. SIDE 4

2. CONNECTING WIRES 5

2-1. NOTES FOR CONCERNING CONNECTING WIRES 5
2-2. CONNECTION WITH STRAIN GAGE APPLIED TRANSDUCER 6
2-3. CONNECTION OF EXTERNAL CONTROL I/O 11
2-4. CONNECTION OF STANDARD RS-485 INTERFACE 12
2-5. CONNECTION WITH 2-WIRES SERIAL INTERFACE 13
2-6. CONNECTION WITH POWER SUPPLY AND GROUND 14

3. OPERATION 15

3-1. CHANGEOVER OF MODE 15

4. CALIBRATION 17

4-1. SET ITEMS REQUIRED IN THE CALIBRATION 17
4-2. PROCEDURE SET IF NECESSARY AFTER CALIBRATION 17
4-3. CALIBRATION PROCEDURES 18
4-4. FINE ADJUSTMENT OF ZERO AND SPAN 24
4-5. DIGITAL LINEARIZE 27
4-6. CALIBRATION ONLY OF ZERO POINT 30
4-7. LOCK OF CALIBRATION 32

5. C FUNCTION MODE 33

5-1. SETTING METHOD OF C FUNCTION DATA 33
5-2. FUNCTION OF C FUNCTION DATA 34

6. VARIOUS FUNCTIONS BY C FUNCTION DATA 37

6-1. SETTING OF DECIMAL POINT DISPLAY POSITION 37
6-2. A/D SAMPLING RATE 37

6-3. CONDITION OF OVER DISPLAY (ōL OR -ōL DISPLAY) 37
6-4. UNIT 37
6-5. EXCITATION 37
6-6. NET WEIGHT SIGN INVERSION 38
6-7. ZERO SET 38
6-8. ZERO TRACKING 39
6-9. POWER ON ZERO 40
6-10. TARE WEIGHT CANCELLATION 40
6-11. CLEAR AT POWER ON 41
6-12. SETTING WHILE SET MODE 2 OR SET OF PRESET TARE 41
6-13. GRAVITY ACCELERATION COMPENSATION 41
6-14. AUTOMATIC RANGE SWITCH 43
6-15. SETTING OF THE STABILITY DETECTION TIME WIDTH IN CALIBRATION 44
6-16. DIGITAL LINEARIZE CLEAR 44
6-17. MEMORY CLEAR 45

7. FUNCTION MODE 46

7-1. SETTING METHOD OF THE FUNCTION MODE 46
7-2. FUNCTION OF THE FUNCTION DATA 47

8. VARIOUS FUNCTIONS BY FUNCTION DATA 54

8-1. DIGITAL FILTER 54
8-2. ANALOG FILTER 54
8-3. DISPLAY FREQUENCY 54
8-4. STABILIZATION FILTER 54
8-5. KEY LOCK FUNCTION 56
8-6. STABILITY DETECTION 56
8-7. INPUT OF THE PRESET TARE WEIGHT CANCELLATION 57
8-8. PRINT COMMAND 58
8-9. HOLD 58
8-10. SUB DISPLAY SECTION 59
8-11. ACCUMULATION 60
8-12. BRANDS 61
8-13. SETTING OF F KEY 61
8-14. SETTING OF EXTERNAL CONTROL I/O 62
8-15. MEMORY CLEAR 63

9. MEASUREMENT MODE 64

9-1. SETTING METHOD OF THE MEASUREMENT MODE 66
9-2. MEASUREMENT COMPARISON VALUE SETTING MODE 67
9-3. SIMPLE COMPARISON MODE 72
9-4. SEQUENTIAL MODE 76
9-5. 4 STEPS COMPARATOR MODE 1 83
9-6. 4 STEPS COMPARATOR MODE 2 89
9-7. SQ FUNCTION MODE 92

9-8. SETTING METHOD OF THE SQ FUNCTION MODE 92
9-9. FUNCTION OF SQ FUNCTION DATA 93

10. VARIOUS FUNCTIONS BY SQ FUNCTION DATA 95

10-1. WEIGHING MODE 95
10-2. CONTROL MODE 95
10-3. COMPARISON SIGNAL OPERATION 95
10-4. NEAR ZERO (ZERO BAND) COMPARISON OPERATION 95
10-5. FULL COMPARATIVE OPERATION 95
10-6. BATCH MONITORING TIMER 95
10-7. SETTING FOR OPERATION AT THE TIME BATCH START 96
10-8. F-FLOW COMPARE STOP TIMER 96
10-9. M-FLOW COMPARE STOP TIMER 96
10-10. D-FLOW COMPARE STOP TIMER 96
10-11. FLOW/DISCHARGE BRAND SETTING TARGET 97
10-12. AUTOMATIC FREE FALL COMPENSATION 97
10-13. JUDGE CONDITION 97
10-14. WAITING TIME FOR JUDGE 97
10-15. SETTING FOR THE OPERATION OF COMPENSATION FLOW 98
10-16. SETTING FOR THE OPERATION OF MEASURING FINISH OUTPUT 98
10-17. SETTING FOR DISCHARGE OPERATION AFTER MEASURING FINISH 99
10-18. ACCUMULATION CLEAR 100
10-19. SQ FUNCTION CLEAR 100

11. STORED PLACE OF SETTING DATA 101

11-1. DATA RECORDED IN RAM 101
11-2. DATA RECORDED IN EEPROM 101
11-3. DATA CAN BE CHANGED SAVING LOCATION 101

12. CHECK MODE 102

12-1. SETTING METHOD OF CHECK MODE 103
12-2. EZCTS MODE 104
12-3. CONFIRMATION OF ROM VERSION 104
12-4. CONFIRMATION OF OPTIONS 105
12-5. CONFIRMATION OF EXTERNAL CONTROL INPUT 105
12-6. CONFIRMATION OF EXTERNAL CONTROL OUTPUT 106
12-7. CONFIRMATION OF LOAD CELL OUTPUT VOLTAGE 107
12-8. CONFIRMATION OF BCD OUTPUT (WHEN BCD OUTPUT IS APPLIED.) 107
12-9. CONFIRMATION OF ANALOG OUTPUT (WHEN THE ANALOG OUTPUT IS APPLIED.) 108

13. 2 WIRE SERIAL INTERFACE(S-I/F) 109

13-1. INTERFACE SPECIFICATION 109
13-2. DATA FORMAT 109
13-3. FORMAT DATA EXPLANATION 110
13-4. EXPLANATION OF OUTPUT TYPE 110

14. STANDARD RS-485 COMMUNICATION 111

14-1. SPECIFICATIONS FOR STANDARD RS-485 COMMUNICATION 111
14-2. DATA FORMAT 111
14-3. ITEM OF STANDARD RS-485 COMMUNICATION SETTING 111
14-4. CONNECTING METHOD 113

15. MODBUS COMMUNICATION 115

15-1. CALIBRATION BY TRANSMISSION THROUGH MODBUS INTERFACE 123

16. OPTIONS 135

16-1. ANALOG OUTPUT 135
16-2. BCD OUTPUT 140
16-3. RS-232C AND RS-422/485 INTERFACE 145

17. TROUBLE SHOOTING 182

17-1. EXECUTE TROUBLE SHOOTING 182

18. SPECIFICATIONS 196

18-1. ANALOG SPECIFICATIONS 196
18-2. SPECIFICATIONS FOR DIGITAL 196
18-3. INTERFACE 197
18-4. GENERAL SPECIFICATIONS 199
18-5. STANDARD SPECIFICATIONS AT THE TIME OF SHIPMENT 199
18-6. ACCESSORIES 199

19. ERROR DISPLAY 200

19-1. ERROR LOAD DISPLAY 200
19-2. ERROR SUB DISPLAY 201

20. DISPLAY OF SEQUENCE ERROR 201

21. WARRANTY 202

21-1. WARRANTY 202
21-2. REPAIR 202

22. LIFETIME OF USED PARTS 202

22-1. DISPLAY MODULE 202
22-2. EEPROM 202
22-3. ELECTROLYTIC CAPACITOR 202
22-4. BATTERY 202

23. EXCHANGE OF FUSES 203

23-1. EXCHANGE PROCEDURE OF FUSE 203

24. DISPLAY CHARACTER PATTERN 204

25. SETTING TABLE FOR FUNCTIONS 205

1. Name and function of each point

1-1. Front panel

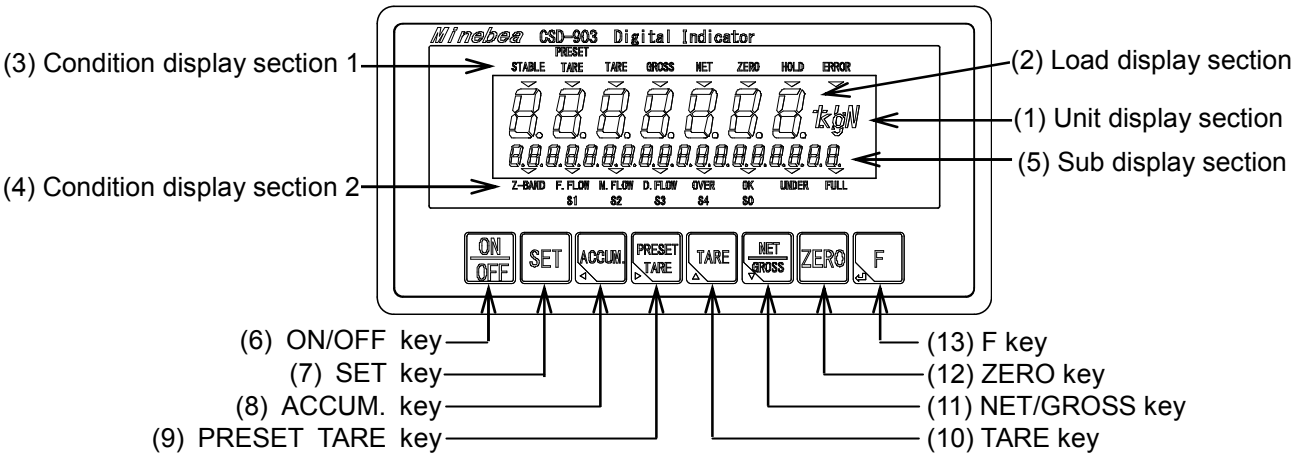

(1) Unit display section

The set measuring unit is displayed.

[○] lights at the unit display section at the stand-by condition (The load display has been turned off while energized)

(2) Load display section

It displays [Gross/Net value], [Over] and [Error].
Also it displays the condition or the setting value in preceding the various setting.

(3) Condition display section 1

It displays the condition of CSD-903.

STABLE	It lights when the measured data is steady.
PRESET TARE	It blinks while setting a preset tare weight cancellation. It lights when a preset tare weight cancellation is set.
TARE	It lights when the tare weight cancellation is executed.
GROSS	It lights when the load display is gross value.
NET	It lights when the load display is net value.
ZERO	It lights when the displayed load value is zero, and within ±1/4 of a scale interval.
HOLD	It lights when HOLD function is active.
ERROR	It lights when the output of ERROR signal outputs.

(4) Condition display section 2

Z-BAND	It lights when a gross or net load value is under the value set as near zero. It also blinks during setting and selecting the Z-BAND.
F.FLOW/S1	It lights when an output signal of full flow is ‘ON’ status in the sequential mode.
/PRELIM2	Also when an output signal S1 is ‘ON’ status in 1 or 2 of comparator mode. It also blinks during setting and selecting the PRELIM2.
M.FLOW/S2	It lights when an output signal of medium flow is ‘ON’ status in sequential mode.
/PRELIM1	Also when an output signal S2 is ‘ON’ status in 1 or 2 of comparator mode. It also blinks during setting and selecting the PRELIM1.
D.FLOW/S3	It lights when an output signal of dribble flow is ‘ON’ status in sequential mode.
/F.FALL	Also when an output signal S3 is ‘ON’ status in 1 or 2 of comparator mode. It also blinks during setting and selecting the F.FALL.
OVER/S4	It lights when the judgment condition becomes over in sequential mode. Also when an output signal S4 is ‘ON’ status in 1 or 2 of comparator mode. It also blinks during setting and selecting the OVER.
OK/S0	It lights when the judgment condition becomes ok in sequential mode.
/FINAL	Also when an output signal S0 is ‘ON’ status in 1 or 2 of comparator mode. It also blinks during setting and selecting the FINAL.
UNDER	It lights when the judgment condition becomes under in sequential mode. It also blinks during setting and selecting the UNDER.
FULL	It lights when the judgment condition becomes full in sequential mode. It also blinks during setting and selecting the FULL.

(5) Sub display

It displays a setting value of an accumulation value, an accumulation count and a sequence operation. Please refer ‘8-10 Sub display section’ as for the details.

(6) ON/OFF key

This key turns the display on and off. When the display is turning off, the electric power is supplied to the inside of the indicator and the measuring section. The display becomes the stand-by condition at the time of turning off.

(7) SET key

Change to the function mode. Change each status to the former status set in advance.

(8) ACCUM. key

It is used for the load value to accumulate, and also it carries up the set digit when the value is set.

(9) PRESET TARE key

It is used when the setting of the preset tare weight cancellation is executed.

And also it carries down the set digit when the value is set.

(10) TARE key

The tare weight cancellation is executed.

And one value of the selected digit is raised when the value is set.

(11) NET/GROSS key

It switches the gross value and net value of the displayed data.

And one value of the selected digit is lowered when the value is set.

(12) ZERO key

It memorizes a present load value as a zero point, and makes the display a zero.

(13) F key

Execute function set in F key.

(Selectable from None, Print, Hold, Start of flow, Emergency stop, Zero clear, Tare weight bear, Accumulation bear, Shift to the setting mode of weighing comparative mode or Forced batch finish)

Otherwise, decide the various data input and memorize the setting value in internal memory.

1-2. Rear panel

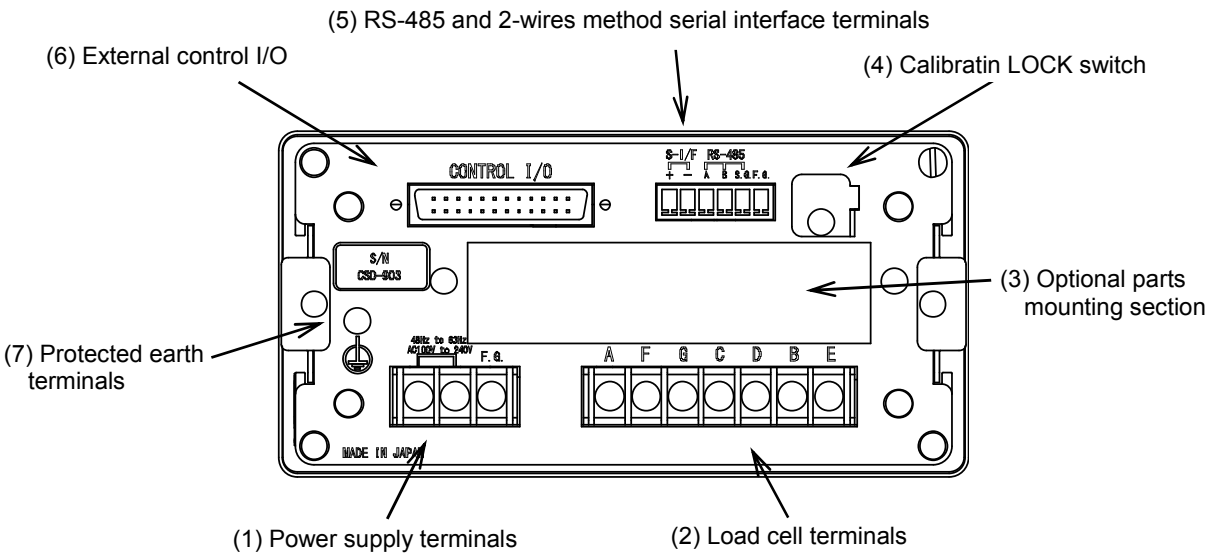

(1) Power supply terminals
It connects with power supply and ground.

(2) Load cell terminals
The signal line of the weighing part (load cell) is connected.
Up to 6 pieces of strain gage based transducer scan 350 Ω be connected when the bridge power supply is DC10 V.

(3) Optional parts mounting section
One point either of analog electric current output, analog voltage output, BCD output, CC-Link, RS-232C or RS-422/485 is installed.

(4) Calibration LOCK switch section
Calibration LOCK switch can be operated by removing the cover.

(5) RS-485 and 2-wires method serial interface terminals
RS-485 interface terminals connect with a host computer, etc., and the 2 wires method serial interface terminal connects with a printer, an external display unit, etc.

(6) External control I/O connector
It uses to connect with the external control unit.
Up to 9 input and up to 13 output in available to use.

(7) Protected earth terminals
Grounding wire should be connected to prevent the influence of noise such as static electricity.
Do not connect it other than the grounding.
F.G. of the power supply terminals is common internally.

1-3. Side

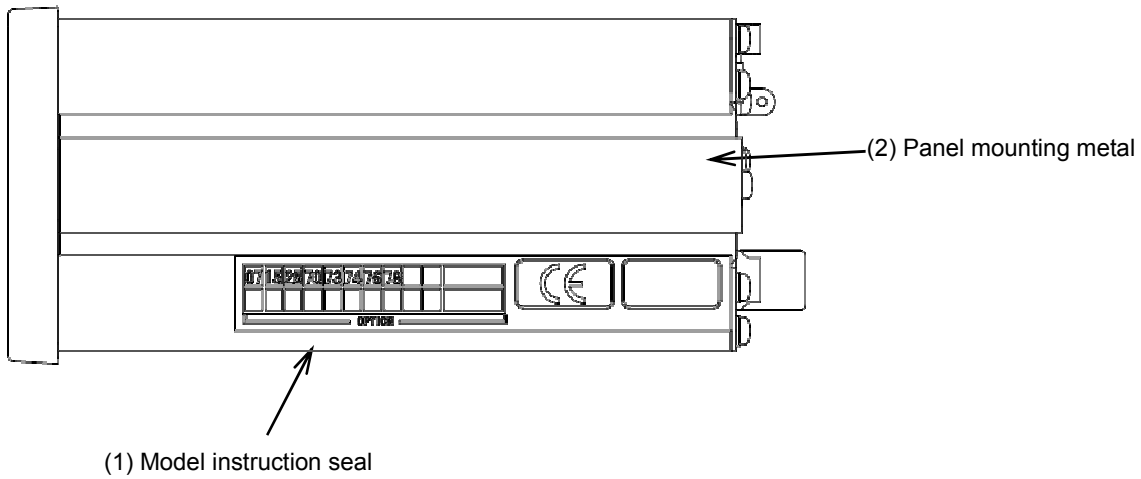

(1) Model instructions seal
It shows a model number.

(2) Panel mounting metal
Use when CSD-903 is mounted to the control panel.

2. Connecting wires

2-1. Notes for concerning connecting wires

- When connecting with wires, make sure it was turning off the power supply without fail.
- Do not supply the AC power supply until the installation is completed. There is no switch that switches ON/OFF of power supply in the main body.
- Do not drop the instrument, and do not give a strong impact because the terminal board of the panel is made of resin.
- Be sure to install and use an acrylic cover of the attachment for the terminal board.
- The tightening torque of terminal screws on the terminal board is as shown in the table below.

Terminal board	Terminal board screw tightening torque
Power supply terminal board Loading cell terminal board	0.6 N·m

The solder less terminal that suits the terminal board of this terminal is as shown in the table as below.

Terminal stand	Width of solder less terminal	Acceptable Oki solder less terminal
Power supply terminal board Loading cell terminal board	6.2 mm or less	O type 1.25-3 or Y type 1.25-3.5

- The cable connected with the main body should be separated from the noise source such as I/O for the control, power supply line as possible.
- The Conduit wiring should be the type for exclusive use. Avoid sharing it with other lines.
- Be sure to ground a grounding wire with exclusive use of D-type single grounding. Do not share it with other groundings for power supply.
- The shield cable line is used for the connection of the external control I/O, and the shield with F.G terminal of the power supply terminals

2-2. Connection with strain gage applied transducer

The instrument can connect with the strain gage applied transducers, such as load cells, pressure sensors, etc. Here, we describe the example of connection with load cells, so that the connection with another type of strain gage applied transducers shall be preceded in the same way.

When the tension is applied with the use of tension type or universal (tension/compression) type load cell, and display of (+) direction is required, connect the input (+) of the load cell to the terminal B and the input (-) of the load cell to the terminal D individually.

(1) Case 6-wires type connection cable

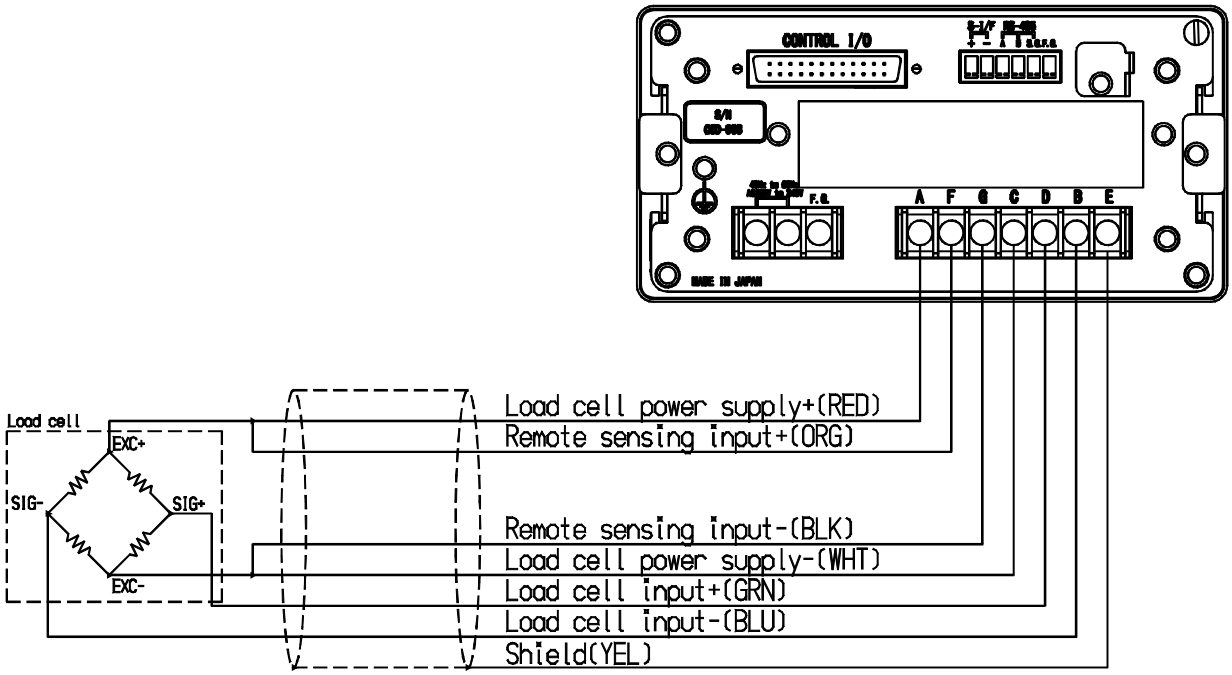

- **When the length of CAB-501 (our standard cable) is more than 100 m totally, there may have the case that accuracy is out of warranty as the remote sensing function of the instrument does not work enough due to the resistance of the cable.**
- **Shorten the remote sensing input + and remote sensing input – near the main body of load cell. However, when the short is made near the instrument, it will not work as the six-wire type.**

(2) Case 4-wire type connection cable

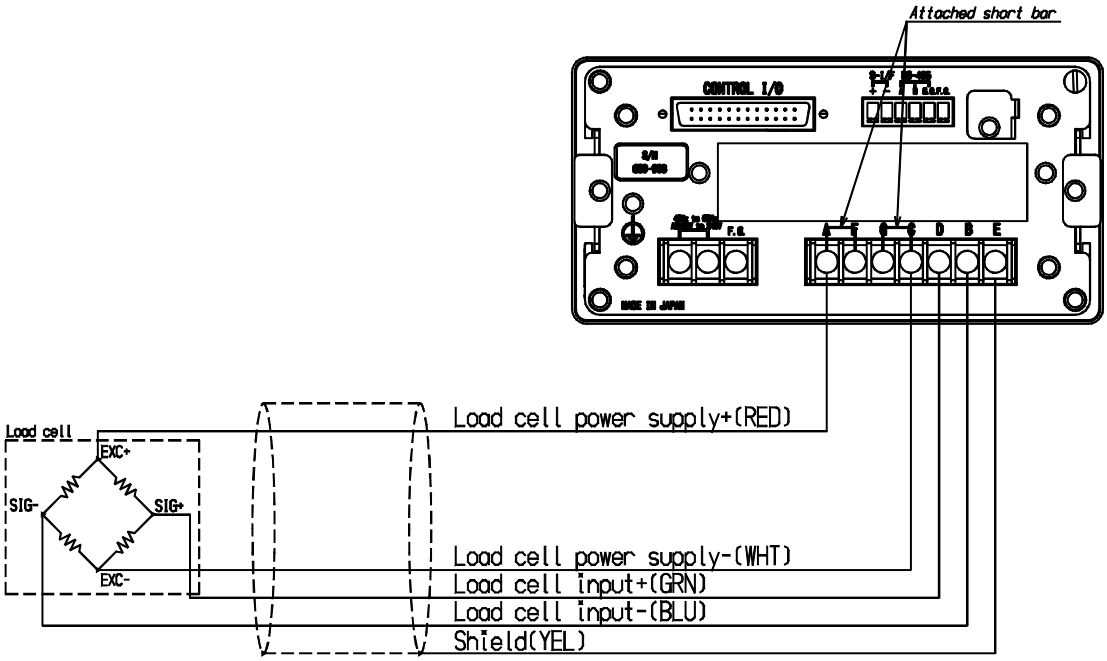

- **As using the 4-wire cable, shorten the load cell terminals A - F and C - G with the attached short bar. CSD-903 does not work in normal operation when the terminal F and G is in the open status.**
- **When the length of CAB-502 (our standard cable) is more than 30 m totally, there may have the case that the accuracy is out of warranty due to the resistance of cable, the input voltage of the instrument will be decreased.**

(3) Case connection of the load cells in parallel

The hopper scale, the track scale, etc, have the case to connect with several pieces of the load cells in parallel. The parallel connections can be easily executed by using optional SB-310 and SB-320 (Summing type junction box).

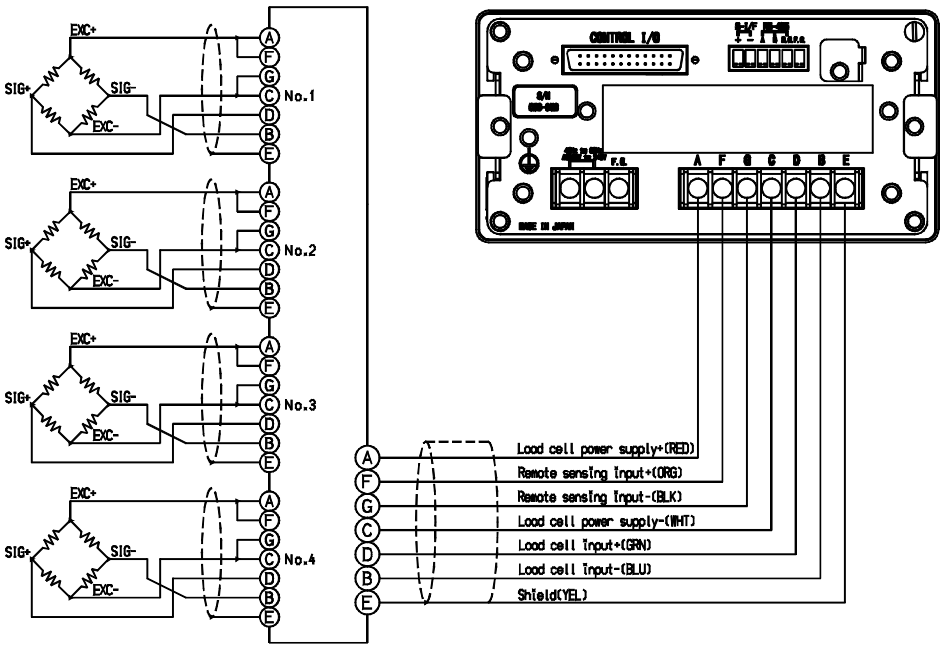

CSD-903 can make up to 6 parallel connections when the load cell is 350 ohm type. Please consult us as for a method over 5 parallel connections.

(4) Connecting with load cell, Junction box B-304B for extension, and CSD-903

1) When you use CAB-502 (4 core cable)

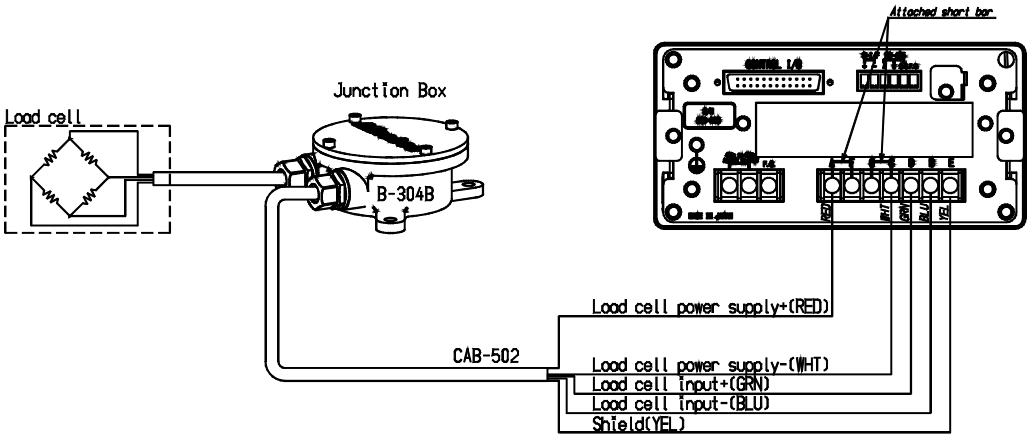

- **When you use it with 4 wires method, be sure to make a short-circuited between A-F and between C-G of the load cell terminal board. When terminal F and terminal G are used with opening status, CSD-903 cannot make normal operation.**
- **There is the possibility of the descent of the input voltage of the instrument at the time of total 30m or more in length of CAB-502 (our standard cable) and also the possibility of outside of accuracy due to the resistance of the cable.**

B-304B internal terminal connection

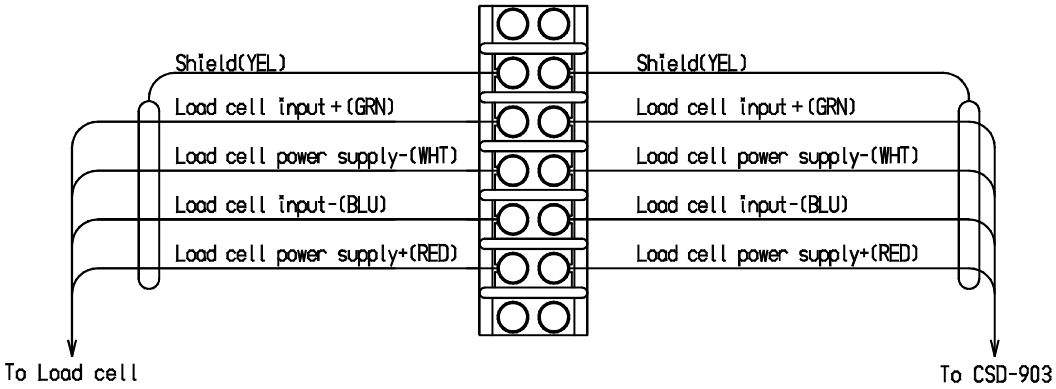

2) When you use CAB-501(6 core cable)

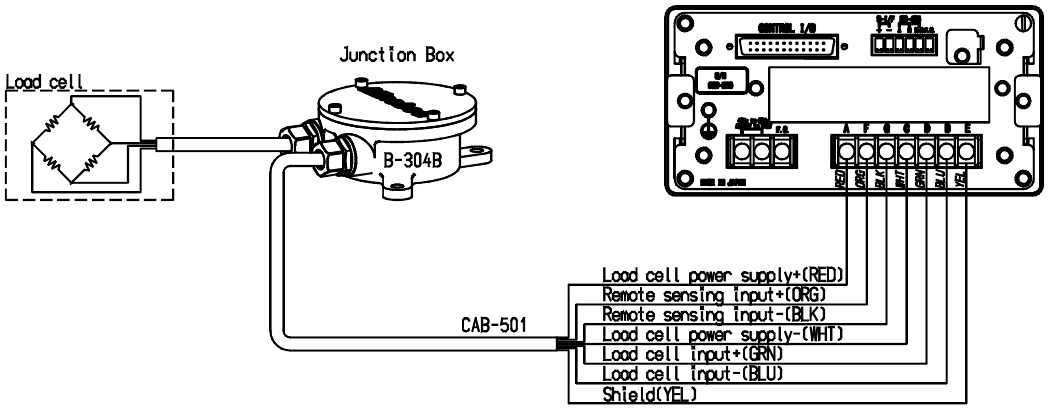

The remote sensing function of the instrument does not function enough due to the resistance of the cable at the time of total 100m or more in length of CAB-501 (our standard cable), and there may have the possibility of outside the accuracy guarantee.

B-304B internal terminal connection chart

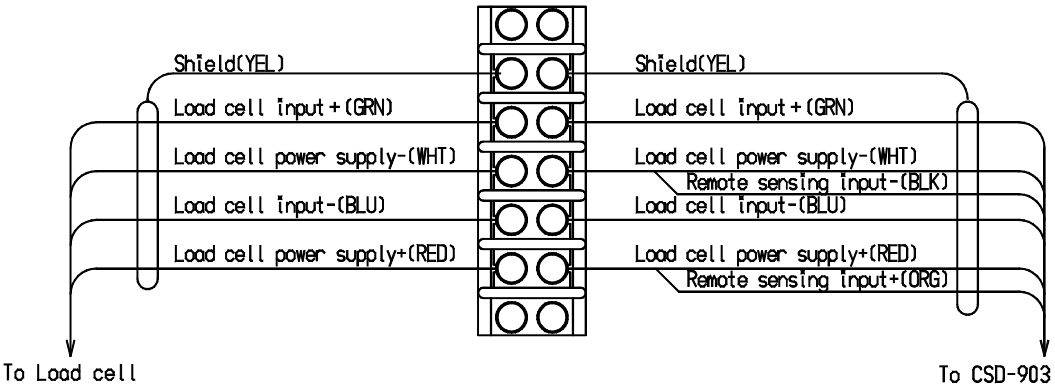

2-3. Connection of external control I/O

The function can be controlled from the outside with the external control I/O connector on the rear panel.

The external control input is executed by shortening each input and COM.1 with a contact point or open collector after wiring the connector.

The external control output is executed by open collector output.

(Open collector rated: V_{CE} = DC35 V, I_C = DC40 mA at maximum.)

The right figure is an external control I/O connector.

The upper line from A1 to A9 is for input signal, and the lower line from B1 to B12 and A12 is for output signal.

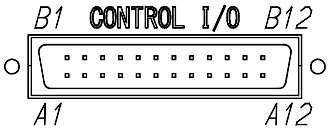

(1) Connection for input

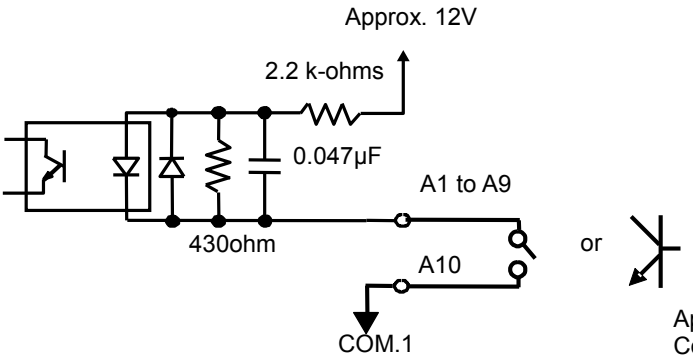

A1	Input1
A2	Input2
A3	Input3
A4	Input4
A5	Input5
A6	Input6
A7	Input7
A8	Input8
A9	Input9
A10	COM. 1

Applicable connector :
Connector FCN-361J024-AU,
Connector cover FCN-360C024-B (made by Fujitsu)

- **There are a pulse input and a level input in the recognition of the external control input signal depending on setting items.**
- **Refer to [8-14-1.Seting method of the external control input] for the details.**
- **The common of the external control input and the common of the 2 wire serial interface circuit are common.**

(2) Connection for output

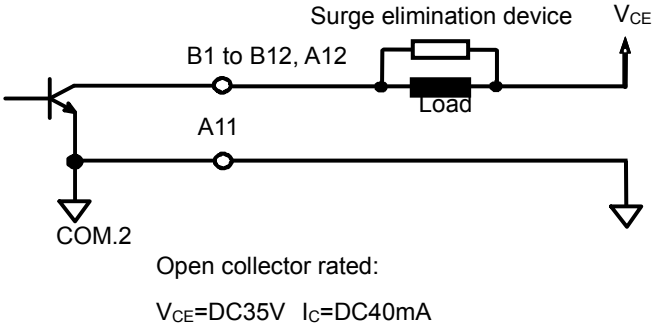

B1	Output1
B2	Output2
B3	Output3
B4	Output4
B5	Output5
B6	Output6
B7	Output7
B8	Output8
B9	Output9
B10	Output10
B11	Output11
B12	Output12
A12	Output13
A11	COM. 2

- **The common of the external control output is insulated from the other commons.**
- **Refer to [8-14-2. Setting method of the external control output] for the details.**
- **Connect a suitable serge elimination device for load for protection from external control output.**

2-4. Connection of standard RS-485 interface

Connect with A, B and S.G. on the output terminals for RS-485 interface and the 2 wire serial interface showing as below figure. Refer to [14-4.Connecting method] as to the connection.

With the standard RS-485, either the command mode or the protocol conforming to the Modbus is selectable.

(Refer to [15.Modbus communication] as to the Modbus communication.)

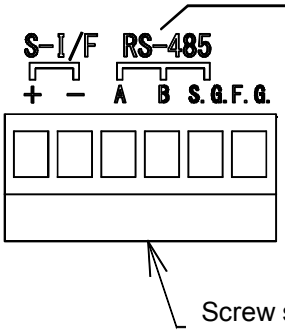

A	Differential I/O (＋)
B	Differential I/O (－)
S.G.	Signal ground

Applicable Plug : XW4B-06B-H1.made by OMRON.

- **Stripped length of electrical cable tip is 7 mm.**
- **The tightening torque of terminal screws on the terminal block is 0.6 N·m.**
- **Please use AWG28 ~ AWG16 for connecting cable.**
- **The signal ground of standard RS-485 interface and internal common are connected.**
- **Please connect the shield with F.G. terminal of RS-485 interface / 2-wires method serial interface terminal by using the shielded cable when CSD-903 complies with the CE conformity or applied JIS standard.**

2-5. Connection with 2-wires Serial interface

This is the 2-wires method serial interface to connect with a printer, an external display unit, etc.
The 2-wires serial interface is connected with +, - and F.G. shown in the below figure.

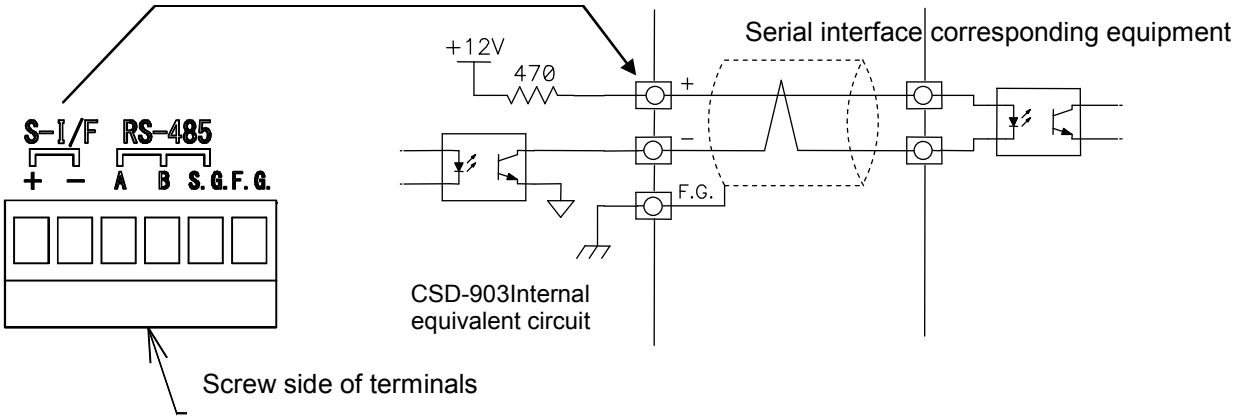

Applicable plug : XW4B-06B-H1 (made by OMRON)

- **Stripped length of electrical cable tip is 7 mm.**
- **The tightening torque of terminal screws on the terminal block is 0.6 N·m.**
- **Please use AWG28 ~ AWG16 for connecting cable.**
- **There are M252B, etc., made by UNIPULSE as the equipment for the 2-wires method serial interface.**
- **The cable must use two cores shielded cable as much as possible and connect the shield with F.G. terminal. Please twist the cable when you don't use the shielded cable.**
  (The applicable cable length is up to 100 m with shield, and up to 20 m without shield.)
- **The equipment for 2-wires method serial interface can be connected up to three in parallel.**
  (Maximum output current : Approx. DC20 mA)
- **The commons of the external control input and the 2-wires method serial interface are connected.**
- **This internal circuit and photocoupler are insulated.**
- **Please connect the shield with F.G. terminal of RS-485 interface/2-wires method serial interface terminal by using the shielded cable when CSD-903 complies with the CE conformity or applied JIS standard.**

2-6. Connection with power supply and ground

Connect the power supply with the power supply terminal board on the rear panel of the instrument shown as below figure.

Grounding should be the D class with the single earth.

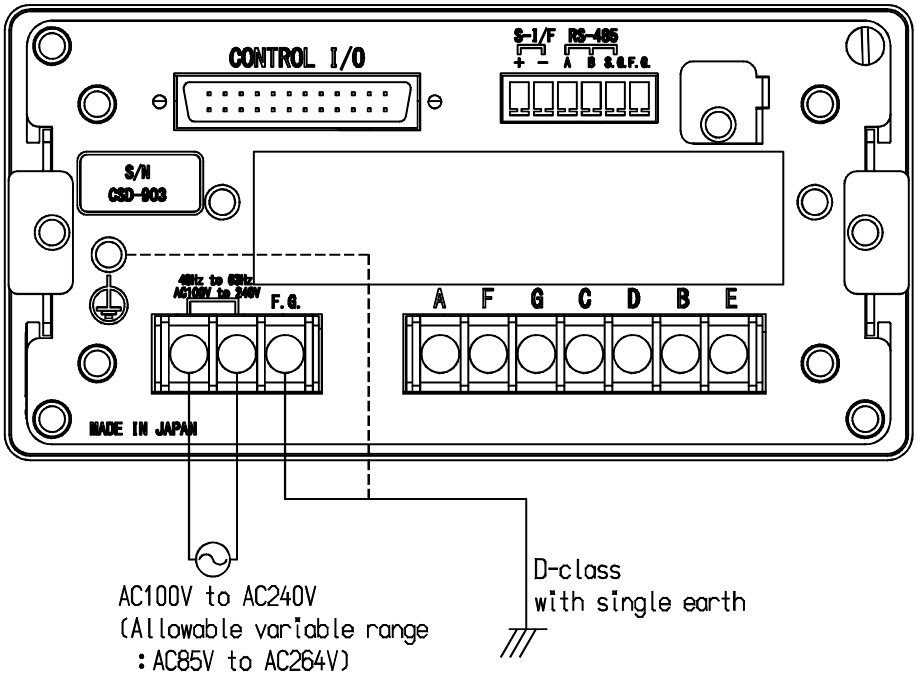

Warning

Connection with the power supply and the earth should be made surely according to the figures, and also within the specified power supply condition.

- **The grounding of the instrument should be the D-class with single earth.**
  It may cause an unexpected malfunction due to the effects of noise from other equipments.
- **When suiting the instrument with the CE conformity standard or JIS standard, please make the single earth with a protective ground terminal.**

3. Operation

3-1. Changeover of mode

This unit has various modes according to the operating situation.
Change the mode by the key operation.

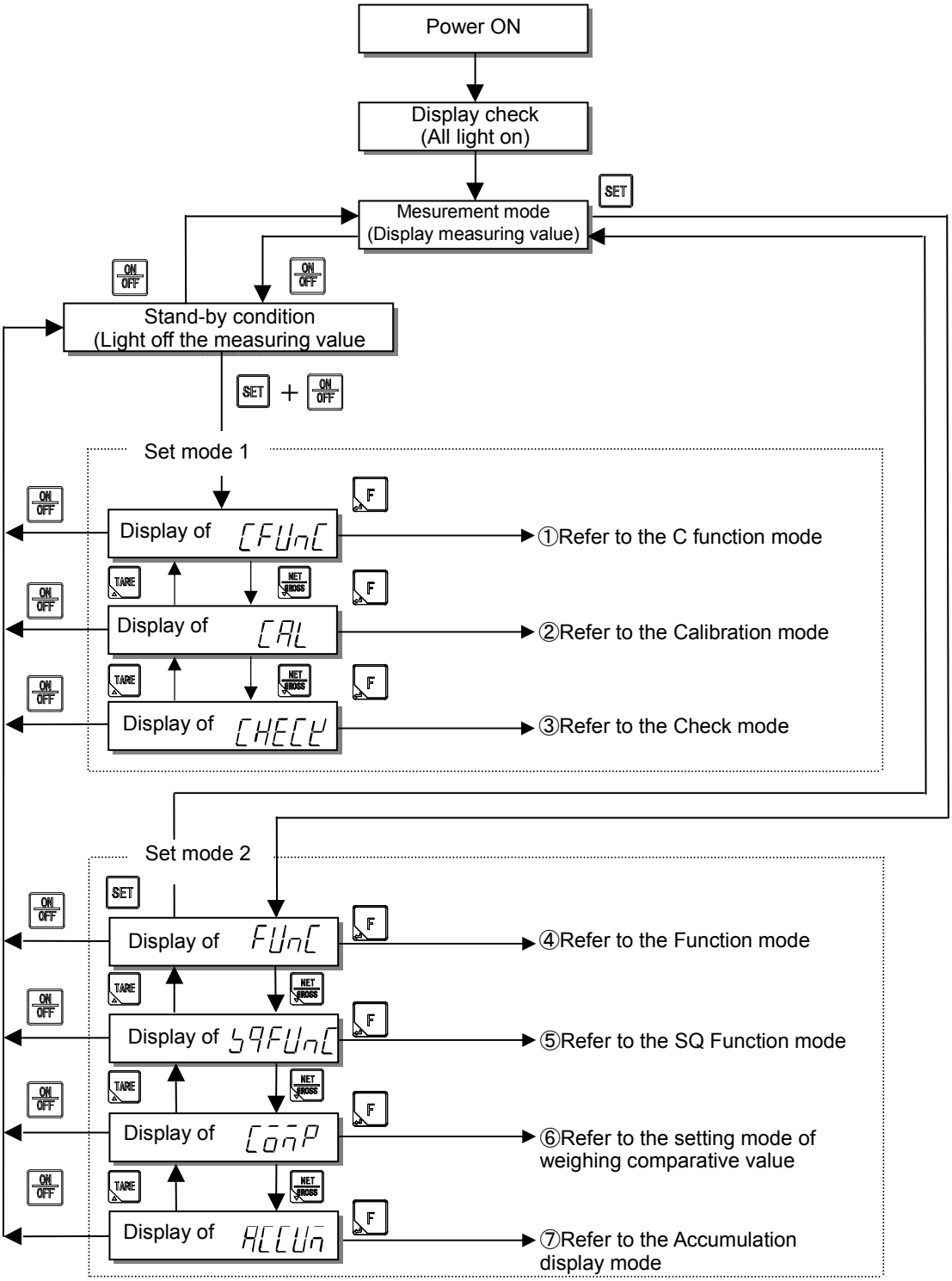

When the load cell output exceeds ±10 % of weighing capacity in the condition that power-on-zero is valid after checking the display, the display becomes the error indication of [------]. At this time, if the SET key is pressed, the display compulsorily becomes a load display. Refer to the paragraph [6-8. Power on zero].

(1) C function mode (CFUnC)
Various functions which relate to calibration by setting C function data become effective.

(2) Calibration mode (CAL)
By setting the calibration data, the calibration is executed to display the electric signal from the measuring section (load cell) as an accurate load.

(3) Check mode (CHECK)
The ROM version, the each input/output operation, the monitor of load cell output value, the BCD output and the analog output can be confirmed by the check mode.

(4) Function mode (FUnC)
Various functions become effective because of setting the function data.

(5) SQ function mode (SQFUnC)
The setting of SQ function data makes various functions related to the sequence operation effective.

(6) Weighing comparative mode (CoMP)
Execute the setting of comparison value of various weighing in the sequence weighing and comparison operation.

(7) Accumulation display mode (ACCUn)
The accumulation value and accumulation times can be confirmed for each brand.
Pressing the ZERO key clears the accumulation value and accumulation times displayed.

4. Calibration

To be able to display the electrical signal from the measuring section (load cell) as an accurate weight, the operation to match the display of the instrument with the weight loaded on the measuring section is called a calibration.

For example to adjust the display of this instrument to 100.00 accurately when the weight of 100 kg is loaded on the measuring section is said.

4-1. Set items required in the calibration

(1) Scale interval (d-01, 02, 05, 10, 20, 50)

It is the minimum unit of the measuring value the value to be set is [1], [2], [5], [10], [20] or [50].

The value of {Weighing capacity/Scale interval} is the display resolution.

(2) Weighing capacity (dCSP)

It is the maximum weight to be able to measure by the measuring section (load cell).

(3) Mass of weight used at the span calibration (LoAd)

The span calibration can be executed with the arbitrary weight. The same setting as the weighing capacity is executed when there is a weight for weighing capacity.

Please give setting here as 2/3 or more of weighing capacity to reduce the calibration error.

(4) Calibration at zero (ZEro)

It is a procedure of the calibration to become the zero point of the measurement when nothing is put on the measuring section (status of an initial load). There are [Method by the weighing data (status of an initial load)] and [Method by a numeric input of the load cell output voltage] as a calibration method.

(5) Calibration at span (SPAn)

It is a procedure by which execute the calibration of the change in the electric signal of the load cell when the weight is put on the measuring section to become the display of a correct weighing value.

There are [Method with weight] and [Method by a numeric input of the load cell output voltage] as a calibration method.

4-2. Procedure set if necessary after calibration

(1) Display position of decimal point (C function : CF-01)

The decimal point is put on the load display of this unit.

(2) Unit (C function : CF-05)

The unit is put on the load display of this unit.

(3) Digital linearize (Lnt)

It is a function the compensation of three points or less except the zero and span, and to reduce the measurement error. Refer to the paragraph 4-5. Digital linearization.

(4) Automatic range switch (C function : CF-40~ CF-44)

It is the setting of the second range or the third range for [Multi scale interval scale]. The boundary value and the scale interval within the each range are set. Refer to the [6-13.Automatic range switch].

(5) Gravity acceleration compensation (C function: CF-25, CF-26)

It is a function for the compensation of the span error by setting the gravity acceleration of the two different districts with a calibration place and a place to be used. Refer to [6-11.Gravity acceleration compensation].

- **Please execute the calibration if necessary when the environment to be used changes.**
- **The display resolution that the performance becomes effective is 10 000 or less.**
  The display resolution is a value into which weighing capacity is divided by the scale interval of the first range.
- **The mass of the weight used in the span calibration must use the one of 2/3 or more of weighing capacity to reduce the calibration error.**

4-3. Calibration procedures

4-3-1. Flow of calibration

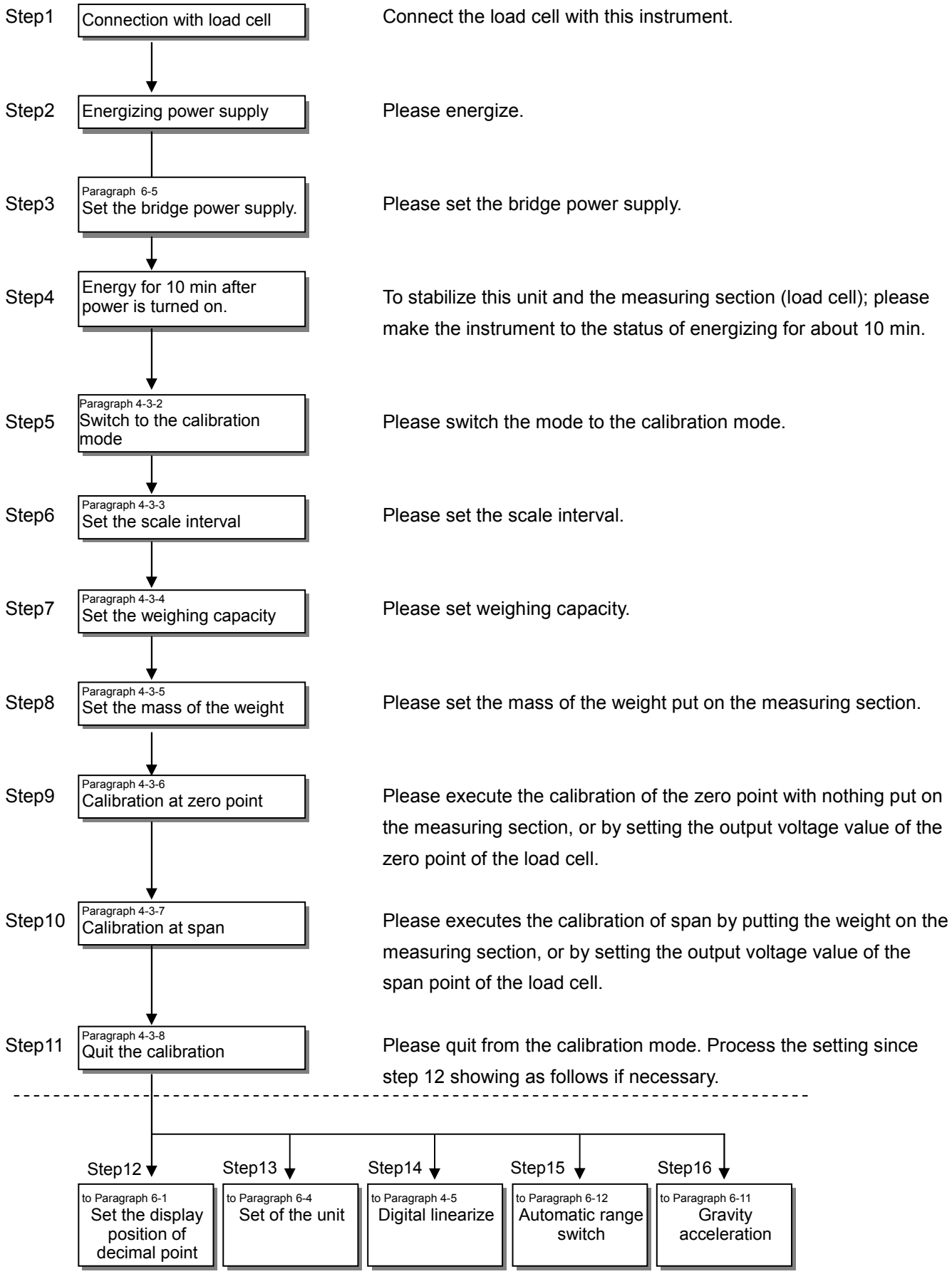

4-3-2. Switch to the calibration mode

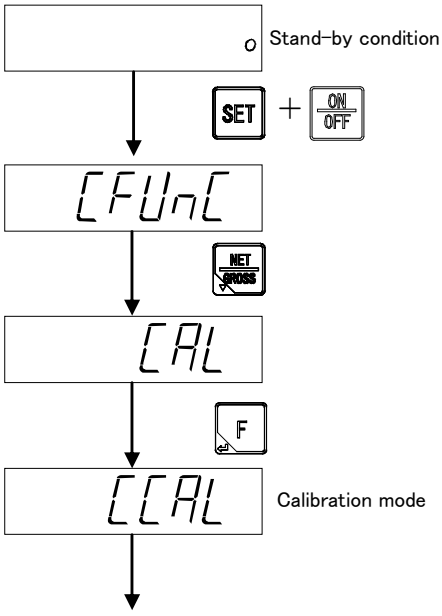

Move to the setting of the scale interval.

Change from the standard measurement mode to the stand-by condition by the ON OFF key.
Pressing the ON OFF key with the SET key pressed, it displays CFUnC.
Press the NET GROSS key here.

CAL displays.
Press the F here.

CCAL displays and it enters into the calibration mode.

4-3-3. Set of the scale interval

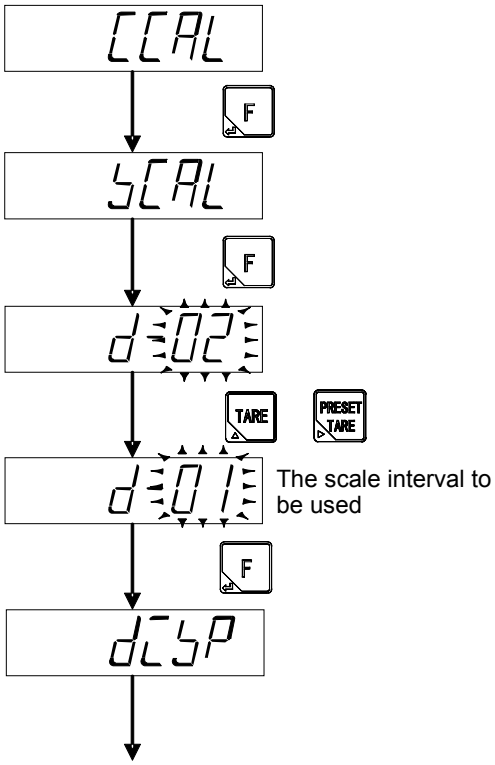

Move to set weighing capacity

When F key is pressed twice from CCAL display, 0 - ** is displayed.
[**] is the scale interval being memorized now.

Please select the scale interval from 1, 2, 5, 10, 20 or 50.

TARE NET GROSS: Selects the scale interval.

SET: Setting is interrupted and returns to CCAL display.

F: The displayed value is memorized, and proceed to the next step.

Press the F key after the set.

4-3-4. Set weighing capacity

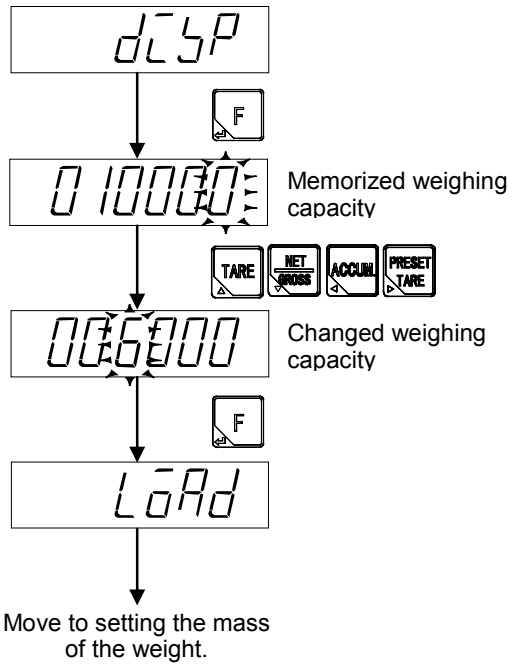

When F key is pressed from dCSP display, 010000 is displayed.

When the weighing capacity has already been changed, the weighing capacity being memorized now is displayed.
Here, please set the weighing capacity.

TARE NET GROSS : The value of changed digit is changed.
ACCUM. PRESET TARE : Changed digit is selected.
ZERO : The value is changed to [0].
SET : Setting is interrupted and display returns to CCAL.
F : The display value is memorized, and it proceed to the next step.

After the setting, press the F key.

4-3-5. Setting the mass of the weight

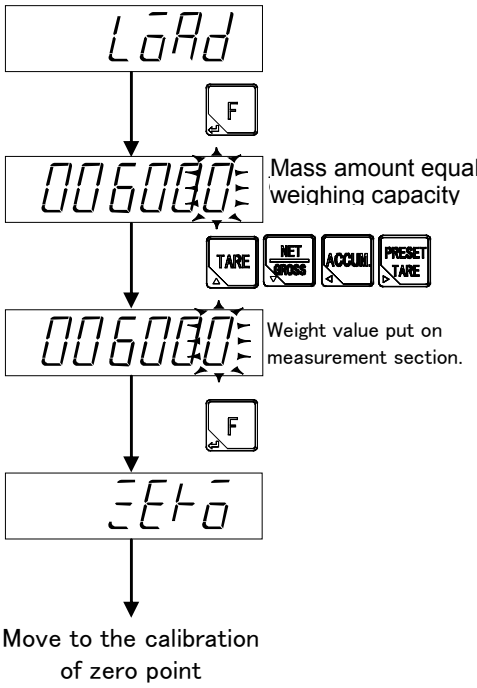

When F key is pressed from LoAd display **** is displayed.
[****] is the amount of weighing capacity.

Please set the mass of the weight actually put on the measuring section here.
The same setting as the weighing vcapacity is executed when there is a weight for weighing capacity.

TARE NET GROSS : The value of changed digit is changed.
ACCUM. PRESET TARE : Changed digit is selected.
ZERO : The value is changed to [0].
SET : Setting is interrupted and display returns to CCAL.
F : The display value is memorized, and it proceed to the next step.

After the setting, press the F key.

4-3-6. Calibration of zero point

When the zero calibration starts, [ZERO] is displayed.
Please select the zero calibration method.

(1) Method by the measuring data (status of initial load) ⇒ Press the [F] key, and execute the operation of a).
Execute the calibration of zero with nothing put on the measuring section.

(2) Method by the numeric input of the load cell output voltage. ⇒ Press the [PRESET TARE] key, and execute the operation of b).
Execute the calibration of zero with inputting the output voltage value of the load cell when nothing is put on the measuring section.

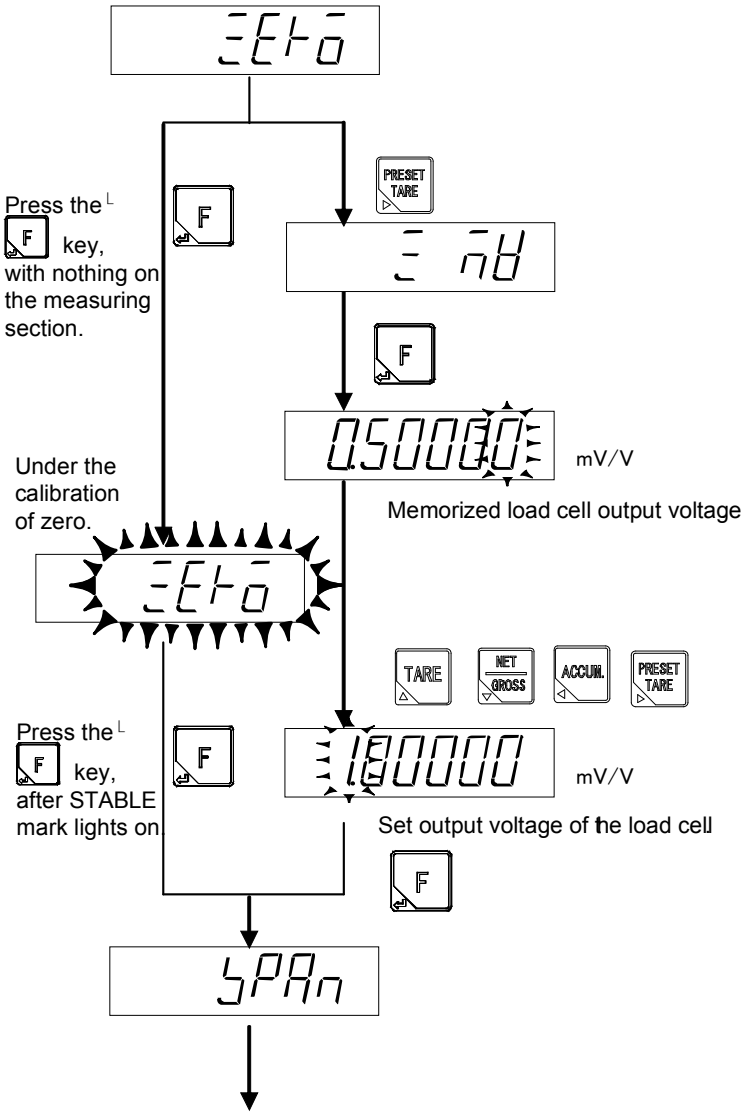

Move to the calibration of span.

a) Method by the measuring data (status of initial load)
Please make that nothing is put on the measuring section.

Press the [F] key when [ZERO] display blinks, and the STABLE mark lights. The zero point is memorized, and [SPAN] is displayed.

b) Method by the numeric input of load cell output voltage.

When key [PRESET TARE] setting is pressed, [STAB] is displayed, and when [F] key is pressed, [*.*****] is displayed also. [*.*****] is the memorized output voltage of the load cell. Please set the load cell output voltage in mV/V scale which correspond to the zero point of the measurement.

[TARE] [NET GROSS]: The value of changed digit is changed.

[ACCUM] [PRESET TARE]: Changed digit is selected.

[ZERO]: The displayed value is changed to [0].

[SET]: Setting is interrupted and display returns to CCAL.

[F]: The display value is memorized, and it proceed to the next step.

After the setting, press the [F] key.

Error display in the calibration of zero point

[rE-L] : The display blinks for about two seconds when the output of the load cell is -2.5 mV/V or less. (Refer to the paragraph 19. Error display)

[rE-H] : The display blinks for about two seconds when the output of the load cell is 2.5 mV/V or more. (Refer to the paragraph 19. Error display)

4-3-7. Calibration of span

When the span calibration starts, SPAn is displayed.
Please select the span calibration method.

(1) Method by the measuring ⇒ data Press the F key, and execute the operation of a).
Execute the span calibration with weight put on the measuring section.

(2) Method by the numeric output of the load cell output ⇒Press the PRESET TARE key, and execute the operation b).
Execute the span calibration by inputting the value which subtracts the output voltage of the load cell to zero point of measurement set in paragraph 4-3-6. From the output voltage corresponding to the mass of the weight set in paragraph 4-3-5.

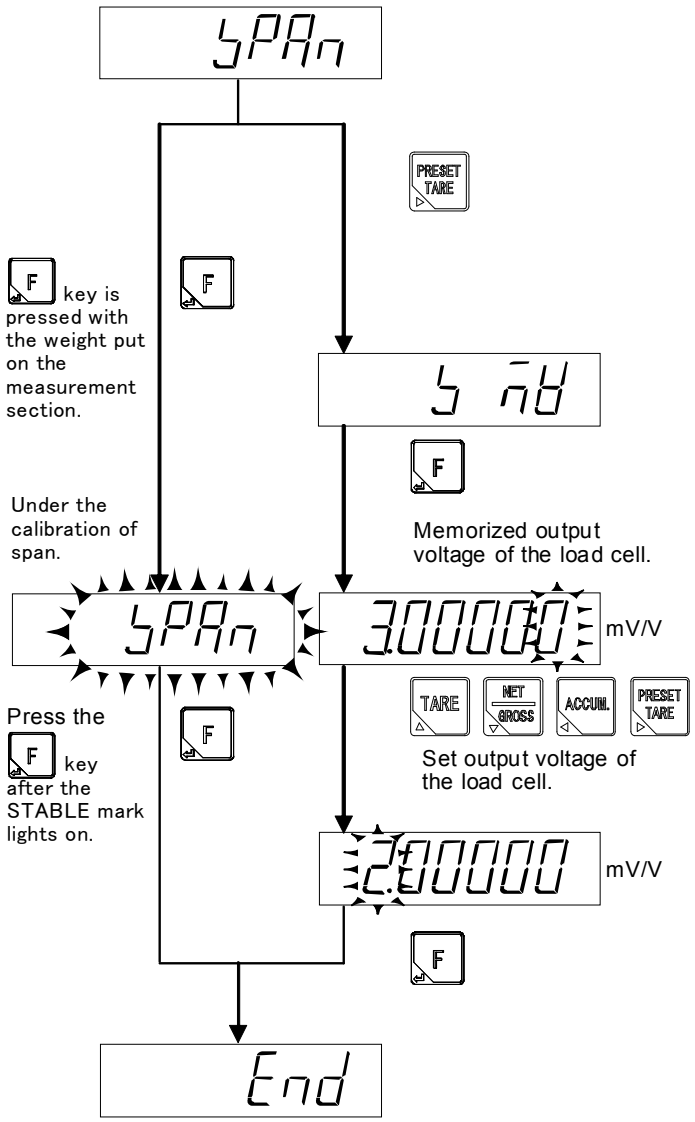

a) Method with weight
Please put the weight corresponds to mass set in the paragraph 4-3-5 on the measuring section.

Please press the F key when SPAn display blinks, and the STABLE mark lights. Span is memorized and End is displayed.

b) Method by the numeric input of load cell output voltage.

When PRESET TARE key is pressed, 5 nU is displayed, and when F key is pressed, *.***** is displayed also.
[*.*****] is the memorized output voltage of the load cell. Please set the value in mV/V scale which subtracts the output voltage of the load cell to zero point of measurement from the output voltage corresponding to the mass of the weighing capacity.

TARE NET GROSS: The value of changed digit is changed.

ACCUM. PRESET TARE: Changed digit is selected.

ZERO: The displayed value is changed to zero.

SET: Setting is interrupted and display returns to CCAL.

F: The display value is memorized, and it proceeds to the next step.

After the setting, press the F key.

Error display in the calibration of span

SP-L : The display blinks for about two seconds when ([Load cell output voltage at span]－[Load cell output voltage at zero point]) ≦ 0.0 mV/V.
(Refer to the paragraph 19. Error display)

SP-H : The display blinks for about two seconds when load cell output is 3.1 mV/V or more.
(Refer to the paragraph 19. Error display)

4-3-8. Quit the calibration

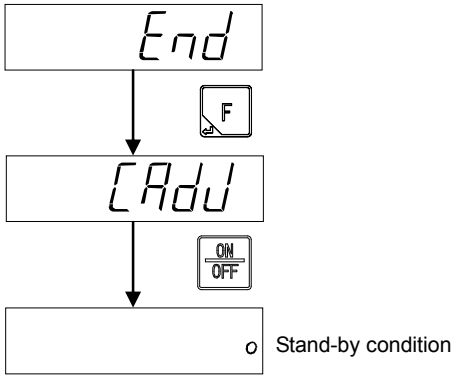

End is displayed when span calibration is completed.

Press the F key to quit the calibration mode.

The display becomes CAdJ, and the set data is memorized internally.

Press the ON/OFF to set to the stand-by condition.
The calibration mode is completed.

Please set the fine adjustment of ZERO and SPAN, digital linearize, ZERO set and Tare weight cancellation after the finish of calibration. Those data is cleared if you process the calibration again.

4-4. Fine adjustment of zero and span

It is the function to make the fine adjustment of zero and span when there is a difference between the actual measuring value and the weight.

4-4-1. Changeover to zero and span fine adjustment mode

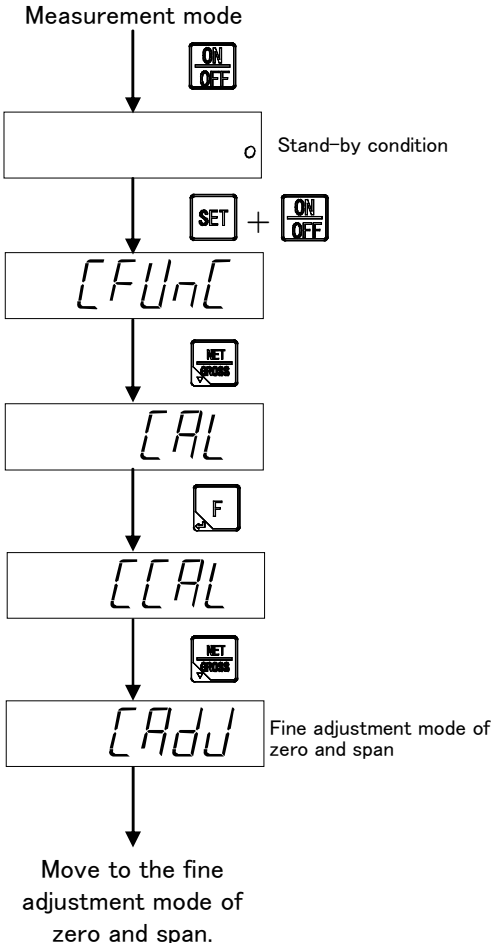

Press the ON OFF key, and move from a usual measurement mode to the stand-by condition.

When ON OFF key is pressed with SET key, CFUnC is displayed.

Press the key NET GROSS here.

CAL is displayed, then F key is pressed.

CCAL is displayed.

By pressing the NET GROSS key, CAdJ is displayed, then it enters into the fine adjustment mode of zero and span.

4-4-2. Fine adjustment of zero and span

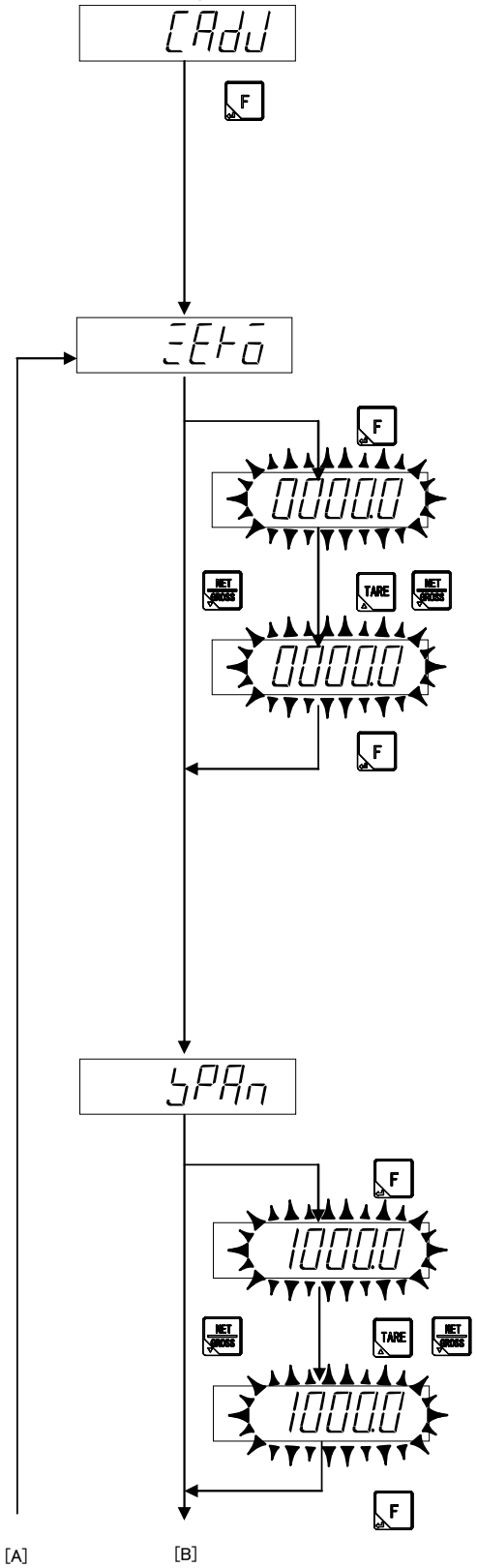

When F key pressed from CAdJ display, ZEro is displayed.
In executing the zero fine adjustment, proceeds the operation of a).

In case of executing the span adjustment only, press NET GROSS key, and proceed the operation of b) after displaying SPAn.

a) Fine adjustment of Zero

Press the F key. Display becomes ****.*.
[****.*] is the present measuring value, and it can be displayed up to 1/10 digit.
Ex. Without a decimal point 0 ~ 6000 -> 0.0 ~ 6000.0
With a decimal point 0.0 ~ 600.0 -> 0.00 ~ 600.00
Please set the display to [zero] after the condition which nothing is put on the measuring point.

TARE : Increase the measuring value.
Increase continuously by keeping the key pressed.

NET GROSS : Decrease the measuring value.
Decrease continuously by keeping the key pressed.

SET : Interrupts the setting, and returns to CAdJ display.

F : Memorizes the display value, and proceed to the next step.

After the zero fine adjustment, press the F key.
Display becomes SPAn. in case of executing the fine adjustment of span, precedes the operation of b).

Otherwise, press the NET GROSS key, and proceed the operation of c) after displaying End.

b) Fine adjustment of span

Put the weight which can be put on the measuring section under the weighing capacity.

****.* is displayed by pressing the F key.
[****.*] is the present measuring value, and it can be displayed up to 1/10 digit.
Please set the display to become the same value with the weight put on the measuring section.
After the fine adjustment of span, proceeds the operation of c) after the End display by pressing F key.

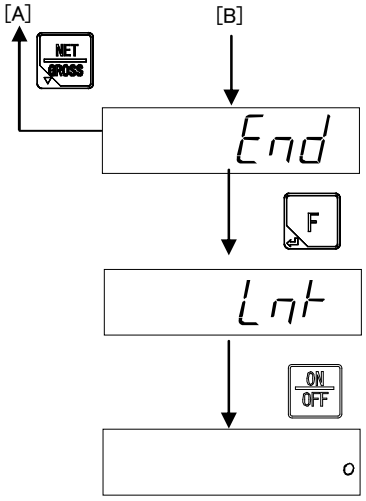

c) End of fine adjustment mode

Press the F key to quit the fine adjustment mode of zero and span.

Lnt displayed, and the setting data is memorized to the internal memory.

Press the ON/OFF key, and move to the stand-by condition.
The fine adjustment mode of zero and span is completed.

4-5. Digital linearize.

After the calibration, the measurement error of some scale interval levels might be caused between the zero and span (weighing capacity) by the influence of the measuring section etc.

The digital linearization function executes the compensation of three points or less except the zero and span, and to reduce the measurement error.

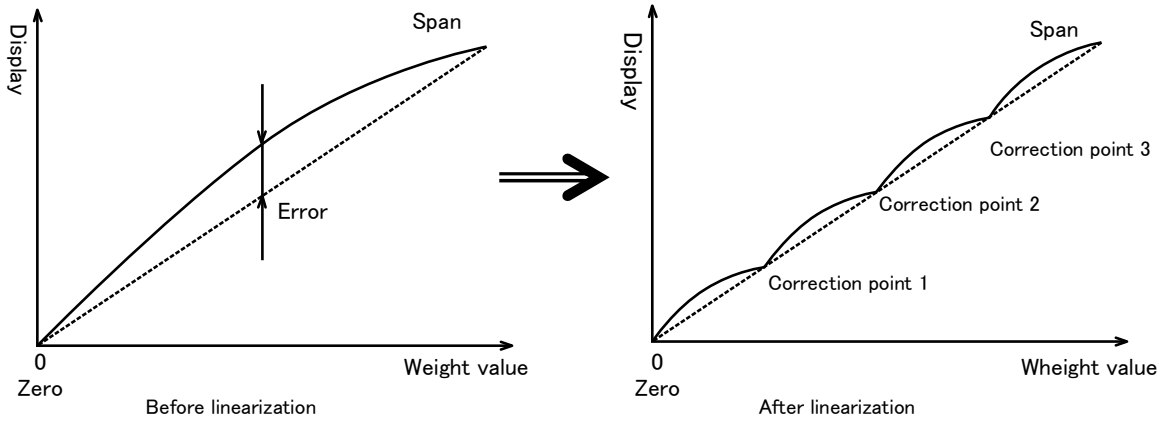

4-5-1. Changeover to digital linearization mode

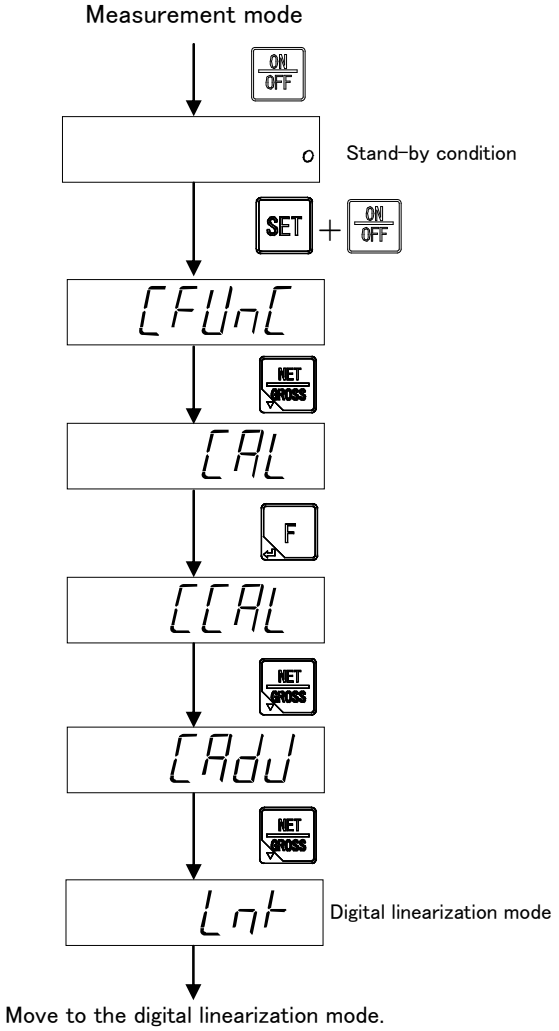

Make the condition from the normal measurement mode to the stand-by condition by pressing the ON OFF key.

Press the ON OFF key with pressing the SET key, CFUnC is displayed.

Press the F key after pressing the NET GROSS key , CCAL is displayed.

Lnt is displayed after pressing the NET GROSS key twice, and enter into the digital linearization mode.

4-5-2. Setting of the digital linearization

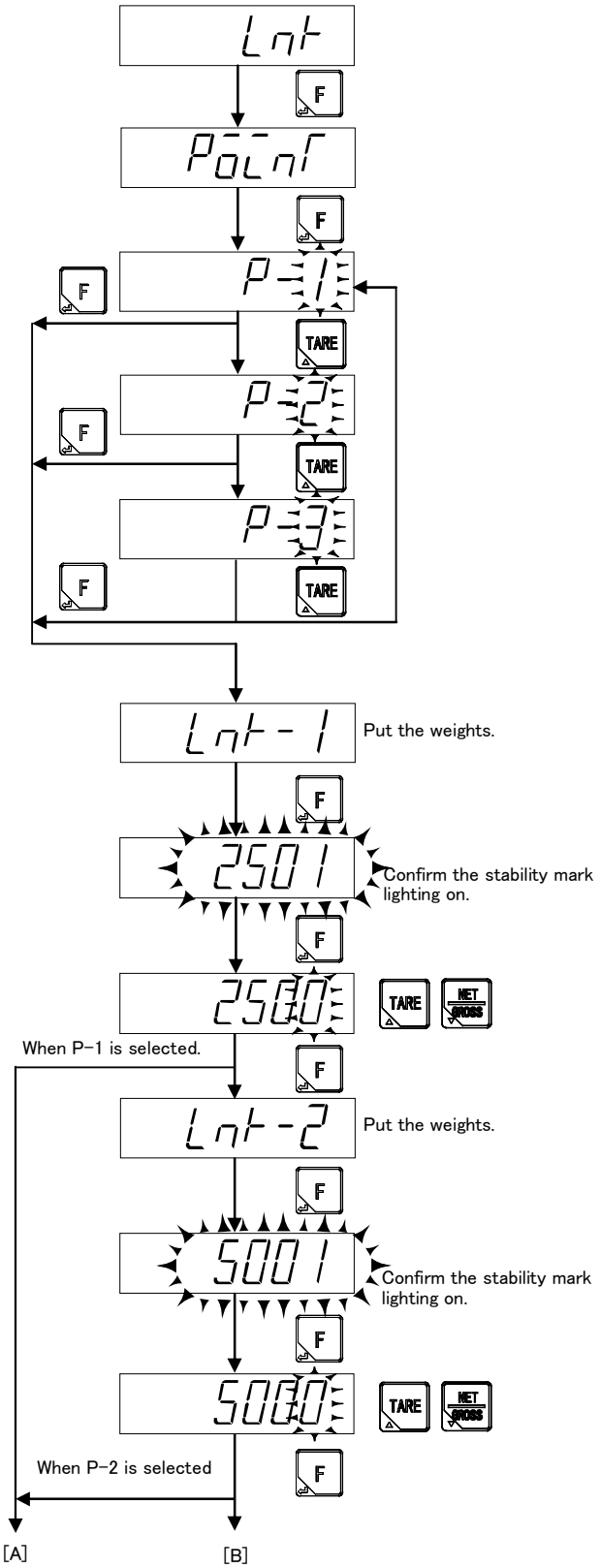

By pressing the F key twice from Lnt display, P-1 is displayed. As the display Becomes P-2 → P-3 by pressing the TARE key, please select the numbers of points which wants to compensate linearization, and press the F key

P-1 : compensation by 1 point
P-2 : compensation by 2 point
P-3 : compensation by 3 point

Please put the weight of the point which should be the compensation after the display becomes Lnt-1 on the measuring section and press the F key.

As the measuring value blinks, press the F key after confirming the stability mark (▼) lighting on.
As the 100 digit of the measuring value blinks, set to the same value with the weights put on the measuring section.

TARE :Increase the measuring value.

NET GROSS :Decrease the measuring value.

F :The displayed value is memorized, and proceed to the next step.

SET :The setting is interrupted, and return to the display of Lnt.

The display becomes Lnt-2 when P-2 is selected, and please execute the compensation of the second point.

Additionally, the display becomes Lnt-3 when P-3 is selected, and please execute the compensation of the third point.

Please make the value of weight as Lnt-1 < Lnt-2 < Lnt-3.

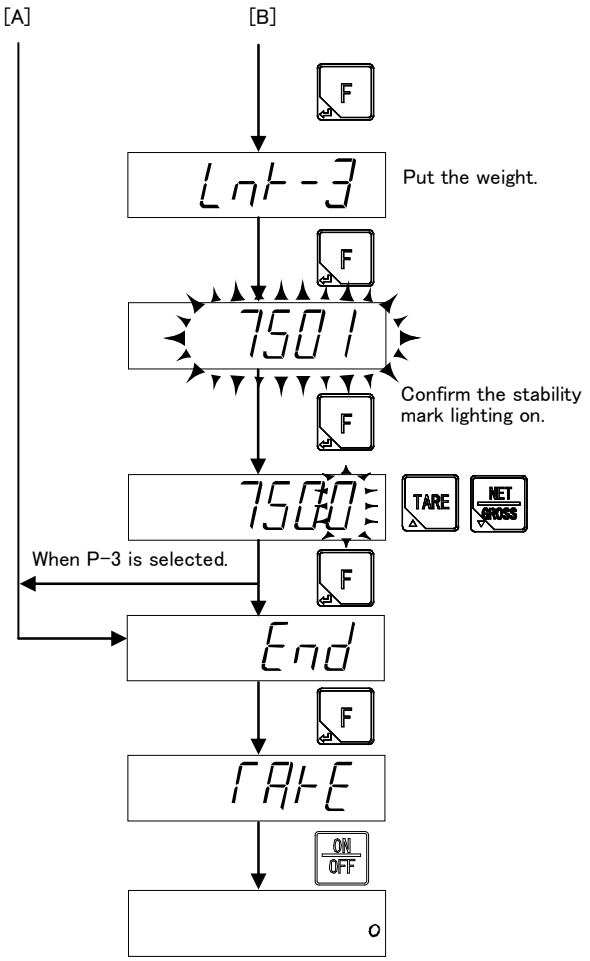

Please press the F key when the compensation of each point is completed.
End is displayed.

Press the F key to complete digital linearization mode.
rAtE is displayed, and the setting data is memorized in the internal memory.

Please set to the stand-by condition by pressing the ON OFF key.
The digital linearization mode is finished.

- **Please make the weights to be compensated as Lnt-1 < Lnt-2 < Lnt-3.**
- **The linearization compensation cannot be executed over the weighing capacity.**
- **Please refer [19-1. Error load display] as to the details of error display.**
- **The compensation data of the digital linearization can be cleared by C function CF-98. Please refer to the paragraph [6-15. Digital linearization clear].**

4-6. Calibration only of zero point

It is a function for the re-calibration only of the zero point when the amounts of the tare other than the weighing capacity of the measuring section are changed.

4-6-1. Changeover of the calibration mode by zero point

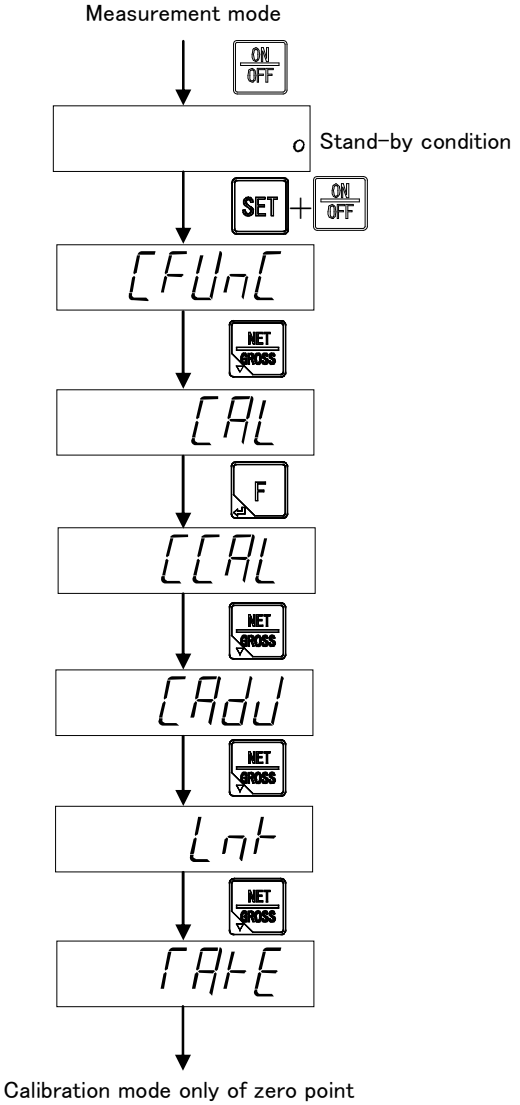

Press the ON OFF key to change from the measurement mode to the stand-by condition.

CFUnC is displayed when the ON OFF key is pressed with the SET key.

CCAL is displayed by pressing the F key after pressing the NET GROSS key.

rAtE is displayed after pressing the NET GROSS key at three times, and entered into the calibration mode only of the zero point.

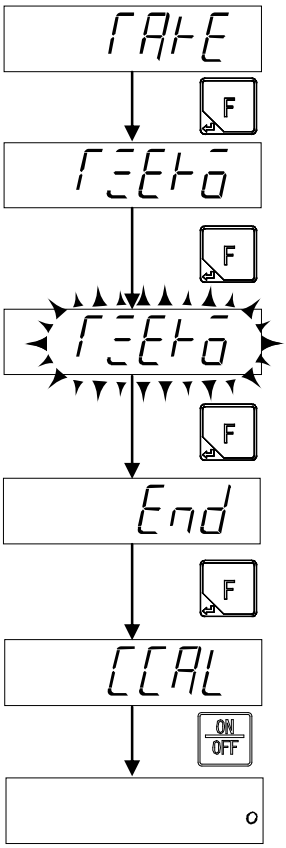

Calibration mode only of zero point

Please make the display to rZEro by pressing the F key from the display of rAtE.

Please make to the status where nothing is put on the measuring section here excluding the tare outside weighing capacity.

The display of rZEro blinks by pressing the F key, and start the calibration at zero.

Press the F key after the stability mark lighting on.

The calibration of zero point is completed, and End is displayed.

Press the F key to finish the calibration mode only of zero point.

CCAL is displayed, and the setting data is memorized in the internal memory.

Please set to the stand-by condition by pressing the ON OFF key.
The calibration mode only of zero point is finished.

Error display in the calibration of zero point

rE-L: The display blinks for about 2 seconds when the load cell output is less than -2.5 mV/V.
(Please refer to the paragraph 19. Error display.)

rE-H: The display blinks for about 2 seconds when the load cell output is over 2.5 mV/V.
(Please refer to the paragraph 19. Error display.)

4-7. LOCK of calibration

The function change in the calibration and C function can be prohibited by the switch of rear panel.

4-7-1. LOCK by the switch

There is calibration LOCK switch inside when the cover at the right of terminals of RS-485 interface and 2-wires type serial interface in the rear panel.

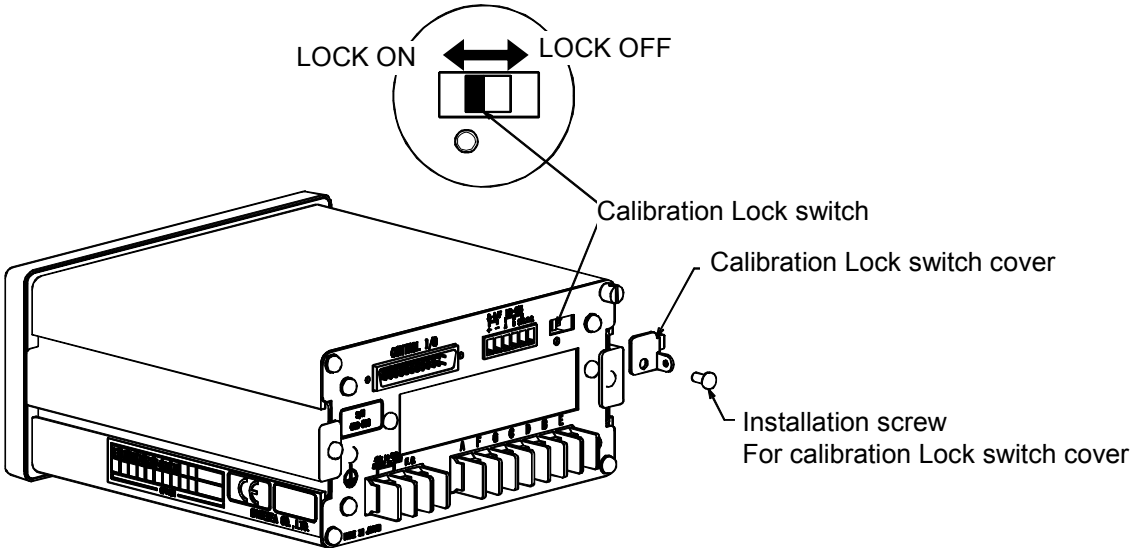

- **When the calibration LOCK is at the effective, the mode of [CFUnC] or [CAL] cannot be used.**
- **When the calibration LOCK is at the effective, the rewriting C function data by communication and the communication calibration is cannot.**

5. C function mode

The various functions concerning to the calibration become effective by setting the C function data.

5-1. Setting method of C function data

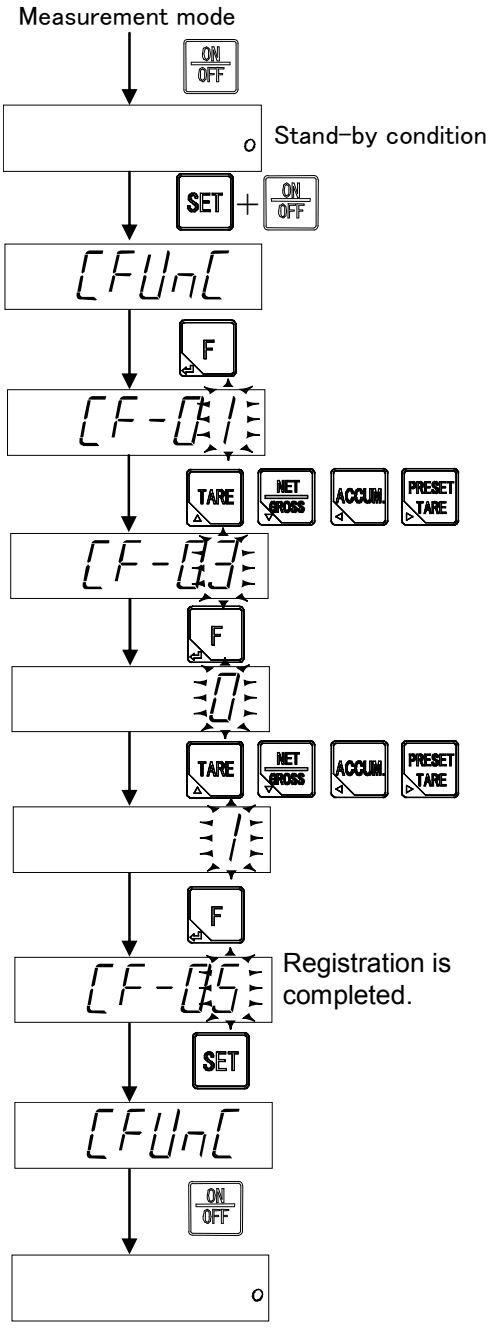

Press the ON OFF key to change the condition from normal measurement mode to stand-by condition.

When the ON OFF key is pressed with pressing the SET key, CFUnC is displayed.

By pressing the F key, CF-01 is displayed.
Please select C function number which wants to change.

TARE NET GROSS: The value of the changed digit is changed.

ACCUM. PRESET TARE: Select the changed digit.

ZERO : Change the display value to [0].

SET : Return to the display of CFUnC.

F : Memorize the display value, and proceed to the next step.

ON OFF : Finish the C function mode without changing all setting.

By pressing the F key, please change the setting value of selected C function mode.

By pressing the F key. The changed content is registered, and the following changed C function number is displayed on the panel.
Please select the changed C function number when you continuously change the setting of the other C function numbers.

By pressing SET key is pressed after the registration is completed, CFUnC is displayed.

By pressing the ON OFF key, set to the stand-by condition.

5-2. Function of C function data

Item	Function No.	Setting value	Contents
Display position of decimal point.	CF-01	●0	No decimal point
		1	1234.5
		2	123.45
		3	12.345
		4	1.2345
A/D sampling rate	CF-02	0	20 times/s
		●1	200 times/s
Condition of over display	CF-03	0	Bigger than |Weighing capacity ＋9D|
		1	Exceeding to the weighing capacity ±110%
		●2	Smaller than －20D and larger than weighing capacity ＋9D
Unit	CF-05	●0	No unit
		1	g
		2	kg
		3	t
		4	lb
		5	N
		6	kN
Excitation	CF-07	●0	DC10 V
		1	DC5 V
		2	DC2.5 V
Net weight sign inversion	CF-08	●0	Net weight sign not inverted
		1	Net weight sign inverted
Operating condition of zero set	CF-10	0	Operation when it is steady
		●1	Operation by unconditional
Effective range of zero set	CF-11	00 ~ 30	Unit : ±1 % of the weighing capacity
		●02	
Target of zero tracking	CF-12	0	Gross value and net value (for load display)
		●1	Gross value (only at gross value display)
Data width of zero tracking	CF-13	00 ~ 99	Unit : 0.1 D 00 : Zero tracking OFF
		●01	
Time width of zero tracking	CF-14	00 ~ 99	Unit : 0.1 s 00 : Zero tracking OFF
		●00	
Operation of power-on-zero	CF-15	●0	Invalid
		1	Valid
Operating condition of tare weight cancellation	CF-16	●0	Operation when it is steady and 0 < GROSS ≦ Weighing capacity
		1	Operate unconditionally and 0 < GROSS ≦ Weighing capacity
		2	Operation when it is steady and 0 < GROSS ≦ |Weighing capacity|
		3	Operate unconditionally and 0 < GROSS ≦ |Weighing capacity|
Change of data stored place	CF-17	●0	RAM
		1	EEPROM
Power on clear	CF-18	000～111 ●000	0 : Invalid 1 : Valid 10^1 digit : Data of tare weight cancellation 10^2 digit : Data of preset tare weight cancellation 10^3 digit : Data of zero set and zero tracking

●: Has been set as default

Item	Function No.	Setting value	Contents
Stability detection while the set mode 2 or set of preset tare	CF-20	●0	Invalid
		1	Effective
Unit display in sub- display section while the set mode 2 or set of preset tare	CF-21	●0	Invalid
		1	Effective
Method of setting gravity acceleration compensation	CF-25	●0	Set the district number
		1	Set the numerical value of gravity acceleration
District number of using place	CF-26 (Possible to set at CF25 = 0)	01 ~ 16	Unit : District
		●10	
District number of calibration place	CF-27 (Possible to set at CF25 = 0)	01 ~ 16	Unit : District
		●10	
Gravity acceleration value setting of using place	CF-28 (Possible to set at CF25 = 1)	9.000 ~ 9.999 ●9.797	Unit : m/s2
Gravity acceleration value setting of calibration place	CF-29 (Possible to set at CF25 = 1)	9.000 ~ 9.999 ●9.797	Unit : m/s2
Range switch operation	CF-40	●0	Range change OFF
		1	Changeable two ranges
		2	Changeable three ranges
Set of scale interval of the second range	CF-41	0	1 scale interval
		1	2 scale interval
		2	5 scale interval
		●3	10 scale interval
		4	20 scale interval
		5	50 scale interval
Boundary value setting in the second range	CF-42	000000 ~ 999999 ●003000	
Set of scale interval of the third range	CF-43	0	1 scale interval
		1	2 scale interval
		2	5 scale interval
		●3	10 scale interval
		4	20 scale interval
		5	50 scale interval
Boundary value setting in the third range	CF-44	000000 ~ 999999 ●006000	
Analog output target	CF-70	●0	Display interlock
		1	Gross value
		2	Net value
Display value at the analog output of DC4 mA(DC0 V)	CF-71	-999999 ~ 999999 ●000000	Unit : 1D
Display value at the analog output of DC20 mA(DC10 V)	CF-72	-999999 ~ 999999 ●010000	Unit : 1D
Calibration data of the maximum capacity (Reference use)	CF-90	●1	
Calibration data of weighing capacity (Reference use)	CF-91	●10000	

●Has been set as default

Item	Function No.	Setting value	Contents
Calibration data of the weight (Reference use)	CF-92	●10000	
Calibration data of zero mV/V (Reference use)	CF-93	●0.00000	
Calibration data of span mV/V (Reference use)	CF-94	●0.30000	
Stability detection time width at calibration	CF-97	00 ~ 99 ●05	Unit : 0.1 s 00 : OFF of stability detection at calibration
Digital linearization clear	CF-98		The data of the compensation by the digital linearization is cleared.
Memory clear	CF-99		C function set content is returned default setting.

●Has been set as default

6. Various functions by C function data

6-1. Setting of decimal point display position

The decimal point display position is selected by C function CF-01.
The position of the decimal point can be selected from [Nothing], [1234.5], [123.45], [12.345] or [1.2345].
Default is set to [Nothing].

6-2. A/D sampling rate

The A/D sampling rate is selected by C function CF-02
The A/D sampling rate can be selected from [200 times/s] or [20 times/s].
Default is set to [200 times/s].

The A/D sampling rate decreases temporarily while writing the changed data of set value in EEPROM.

6-3. Condition of over display (ōL or -ōL display)

The over display condition is selected by C function CF-03.
[At the time of more than |weighing capacity + 9D|], [at the time of exceeding to the weighing capacity ±110 %] or [Exceeding to -20D to weighing capacity] can be selected.
Default is set to [Smaller than -20D and larger than weighing capacity +9D].

6-4. Unit

The unit is selected by C function CF-05.
The unit can be selected from [No unit], [g], [kg], [t], [lb], [N] or [kN].
Default is set to [No unit].

6-5. Excitation

Excitation is selected by C function CF-07.
The voltage (DC) excited to the load cell can be selected from [DC10 V], [DC5 V] and [DC2.5 V].
Default is set to [DC10 V].

When CSD-903 is applied for the system where zener barrier is used, apply it by selecting the excitation properly according to the below table.

System configuration	Excitation		
	10 V	5 V	2.5 V
1 point of load cell + zener barrier	×	○	○
2 points of load cell + Summing type junction box + zener barrier	×	×	○
3 points of load cell + Summing type junction box + zener barrier	×	×	○
4 points of load cell + Summing type junction box + zener barrier	×	×	○
5 points of load cell + Summing type junction box + zener barrier	×	×	○
6 points of load cell + Summing type junction box + zener barrier	×	×	×

○ : Applicable. × : Not Applicable.

The above are the examples when CAB-501 (6-cores) type of cable and 350 Ω type of load cell are applied.

6-6. Net weight sign inversion

The net weight sign inversion function is used to invert the sign of the net weight display and net weight data output externally, for example, in simple comparison discharging mode.

The net weight sign inversion function is a function for making the net weight display or net weight data output externally positive by inverting the sign of the net weight using C function CF-08.

Net weight sign inversion can be selected from [Net weight sign not inverted] or [Net weight sign inverted].

Default is set to [Net weight sign not inverted].

6-7. Zero set

The zero set function memorizes a present measuring value as zero point and adjusts the display to zero by pressing the ZERO key when the indicated value of the load display section is the gross value and at the same time Zero set effective range.

6-7-1. Operating condition of zero set

The operating condition of zero set is selected by C function CF-10.

The effective range is common for both of zero set and zero tracking.

[Operation at steady] or [Unconditional operation] can be selected.

Default is set to [Operation at steady].

6-7-2. Zero set effective range

The effective range of zero set is selected by C function CF-11

Setting range: 00 – 30 Unit : ±1 % of the weighing capacity, 00: OFF

Default is set to [02].

- **When the zero compensation for the effective range is executed by the zero set and the zero tracking, the zero set is not accepted.**
- **When the tare weight cancellation or the preset tare weight cancellation is executed, zero set shall be executed after clearing the tare weight cancellation and the preset tare weight cancellation.**

6-8. Zero tracking

The function of zero tracking compensate the gradual zero drift in a constant condition and stabilize the zero point.

6-8-1. Target of zero tracking

The zero tracking target is selected by C function CF-12.

[Gross value or net value (for load display)] or [Gross value (only at gross value display)] can be selected. Default is set to [Gross value].

6-8-2. Zero tracking data width

The zero tracking data width is selected by C function CF-13.

Setting range : 00-99, Unit : 0.1 D, 00 : OFF

Default is set to [00].

6-8-3. Zero tracking time width

The zero tracking time width can be set by C-function CF-14.

Setting range : 00-99, Unit : 0.1 s, 00 : OFF

Default is set to [00].

Ex. The data width to which the zero tracking is executed by C function CF-13 is set.

The zero tracking data width for each set value [n] is obtained in the display conversion by the following expression.

[Zero tracking data width] = [Set value (n) of CF-13] x 0.5 x [Scale interval]

When the set value of C function CF-13 is [10] and the scale interval is [D = 5], that is

[Zero tracking data width] = 10 x 0.5 x 5D = 25D

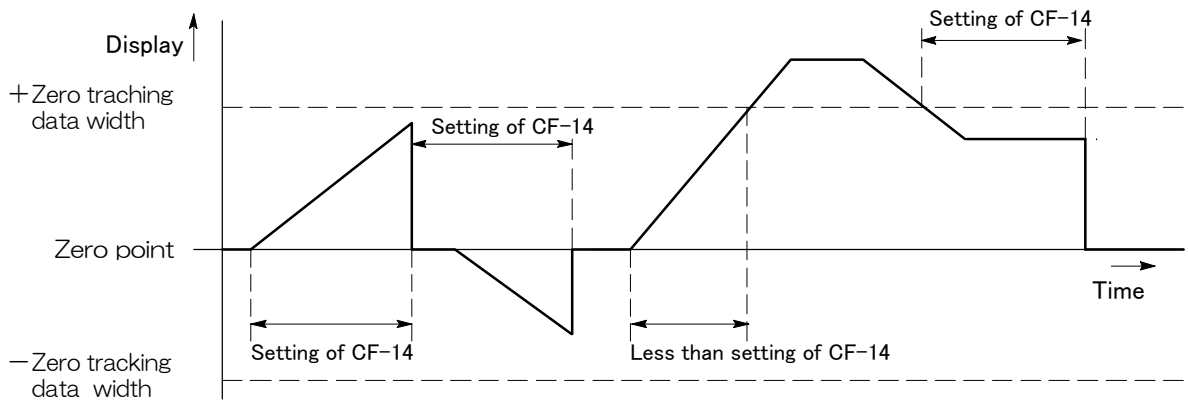

- **The zero tracking does not operate when either of setting C function CF-13 or CF-14 is [0].**
- **Please do not use the zero tracking when the load vibrates gradually in the vicinity of the zero point.**
- **Please note that the zero tracking might become effective even if an actual load change is rapid when the load change becomes gradual by strength of the digital filter and the stabilization filter.**
- **The zero tracking will not be operated when the zero compensation is executed for the effective range of portion by the zero tracking and zero set.**

6-9. Power on zero

The power on zero function changes the display to zero if the changes of display is within ±10 % of the maximum capacity when the power is turn on, or in the stable condition in the operation of display turning on.

6-9-1. The operation of power on zero

The operation of power on zero is selected by C function CF-15.
The power-on-zero operation is selected from [Effective] and [Invalid].
Default is set to [Invalid].

- **The zero compensation is not accepted in the following condition when the setting of C functions CF-15 is [Effective power on zero] and when power on zero is starting.**
  (1) When the display is not a stable condition, it becomes as all lighting.
  (2) When the measurement value exceeds ±10 % of the weighing capacity, [------] is displayed.
  At this time, by pressing the SET key, the display becomes a load value compulsorily.
- **When the power on zero is executed, each data of tare weight cancellation, preset tare weight cancellation, zero set and zero tracking shall be all cleared.**

6-10. Tare weight cancellation

By pressing the TARE key, the indication of [TARE] and [NET] in the condition display section is turned on and the display changes to zero.

To execute the tare weight cancellation clear, press the TARE key when the gross value is zero. The tare weight cancellation is cleared and [GROSS] of the condition display section lights at the same time as becoming a gross value display.

6-10-1. Operating condition of tare weight cancellation

The operating condition of tare weight cancellation is selected by C function CF-16.
[Operation when it is steady and 0 < GROSS ≦ WEIGHING CAPACITY],
[Operate unconditionally and 0 < GROSS ≦ WEIGHING CAPACITY],
[Operation when it is steady and 0 < GROSS ≦ | WEIGHING CAPACITY |] and
[Operate unconditionally and 0 < GROSS ≦ | WEIGHING CAPACITY |] can be selected.
Default is set to [Operation when it is steady and 0 < GROSS ≦ WEIGHING CAPACITY]

- **The tare weight cancellation is not accepted when the gross value is larger than the first range.**
- **When the tare weight cancellation is executed with a preset tare weight cancellation executed, a preset tare weight cancellation is canceled, and the tare weight cancellation is executed. (A preset tare weight cancellation cannot be used together with the tare weight cancellation)**
- **When the zero set is executed in the condition of gross value display, the tare weight cancellation will be cancelled.**

6-11. Clear at power on

Setting of the clear at power on is selected by C function CF-18.

Clear at power on function is clear [Data of tare weight cancellation],

[Data of preset tare weight cancellation] and [Data of zero set and zero tracking] when the power is turn on, or in the operation of display turning on.

Setting: 000 ~ 111, 0: Invalid, 1: effective, Default: 000

10^0: Data of tare weight cancellation

10^1: Data of preset tare weight cancellation

10^2: Data of zero set and zero tracking

6-12. Setting while set mode 2 or set of preset tare

Proceed to set the unit display in sub-display section and the stability detections in condition display while the set mode 2 or set of preset tare.

6-12-1. Operation for stability detection

The selection whether the stability detection is effective or invalid is made by C function CF-20.

Default is set to [Invalid].

6-12-2. Operation for unit display in sub-display section

The selection whether the unit display in sub-display section is effective or invalid is made by C function CF-21. Default is set to [Invalid].

6-13. Gravity acceleration compensation

When the calibration place and the using place of the measuring are different, the error is caused in span by the difference of the gravity acceleration of the various place districts.

The gravity acceleration compensation function is a function for the compensation of this span error by setting the gravity acceleration of two districts with a different calibration place and using place.

When the calibration place and the using place are the same, it is not necessary to execute the gravity acceleration compensation.

6-13-1. Setting method of gravity acceleration compensation

The setting method of the gravity acceleration compensation is selected by C function CF-25.

[The district number is set] or [The numerical value of gravity acceleration is set] can be selected.

Default is set to [The district number is set].

6-13-2. Setting of district number of the using place (When CF-25: 0)

The setting of the district number of the using place is executed by C function CF-26.

The setting of district number: 01 ~ 16

Default is set to 10 districts.

Please refer to [Gravity acceleration compensation table] in the next page.

6-13-3. Setting of district number of the calibration place (When CF-25: 0)

The district number of the calibration place can be set by C function CF-27.

The set of the district number: 01 ~ 16

Default is set to 10 districts.

Please refer to [Gravity acceleration compensation table] in the next page.

6-13-4. Setting of Gravity acceleration value of the using place (When CF-25: 1)

The gravity acceleration value of the using place can be set by C function CF-28.
Setting range: 9.000 ~ 9.999
Default is set to [9.797].
Please refer to [Gravity acceleration compensation table] in the next page.

6-13-5. Setting of Gravity acceleration value of the calibration place (When CF-25: 1)

The gravity acceleration value of the calibration place can be set by C function CF-29.
Setting range: 9.000 ~ 9.999
Default is set to [9.797].
Please refer to [Gravity acceleration compensation table] in the next page.

< The compensation table of gravitational acceleration (for reference) >

District No.	Acceleration (m/s2)	Pertinent district
1	9.806	Kushiro-shi, Kitami-shi, Abashiri-shi, Wakkanai-shi, Monbetsu-shi, Nemuro-shi, Branch administrative office jurisdiction of Souya, Rumoi, Abashiri, Nemuro, and Kushiro.
2	9.805	Sapporo-shi, Otaru-shi, Asahikawa-shi, Yubari-shi, Iwamizawa-shi, Biubai-shi, Ashibetsu-shi, Ebetsu-shi, Akahira-shi, Shibetsu-shi, Furano-shi, Nayoro-shi, Mikasa-shi, Chitose-shi, Takigawa-shi, Sunagawa-shi, Utashinai-shi, Fukagawa-shi, Eniwa-shi, Branch administrative office jurisdiction of Ishikari, Goboro, Kamikawa, and Sorachi.
3	9.804	Hakodate-shi, Muroran-shi, Obihiro-shi, Tomakomai-shi, Noboribetsu-shi, Date-shi, Branch administrative office jurisdiction of Toshima, Hinoyama, Tanshin, Hidaka and Tokachi
4	9.803	Aomori-ken
5	9.802	Iwate-ken, Akita-ken
6	9.801	Miyagi-ken, Yamagata-ken
7	9.800	Fukushima-ken, Ibaragi-ken, Niigata-ken
8	9.799	Tochigi-ken, Toyama-ken, Ishikawa-ken
9	9.798	Gunma-ken, Saitama-ken, Chiba-ken, Tokyo(excluding branch administrative office jurisdiction of Hachijojima, Ogasawara), Fukui-ken, Kyoto-fu, Tottori-ken, Shimane-ken
10	9.797	Kanagawa-ken, Yamanashi-ken, Nagano-ken, Gifu-ken, Shizuoka-ken, Aichi-ken, Mie-ken, Wakayama-ken, Shiga-ken, Osaka-fu, Hyogo-ken, Nara-ken, Okayama-ken, Hiroshima-ken, Yamaguchi-ken, Tokushima-ken, Kagawa-ken,
11	9.796	Tokyo(Only branch administrative office jurisdiction of Hachijojima), Ehime-ken, Kochi-ken, Fukuoka-ken, Saga-ken, Nagasaki-ken, Oita-ken
12	9.795	Kumamoto-ken, Miyazaki-ken
13	9.794	Kagoshima-ken (excluding branch administrative office jurisdiction of Nase-shi and Oshima-gun
14	9.793	Tokyo(Only branch administrative office jurisdiction of Ogasawara)
15	9.792	Kagoshima-ken(Only branch administrative office jurisdiction of Nase-shi and Oshima-gun)
16	9.791	Okinawa-ken

Confirm the details of the gravitational acceleration by the service of the gravity data on the homepage of [Science chronology] and Geographical Survey Institute, etc.
(http://vldb.gsi-mc.go.jp/sokuchi/gravity/calc/gravity.pl)

6-14. Automatic range switch

Automatic range switch function switches automatically and displays the scale interval by the measuring data of the gross or net value by dividing the range of the measurement to the weighing capacity into 2 or 3.

6-14-1. Setting of the range switch operation

The range switch operation can be selected by C function CF-40.

The range switch can be selected from [OFF (without range switch)], [Two range switch] and [Three range switch].

Default is set to [OFF].

6-14-2. Setting the scale interval of the second range

The scale interval of the second range can be set by the C function CF-41.

The scale interval can be selected from [1 scale interval], [2 scale interval], [5 scale interval], [10 scale interval], [20 scale interval] and [50 scale interval]. Default is set to [5 scale interval].

6-14-3. Setting the boundary value of the second range

The boundary value of the second range can be set by C function CF-42.

Setting range: 0 ~ 999999, Default is set to [003000].

6-14-4. Setting the scale interval of the third range

The scale interval of the third range can be set by the C function CF-43.

The scale interval can be selected from [1 scale interval], [2 scale interval], [5 scale interval], [10 scale interval], [20 scale interval] and [50 scale interval]. Default is set to [10 scale interval].

6-14-5. Setting the boundary value of the third range

The boundary value of the third range can be set by C function CF-44.

Setting range: 0 ~ 999999. Default is set to [006000].

Ex.1 In case of gross value

The first range:	300.0 g (Boundary of the second range), scale interval 0.1 g (The scale interval in calibration)
The second range:	600.0 g (Boundary of the third range), scale interval 0.5 g (Scale interval of the second range)
The third range:	1 000.0 g (The weighing capacity), scale interval 1 g (Scale interval of the third range)

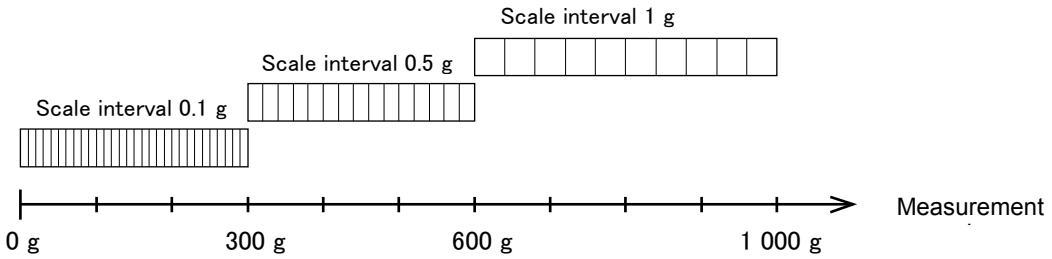

The measurement from 0 to 300 g becomes the first range (scale interval 0.1 g).

The measurement from 300 to 600 g becomes the second range (scale interval 0.5 g).

The measurement from 600 to 1 000 g becomes the second range (scale interval 1 g).

Ex.2 In case of net value cancelled 300 g of tare weight set in ex.1

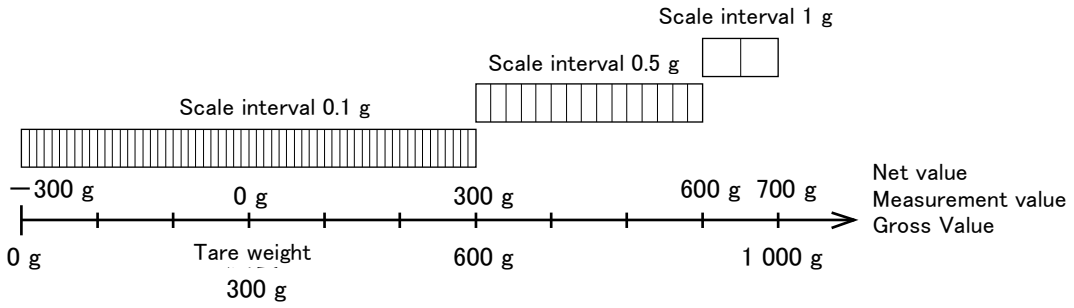

The measurement from -300 to 300 g becomes the first range (scale interval 0.1 g).
The measurement from 300 to 600 g becomes the second range (scale interval 0.5 g).
The measurement from 600 to 700 g becomes the second range (scale interval 1 g).

- **When it is used only within the first range (C function CF-40: OFF), it is not necessary to set the range.**
- **Please make the relations of the scale interval of the each range as the first range＜the second range＜the third range.**
- **Please make the relations of the each boundary value of each range as the second range≦the third range≦the weighing capacity.**
- **The range upper bound within the range of second is a weighing capacity for the switch by two ranges.**
  The range upper bound within the range of third is a weighing capacity for the switch by three ranges.
- **The comparator setting and the preset tare weight cancellation setting become the scale interval set in the first range.**

6-15. Setting of the stability detection time width in calibration

The stability detection time width in calibration can be set by C function CF-97.
Setting range: 00 ~ 99 Units: 0.1 s
Default is set to [05].

6-16. Digital linearize clear

The compensation data set in the digital linearization can be cleared by the C function CF-98.

If the F key is pressed with CF-99 display, LnrCLr becomes a blinking display.

Press the ON/OFF key to discontinue the digital linearization at this point.
It becomes a stand-by condition, and the digital linearization is not clear.

CF-99 is displayed If the F key is pressed when LnrCLr displays blinking, and the operation of digital linearization is completed.

6-17. Memory clear

A clear memory is executed by C function CF-99, and the setting contents of C function is returned to the default setting.

By pressing the F key in the display condition of CF-99, CF.CLr becomes a blinking.

Please press the ON/OFF key to discontinue the clear memory at this point.
It becomes a stand-by mode, and digital linearization is not clear.

If the F key is pressed when CF.CLr displays blinking, the display section is turned off and becomes to CF-01 display, then the operation of memory clear is completed.

7. Function mode

Various functions become effective by setting the function data.

7-1. Setting method of the function mode

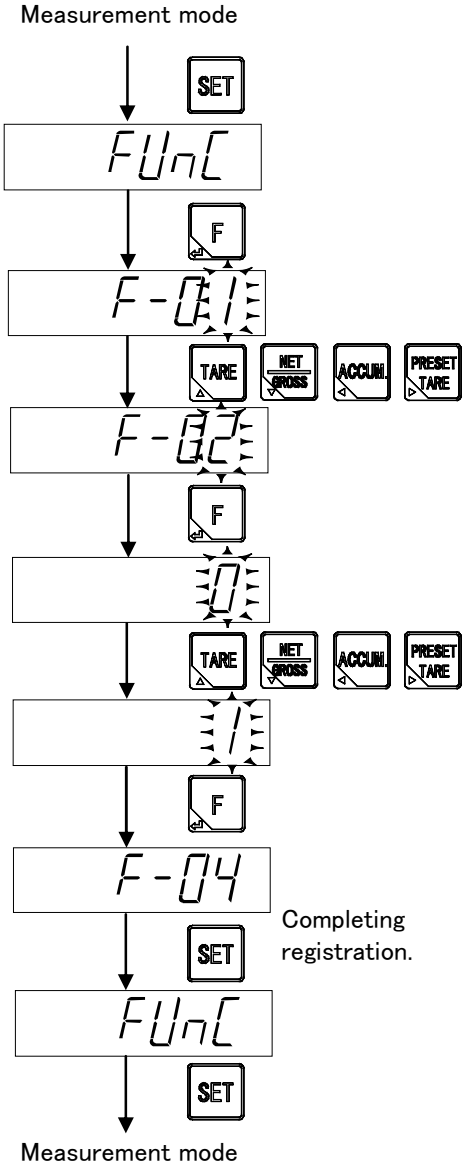

Change from the standard measurement mode to the FUnC display by the SET key.

By pressing the F key, F-01 is displayed.
Please select function number which you want to change.

TARE NET GROSS: Change the value of changing digit.

ACCUM. PRESET TARE: Select the changed digit.

ZERO : Change the display value into [0].

SET : Return to the FUnC display.

F : Memorize the display value and proceed to the next step.

ON OFF : The function mode is finished without changing all setting.

Please press the F key, and set the setting value of the selected unction number.

Please press the F key. The setting content is registered and the display panel displays the following registered function number.
Please continue and select the selected function number when you change setting of other function numbers.

If the SET key is pressed after registration is completed, it becomes FUnC display. Please set to the measurement mode by pressing the SET key.

Please do not change in the set value under the measurement because the A/D sampling rate decreases temporarily while rewriting the set value.

7-2. Function of the function data

Item	Function No.	Setting value	Contents
Setting of digital filter	F-01	001 ~ 256 ●016	Unit : Moving average time 1 times
Setting of analog filter	F-02	0	2 Hz
		●1	4 Hz
		2	6 Hz
		3	8 Hz
		4	10 Hz
Display times	F-04	●0	4 times/s
		1	20 times/s
Setting of stabilizating filter	F-05	001 ~ 256 ●092	Unit : Moving average time 1 times
Data width of stabilizing filter	F-06	000 ~ 999 ●020	Unit : 0.1D 000 : Stabilization filter OFF
Time width of stabilizing filter	F-07	00 ~ 99 ●05	Unit : 0.1 s 00 : Stabilization filter OFF
Lock the key 1	F-08	0000 ~ 1111 ●0000	0 : Invalid 1 : Valid 10^0 : key for ON/OFF 10^1 : key for setting 10^2 : key for accumulation/◀ 10^3 : key for the set of tare weight/▶
Lock the key 2	F-09	0000 ~ 1111 ●0000	0 : Invalid 1 : Valid 10^0 : key for tare weight cancellation/▲ 10^1 : key for net or gross weight/▼ 10^2 : key for zero set 10^3 : key for F/↵
Stability detection data width	F-10	000 ~ 999 ●020	Unit : 0.1D 00 : Stabilization filter OFF
Stability detection time width	F-11	00 ~ 99 ●10	Unit : 0.1 s 00 : Stabilization filter OFF
Operating condition of the preset tare weight cancellation	F-15	●0	Invalid
		1	Effective
		2	Net weight offset operation
Automatic print operation	F-16	00 ~ 11 ●00	10^0 digits : manual print operation effective only in the stable. 0 : effective only in the stable 1 : always effective 10^1 digit : Automatic print operation 0 : turn off the automatic printing 1 : automatic printing in the stable
Hold operation	F-17	●0	Synchronizing with Hold
		1	Synchronizing with Batch Finish
Target of Hold	F-18	0000 ~ 1111 ●0001	0 : Invalid 1 : Valid 10^0 digit : Display 10^1 digit : Comparison result 10^2 digit : CC-link interface 10^3 digit : Serial interface

● Has been set as default

Item	Function No.	Setting value	Contents
Selection of sub display section	F-19	●0	OFF
		1	A Brand (1 digit) / Accumulation times (6 digits) / Accumulation value (8 digits)
		2	B Brand (1 digit) / Accumulation times (6 digits) / Last accumulated data (6 digits)
		3	C Brand (1 digit) / Last accumulated data (6 digits) / Accumulation value (8 digits)
		4	D Brand (1 digit) / Last accumulated data (6 digits) / OK (6 digits)
		5	E Brand (1 digit) / Accumulation times (6 digits) / OK (6 digits)
		6	F Brand (1 digit) / OK (6 digits) / Accumulation value (8 digits)
		7	G Brand (1 digit) / Near zero (6 digits) / Full (6 digits)
		8	(No letter) OK (6 digits) / Over (5 digits) / Under (5 digits)
		9	I Brand (1 digit) / OK (6 digits) / Free fall (6 digits)
		10	J Brand (1 digit) / S1 (6 digits) / S2 (6 digits)
		11	K Brand (1 digit) / S1 (6 digits) / S3 (6 digits)
		12	L Brand (1 digit) / S1 (6 digits) / S4 (6 digits)
		13	M Brand (1 digit) / S2 (6 digits) / S3 (6 digits)
		14	N Brand (1 digit) / S2 (6 digits) / S4 (6 digits)
		15	O Brand (1 digit) / S3 (6 digits) / S4 (6 digits)
		16	P Brand (1 digit) / OK (6 digits)
		17	Q Brand (1 digit) / Over (5 digits) / Under (5 digits)
		18	R Brand (1 digit) / Accumulation times (6 digits)
		19	S Brand (1 digit) / Accumulation value (10 digits)
		20	T Brand (1 digit) / Last accumulated data (6 digits)
Brand setting target on comparator	F-20	●0	Brand 0
		1	Brand 1
		2	Brand 2
		3	Brand 3
		4	Brand 4
		5	Brand 5
		6	Brand 6
		7	Brand 7
Operation target on 4 steps comparator	F-21	0000 ~ 1111 ●0000	0 : Display interlock
			1 : Gross
			2 : Net
			10^0 digit : Comparator S1
			10^1 digit : Comparator S2
			10^2 digit : Comparator S3
			10^3 digit : Comparator S4

●Has been set as default

Item	Function No.	Setting value	Contents
Operation on 4 steps comparator	F-22	0000 ~ 1111 ●0000	0 : OFF
			1 : More than
			2 : Less than
			10^0 digit : Comparator S1
			10^1 digit : Comparator S2
			10^2 digit : Comparator S3
			10^3 digit : Comparator S4
Operation of 4 steps comparator S0	F-23	●0	Always OFF
		1	On when both of S1 and S2 output are OFF
		2	On when both of S1 and S3 output are OFF
		3	On when both of S1 and S4 output are OFF
		4	On when both of S2 and S3 output are OFF
		5	On when both of S2 and S4 output are OFF
		6	On when both of S3 and S4 output are OFF
		7	On when (Gross weight)≧(Weighing capacity)
Comparator hysteresis operating conditions	F-24	●0	On delay
		1	Off delay
Width of comparator hysteresis data	F-25	00 ~ 99 ●00	Unit : 1D 00 : Hysteresis OFF
Width of comparator hysteresis time	F-26	00 ~ 99 ●00	Unit : 0.1 s 00 : Hysteresis OFF
BCD output operation mode	F-30	●0	Stream
		1	Synchronizing with print
		2	Synchronizing with accumulation
		3	Synchronizing with finish
BCD output target	F-31	●0	Display interlock
		1	Gross value
		2	Net value
		3	Tare weight value
		4	Accumulation total amount
		5	Accumulation frequency
BCD output logic	F-32	0000 ~ 1111 ●0000	0 : Negative logic 1 : Positive logic 100 digit : Data output logic (Load data and decimal point) 101 digit : Polarity logic 102 digit : Flag logic (ERROR, OVER, Stable, Gross) 10^3 digit : P.C. (Print command) logic
BCD P.C. (Print command) width	F-33	0	125 ms
		●1	25 ms
		2	5 ms
BCD output times	F-34	●0	4 times/s
		1	20 times/s
		2	100 times/s
S-I/F automatic print operation	F-37	●0	OFF
		1	Synchronizing with print signal
		2	Synchronizing with accumulation signal
		3	Synchronizing with finish signal

● Has been set as default.

Item	Function No.	Setting value	Contents
RS-232C operating mode	F-40	●0	Command mode
		1	Stream mode
		2	Synchronizing with finish signal
		3	Synchronizing with accumulation signal
		4	Synchronizing with print signal
Output target of RS-232C/422/485	F-41 (RS-232C : Valid at F-40 = 1 or 4, RS-422/485 : Valid at F-49=1)	●0	Display interlock
		1	Gross value
		2	Net value
		3	Load display data with condition
RS-232C/422/485 specification for communication	F-42	●13020	Data bit length 10^0 digit : ●0 = 7 bit, 1 = 8 bit Parity 10^1 digit : 0 = No parity, 1 = Even parity ●2 = Odd parity Stop bit 10^2 digit : ●0 = 1 bit, 1 = 2 bit Baud rate 10^3 digit : 0 = 1 200 bps, 1 = 2 400 bps, 2 = 4 800 bps, ●3 = 9 600 bps, 4 = 19 200 bps, 5 = 38 400 bps Terminator 10^4 digit : 0 = CR, ●1 = CR+LF
RS-422/485 Address setting	F-43	00 ~ 31 ●00	
Changeover of RS-422/485	F-44	●0	RS-422
		1	RS-485
RS-485 reply data delay time	F-45	00 ~ 99 ●01	Unit : 10 ms
RS-232C/422/485 transmission data decimal point existence	F-46	●0	Nothing
		1	Existing
Standard RS-485 operation	F-47	●0	Command mode
		1	Modbus mode
		2	Stream mode
		3	Synchronizing with finish signal
		4	Synchronizing with accumulation signal
		5	Synchronizing with print signal
Output target of standard RS-485	F-48 (Effective at F-47=2)	●0	Display interlock (HOLD at ON of HOLD signal)
		1	Gross value
		2	Net value
		3	Conditional load display data
Operation mode of RS-422/485	F-49	●0	Command mode
		1	Stream mode

● Has been set as default.

Item	Function No.	Setting value	Contents
Operation condition for accumulating function	F-50	000 ~ 121 ●000	Accumulation command operation. 10^0 digit: 0 = only in stale, 1 = Always Automatic accumulating operation 10^1 digit: 0 = OFF, 1 = Synchronizing with finish, 2 = Automatic accumulation at stable Automatic accumulating condition 10^3 digit: 0 = Only in OK mode, 1 = No condition
Target of brand changeover	F-51	●0	Changeover by function
		1	Changeover by external control input
		2	Changeover by communication
Brand number	F-52	●0	Brand 0
		1	Brand 1
		2	Brand 2
		3	Brand 3
		4	Brand 4
		5	Brand 5
		6	Brand 6
		7	Brand 7
Setting F key operation	F-55	●0	OFF
		1	Print Input
		2	Hold Input
		3	Batch start
		4	Emergency stop
		5	Zero clear
		6	Tare clear
		7	Accumulation clear
		8	Measurement comparison
		9	Forced batch finish
External control input INPUT1 operation setting (Settings 1 to 8 operate all the time, settings 9 to 27 operate only in measurement mode.)	F-60	●0	OFF
		1	ON OFF key operation
		2	SET key operation
		3	ACCUM key operation
		4	PRESET TARE key operation
		5	TARE key operation
		6	NET GROSS key operation
		7	ZERO key operation
		8	F key operation
		9	Zero clear
		10	Tare clear
		11	Flow start
		12	Discharge start
		13	Flow/Discharge changeover ON: Discharge, OFF: Flow
		14	Clear the last accumulated data
		15	Accumulation clear
		16	Error cancellation
		17	Print command
		18	Hold

●Has been set as default

Item	Function No.	Setting value	Contents
		19	Emergency stop
		20	Manual free fall compensation
		21	Net display
		22	Forced batch finish
		23	Forced discharge finish
		24	Accumulation clear for all brands
		25	Brand No. 1
		26	Brand No. 2
		27	Brand No. 4
External control input INPUT2 operation setting	F-61	It is optional as well as F-60	
External control input INPUT3 operation setting	F-62	It is optional as well as F-60	
External control input INPUT4 operation setting	F-63	It is optional as well as F-60	
External control input INPUT5 operation setting	F-64	It is optional as well as F-60	
External control input INPUT6 operation setting	F-65	It is optional as well as F-60	
External control input INPUT7 operation setting	F-66	It is optional as well as F-60	
External control input INPUT8 operation setting	F-67	It is optional as well as F-60	
External control input INPUT9 operation setting	F-68	It is optional as well as F-60	
External control output OUTPUT1 operation setting	F-70	●00	OFF
		01	Stable
		02	During canceling the Tare weight
		03	Display of Gross
		04	Display of Net
		05	Zero
		06	During the hold
		07	Error
		08	Abnormal weight
		09	Measuring sequence error
		10	Z-Band
		11	OK (S0)
		12	F flow (S1)
		13	M flow (S2)
		14	D flow (S3)
		15	Over (S4)
		16	Under
		17	Full
		18	During weighing
		19	Finish weighing
		20	Discharge (between the discharge gate)
		21	Finish Discharge (between the discharge gate)
		22	RUN

●Has been set as default

Item	Function No.	Setting value	Contents
Eternal control output OUTPUT2 operation setting	F-71	It is optional as well as F-70	
External control output OUTPUT3 operation setting	F-72	It is optional as well as F-70	
External control output OUTPUT4 operation setting	F-73	It is optional as well as F-70	
External control output OUTPUT5 operation setting	F-74	It is optional as well as F-70	
External control output OUTPUT6 setting	F-75	It is optional as well as F-70	
External control output OUTPUT7 operation setting	F-76	It is optional as well as F-70	
External control output OUTPUT8 operation setting	F-77	It is optional as well as F-70	
External control output OUTPUT9 operation setting	F-78	It is optional as well as F-70	
External control output OUTPUT10 operation setting	F-79	It is optional as well as F-70	
External control output OUTPUT11 operation setting	F-80	It is optional as well as F-70	
External control output OUTPUT12 operation setting	F-81	It is optional as well as F-70	
External control output OUTPUT13 operation setting	F-82	It is optional as well as F-70	
CC-Link Occupied stations	F-84	0	1 station occupied
		1	2 stations occupied
		●2	4 stations occupied
CC-Link Setting the station number	F-85	01 ~ 64 ●01	When F-84=0, 01 ~ 64 When F-84=1, 01 ~ 63 When F-84=2, 01 ~ 61
CC-Link Setting baud rate	F-86	●0	156 kbps
		1	625 kbps
		2	2.5 Mbps
		3	5 Mbps
		4	10 Mbps
CC-Link 32 bits date format	F-87	●0	Standard binary format
		1	At minus, The most significant digit is fixed to [8]
Maintenance day	F-90	Do not use here	
Maintenance No.	F-91	Do not use here	
Memory clear	F-99	Set the function content is returned to setting default	

●Has been set as default

8. Various functions by function data

8-1. Digital filter

The digital filter function is a steady function by the running average processing of data into which A/D is converted.

The running average frequency is selected by setting function F-01.

Setting range: 001-256 Units: 1 time of moving average frequency.

Default is set to [16 times].

The tendency to the characteristic by the running average is shown in the table below.

Running average frequency Little Much

Running average frequency	Little		Much
Noise proof	Sharpness	⇔	Stable
Response speed	Quick	⇔	Slow

8-2. Analog filter

The analog filter function is the function to reduce the noise of the input signal by filtering.

The frequency is selected by C function F-02.

The frequency can be selected from [2 Hz], [4 Hz], [6 Hz], [8 Hz] and [10 Hz].

Default is set to [4 Hz].

8-3. Display frequency

The display frequency can be selected by the setting of function F-04.

The display frequency can be selected from [4 times/s] or [20 times/s].

Default is set to [4 times/s].

8-4. Stabilization filter

The stabilization filter facility is a function to make the digital filter strong when the change width of the load display, and when the condition continues longer than the fixed time.

8-4-1. Setting of stabilization filter

The moving average frequency for the stabilization filter can be selected by function F-05.

Setting range: 001-256, Unit: 1 time of moving average frequency

Default is set to [92 times].

8-4-2. Data width of stabilization filter

The data width of stabilization filter can be set by the function F-06.

Setting range : 000 ~ 999, Unit : 0.1D, 000 : OFF

Default is set to [020].

8-4-3. Time width of stabilization filter

The time width of stabilization filter can be set by the function F-07.

Setting range : 00 ~ 99, Unit : 0.1 s, 00 : OFF

Default is set to [05].

[Example] The data width to which the stabilization filter is executed is selected by the function F-06.

The data width of the stabilization filter for each set value [n] is obtained in the display conversion by the following expression.

[Data width of stabilization filter] ＝ [Setting value of F-06] x [The scale interval]

When the setting by function F-06 is [10], and the scale interval is [D＝5], it will be as follows;

[Data width of stabilization filter] ＝10 x 5 x 0.1 ＝5 D

When the change width of the load display is within the value set by function F-06, and when the condition continues for the time for function F-07 or more, the stabilization filter set by function F-05 becomes effective.

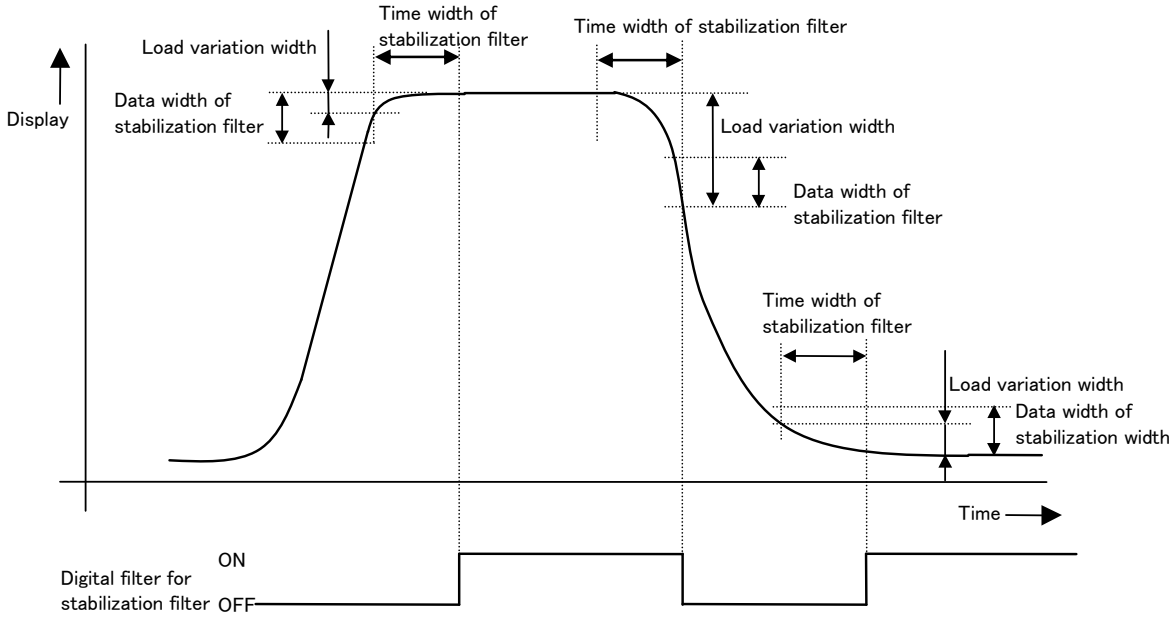

When the digital filter is set by function F-01, the moving average process executes [Moving average of stabilization filter function (F-05)], after [The moving average of digital filter(F-01)]

8-5. Key lock function

Lock the key function limit a key operation of front panel for avoids wrong operation of keys.

8-5-1. Key lock 1

The function of F-08 sets whether the key operation of [ON/OFF], [SET], [ACCUM./◀] and [PRESET TARE/▶] is [valid] or [invalid].
Setting range: 0000-1111, 0 : Invalid, 1 : Valid
10^0 digit : ON/OFF
10^1 digit : SET
10^2 digit : ACCUM./◀
10^3 digit : PRESET TARE/▶

The operation of [SET] key becomes valid only once by pressing [SET] key and [NET/GROSS] key at the same time when the operation of [SET] key is locked.

8-5-2. Key lock 2

The function of F-09 sets whether the key operation of [TARE/ ▲], [NET/GROSS/ ▼], [ZERO] or [F/ ⏎] is [valid] or [invalid].
Setting range: 0000-1111, 0: Invalid, 1: Valid
10^0 digit: TARE/ ▲
10^1 digit: NET/GROSS/ ▼
10^2 digit: ZERO
10^3 digit: F/ ⏎

8-6. Stability detection

When the change width of the load display is within the data width set by function F-10, and when the condition continues for the time set by function F-11 or more, the stability detection is the function to judge the measuring value being stable.

8-6-1. Data width of stability detection

The data width of stability detection can be set by function F-10.
Setting range : 000-999, Unit: 0.1D, 0 : OFF
Default is set to [020].
The data width is obtained in the display conversion by the below formula.
[Data width of stability detection] = [Setting value of F-10] x 0.5 x [The scale interval]
When the setting of function F-10 is [5], and when the scale interval is [D = 2], it will become as follows;
[Data width stability detection] = 5 x 0.1 x 2 = 1D

8-6-2. Time width of stability detection

The time width of stability detection can be set by function F-11.
Setting range : 00-99, Unit : 0.1 s, 0 : OFF
Default is set to [10].

When two range or three range switches have been selected by the automatic range switches, the data width of the stability detection execute the display conversion of the data width by the value of the first range scale interval (scale interval in the calibration).

8-7. Input of the preset tare weight cancellation

The preset tare weight cancellation function executes the tare weight cancellation according to the set value by which digital is input.

8-7-1. Operating condition of the preset tare weight cancellation

The preset tare weight cancellation can be selected as [Effective], [Invalid], or [Net weight offset operation], using function F-15. Default is set to [Effective].

8-7-2. Input of the preset tare weight cancellation

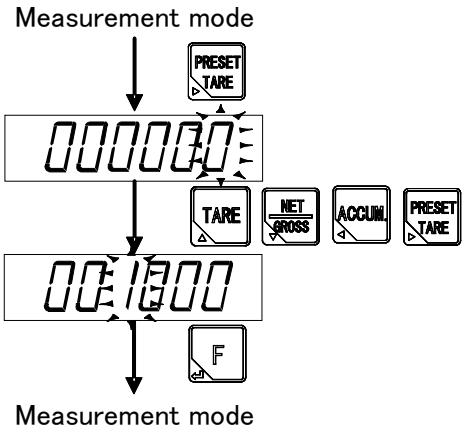

By pressing the PRESET TARE key from the normal measurement mode, you can see the input display for setting the preset tare weight cancellation.
As the value being memorized now is displayed while the tare weight cancellation is setting, please set the value of preset tare weight cancellation by using the following keys.

TARE NET GROSS: Change the value of changing digit.
ACCUM. PRESET TARE: Select the changed digit.
ZERO: Change the display value into [0].
SET: The displayed value is not memorized, and it returns to the measurement mode.
F: Memorize the display value and proceed to the next step.
ON OFF: The display is turned off without changing all setting, and it becomes the stand-by condition.

After changing, the F key is pressed. A preset tare weight cancellation is executed, the load display becomes [Net value = Gross value − preset tare weight setting value], and [PRESET] and [NET] of the status display lights.

- **If the preset tare weight cancellation is set as [Effective] and automatic range switching is set, the setting range in which a preset tare weight cancellation can be input is within the first range.**
- **If preset tare weight cancellation is set as [Effective] and when preset tare weight cancellation is executed while tare weight cancellation is being executed, tare weight cancellation will be cancelled and preset tare weight cancellation will be executed.**
- **If preset tare weight cancellation is set as [Effective] and when the zero set is executed with the gross value displayed, the preset tare weight cancellation will be cleared.**

8-7-3. Net weight offset operation

If preset tare weight cancellation is set as [Net weight offset operation] and when the zero set is executed with gross value displayed, the net weight offset will not be cleared. The resulting value after subtracting the net weight offset from the gross weight will be the net weight.

- **If preset tare weight cancellation is set as [Net weight offset operation] and when preset tare weight cancellation is executed while tare weight cancellation is being executed, the net weight offset operation will not be executed. (The tare weight cancellation function takes priority over the net weight offset operation.)**

8-8. Print command

Execute the setting of print operation of manual and automatic, manual printing operation is used when the print operation is executed by the method either setting the F key to print or using the external control I/O.

Automatic print operation is used to print out automatically at every time when load on a weighing section is measured by using a 2-wires method serial interface, BCD output interface or RS-422/485 interface.

8-8-1. Print operation status

The print operation status is selected by function F-16.

Setting range: 00-11

10^0 digit: manual print operation effective only in the stable.

[0]: Effective only in the stable. [1]: Always effective

10^1 digit: Automatic print operation.

[0]: Turn off the automatic printing. [1]: Automatic printing in the stable.

[00] is selected as default. Print by 'Print input' with F setting or external control I/O.

8-9. Hold

This function retains the various data of a load display value, a comparison result, a CC-link interface and a serial interface while measuring.

The hold signal can input by setting the F into hold or by using the external control I/O.

8-9-1. Hold operation

Select the hold operation status by function F-17.

Hold operation status is selectable from [Synchronizing with Hold] or [Synchronizing with Batch Finish]

Default is set to [Synchronizing with Hold].

8-9-2. Hold target

(1) Hold of load display value

Whether valid or invalid of holding operation of load display value is selected by the setting of 10^0 digit of F-18.

Default is set to [Valid].

The load display section changes into the error display of [OL] or [OVF] when [OL] or [OVF] error occurs while the holding operation of load display value.

(2) Hold of comparison result

Whether valid or invalid of holding operation of comparison result is selected by the setting of 10^1 digit of F-18. Default is set to [Invalid].

The holding targets of the simple comparison mode and the sequential mode are the signals of [Full Flow], [Medium Flow], [Dribble Flow], [Over], [OK], [Under], [Full] and [Near Zero].

The holding targets of the 4-steps comparator mode are the signals of [S1], [S2], [S3], [S4], [Full] and [Near Zero].

The condition data of a condition display, I/O output, Standard RS-485, RS-232C, RS-422/485 and CC-link corresponding to the holding target of comparison result is also held during the holding operation of comparative result.

(3) Hold of CC-Link interface

Whether valid or invalid of holding operation of output data by optional CC-Link interface is selected by the setting of 10^3 digit of F-18. Default is set to [Invalid].

The holding target when the setting of occupied station for CC-Link interface is selected by 4 stations is [Gross value] and [Net value].

The holding target in the selection of 2 or 1 station(s) is [Display value (Net value /Gross Value)].

The data of holding target retains holding condition even if the error of [OL] or [OVF] occurs in the holding operation of CC-Link interface. However, the occurrence of [OL] or [OVF] error can be detected by the signal of [Abnormal weight].

(4) Hold of 2 wires method serial interface

Whether valid or invalid of holding operation of output data by 2-wires method serial interface is selected by the setting of 10^4 digit of F-18.

Default is set to [Invalid].

Holding target is [Gross value], [Net value], [Tare weight cancellation value], [Gross value condition], [Net value condition], [Tare weight canceling condition], [Stable condition], [Center zero condition] and [Fired tare weight condition].

The data of holding target retains holding condition even if the error of [OL] or [OVF] occurs in the holding operation of 2-wires method serial interface. However, the occurrence of [OL] and [OVF] error can be detected by the signal of [OVR].

8-10. Sub display section

The value displayed at sub display section is selected.

8-10-1. Select the display of sub display section

The value displayed at sub display section is selected by function F-19.

Setting range: 0 to 20

0 :		OFF
1 :	A	Brand (1 digit) / Accumulation times (6 digits) / Accumulation value (8 digits)
2 :	B	Brand (1 digit) / Accumulation times (6 digits) / Last accumulated data (6 digits)
3 :	C	Brand (1 digit) / Last accumulated data (6 digits) / Accumulation value (8 digits)
4 :	D	Brand (1 digit) / Last accumulated data (6 digits) / OK (6 digits)
5 :	E	Brand (1 digit) / Accumulation times (6 digits) / OK (6 digits)
6 :	F	Brand (1 digit) / OK (6 digits) / Accumulation value (8 digits)
7 :	G	Brand (1 digit) / Near zero (6 digits) / Full (6 digits)
8 :		OK (6 digits) / Over (5 digits) / Under (5 digits)
9 :	I	Brand (1 digit) / OK (6 digits) / Free fall (6 digits)
10 :	J	Brand (1 digit) / S1 (6 digits) / S2 (6 digits)
11 :	K	Brand (1 digit) / S1 (6 digits) / S3 (6 digits)
12 :	L	Brand (1 digit) / S1 (6 digits) / S4 (6 digits)
13 :	M	Brand (1 digit) / S2 (6 digits) / S3 (6 digits)
14 :	N	Brand (1 digit) / S2 (6 digits) / S4 (6 digits)
15 :	O	Brand (1 digit) / S3 (6 digits) / S4 (6 digits)
16 :	P	Brand (1 digit) / OK (6 digits)
17 :	Q	Brand (1 digit) / Over (5 digits) / Under (5 digits)
18 :	R	Brand (1 digit) / Accumulation times (6 digits)
19 :	S	Brand (1 digit) / Accumulation value (10 digits)
20 :	T	Brand (1 digit) / Last accumulated data (6 digits)

Default is set to [0: OFF].

8-11. Accumulation

The accumulation function accumulates the load data.

Memorize the accumulation times, updated accumulation data and accumulation value

8-11-1. Operating condition for accumulation function

Operating condition for accumulation function is selected by function F-50.

Setting range: 000-111

10^0 digit: Accumulation command operation	[0] Only at stable condition, [1] Always
10^1 digit: Automatic accumulating operation	[0] OFF, [1] Synchronized with end signal, [2] Automatic accumulation in stable
10^2 digit: Automatic accumulating condition	[0] Only in OK condition, [1] with no condition

Default is set to [000].

8-11-2. Execute accumulation

(1) Manual accumulation

When the value set with 10^0 digit for F-50 is

0: the accumulation is executed by pressing ACCUM. key under the condition that the stability sign of status display is lights.

1: the accumulation is executed by pressing ACCUM. key regardless of lighting on or off the stability sign.

(2) Automatic accumulation

When the value set with 10^1 digit for F-50 is:

0: automatic accumulation does not work.

1: accumulation works automatically synchronizing with finish signal.

2: accumulation works automatically under the condition that the stability sign of status display lights.

Also, when the value set with 10^2 digit for F-50 in the condition that [1] is set with 10^1 digit for F-50 is:

0: accumulation works automatically in the condition that the finish signal outputs under lighting on sign of OK in the status display.

1: accumulation works automatically in the condition that the finish signal output regardless of lighting on or off the OK sign.

- **If the results exceed the display range of the accumulation value or accumulation times, accumulation is not executed. The status display [ACCUM.] mark blinks.**
- **Accumulating is prohibited if the result exceeds ±100% of the weighing capacity.**

8-11-3. Display range of the accumulated value and count

The display range of the accumulation value is from –9 999 999 999 to 9 999 999 999.

The display range of the accumulated count is from 0 to 999 999.

The upper limit of accumulated value disregards the displayed decimal point.

Example. When the position of decimal point is 0.0, the upper limit of accumulated value is 9 999 999 99.9.

When the accumulated value and the accumulated count exceeding the display range results, the additive of the count is not executed. As the error code display at sub display, please execute to clear the accumulated value and count.

8-11-4. The clear of accumulation value / the accumulation times

Clear the accumulation value and the accumulation times.
There are four methods for accumulating as follows.

- Press the ZERO key in accumulation display mode.
- Set a F key to [Accumulation clear] by setting F-55.
- Clear all brand accumulation by setting external control I/O.
- Clear all brand accumulation using SQ function SQF-98.

For details of accumulation display mode, see "Clause 3-1".
For details of SQ function setting, see "Clause 10".

8-12. Brands

Brand comparison values can be set for individual brand numbers.
Weighing is controlled using the various brand settings to ensure the target (OK) weight is achieved.
The CSD-903 is capable of storing up to eight different brands.
For details of the settings available for brands, see "9. Measurement mode".

8-12-1. Target of brand changeover

The brand number can be changed using function, external control input, or communication.
The changeover method enabled when changing the brand number is selected using the function F-51 setting.
To change the brand number in EzCTS mode, set function F-51 to [0: Changeover by function].
Setting range: 0 to 3

0: Changeover by function
The brand number can be changed by changing the function F-52 setting.
To change the brand number using standard RS485, RS-232C, or RS-422/485, change the brand number using the communication command [@007052].
For details of communication commands, see "16-3-12. Data format of command mode".
1: Changeover by external control input
Brand number changeover can only be enabled using external control input. If changeover by external control input has been selected, see "8-14. Setting of external control input".
2: Changeover by communication
This enables brand number changeover using the communication command [@0069].
For details of communication commands, see "16-3-12. Data format of command mode".

Default is set to [Changeover by key operation].

8-12-2. Brand number

The brand number enabled by measurement control is selected using function F-52.
Brand numbers 0 to 7 can be selected.
Default is set to [Brand No. 0].

8-13. Setting of F key

Operation of F key can be selected by function F-55.
Setting range: 0 ~ 9

0: OFF	No setting
1: Print	Input the print signal
2: Hold	Input the holding signal
3: Batch start	Input the signal to start batch
4: Emergency stop	Input the signal to emergency stop

5: Zero clear	Return the condition of display before the zero set and zero tracking when the zero set or the zero tracking executed
6: Tare clear	Execute the tare weight cancellation
7: Accumulation clear	Clear the accumulation value and times
8: Measurement comparison	Move to Measurement comparison value setting mode
9: Forced batch finish	Complete the weighing operation compulsorily

8-14. Setting of external control I/O

Set the external control I/O which I/O connecter is mounted at rear panel of this instrument.

8-14-1. Setting method of the external control input

The operation of an external control input is selected by setting function F-60 to F-68.

Setting range: 00 ~ 23

0: OFF	No setting
1: ON/OFF key	The same operation as the ON/OFF key
2: Setting key	The same operation as the Setting key
3: Accumulation key	The same operation as the Accumulation key
4: Preset tare key	The same operation as the Preset tare key
5: Tare key	The same operation as the Tare key
6: Gross/Net key	The same operation as the Gross/Net key
7: Zero key	The same operation as the Zero key
8: F key	The same operation as the F key
9: Zero clear	Return the condition of display before the zero set and zero tracking when the zero set or the zero tracking executed
10: Tare clear	Return the condition of display before the tare weight cancellation when the tare weight cancellation is executed.
11: Batch start	Input the signal to start batch
12: Discharge start	Input the signal to discharge batch
13: Changeover the flow and discharge	Changeover the measuring mode flow and discharge (ON: Discharge, OFF: Batch)
14: Clear the last accumulated data	Clear the last accumulated data
15: Accumulation clear	Clear the accumulation value and the accumulation times
16: Error cancellation	Cancel the Error
17: Print	Input the print signal
18: Hold	Input the holding signal
19: Emergency stop	Input the emergency signal
20: Manual free fall compensation	Do the free fall compensation
21: Display of Net	Display changes to Net of the load display.
22: Finish the weighing data compulsorily	Input the signal to finish the weighing data compulsorily
23: Finish the flow compulsorily	Input the signal to finish the flow compulsorily
24: All brand accumulation clear	Clear the accumulation value and accumulation times for all brands
25: Brand 1	Input brand number using BCD code
26: Brand 2	Input brand number using BCD code
27: Brand 4	Input brand number using BCD code

Default is set to [OFF]

The following items are level input, and become effective at the input of the shortening of 50 ms or more.

[13: Changeover the flow and discharge], [18: Hold], [21: Display of Net]

Other items are pulse input, and become effective once at the pulse input of over 50 ms or more.

8-14-2. Setting method of the external control output

The operation of the external control output is selected by setting function F-70 to F-82.

Setting range: 00 ~ 22

0 : OFF	No setting
1 : STABLE	Output during stable.
2 : DURING TARE	Output when the tare weight cancellation is executed.
3 : GROSS DISPLAY	Output when the display is the gross value.
4 : NET DISPLAY	Output when the display is the net value.
5 : CENTER OF ZERO	Output in the condition of the center zero.
6 : DURING HOLD	Output during the holding operation is made.
7 : ERROR	Output when the error is occurred.
8 : ABNORMAL WEIGHT	Output when display is OL
9 : WEIGHING Sequence ERROR	Output when the sequence error is caused.
10 : NEAR ZERO	Output in near zero.
11 : OK/S0	When the judgment condition becomes ok in sequential mode. Also when an output signal S0 is 'ON' status in 1 or 2 of comparator mode.
12 : F.FLOW/S1	When a output signal of full flow is [ON] status in sequential mode. Also when an output signal S1 is [ON] status in 1 or 2 of comparator mode.
13 : M.FLOW/S2	When a output signal of medium flow is [ON] status in the sequential mode. Also when an output signal S2 is [ON] status in 1 or 2 of comparator mode.
14 : D.FLOW/S3	When a output signal of dribble flow is [ON] status in the sequential mode. Also when an output signal S3 is [ON] status in 1 or 2 of comparator mode.
15 : OVER/S4	When the judgment condition becomes over in sequential mode. Also when an output signal S4 is [ON] status in 1 or 2 of comparator mode.
16 : UNDER	When the judgment condition becomes under in sequential mode.
17 : FULL	When the judgment condition becomes full in sequential mode.
18 : During measuring	Output during measuring.
19 : BATCH FINISH	Output in finishing the measurement.
20 : DISCHARGE (GATE OPEN)	Output in executing the discharge.
21 : DISCHARGE FINISH	Output in the finish of discharge.
22 : RUN	Output during measuring mode.

Default is set to [OFF].

8-15. Memory clear

Memory clear is executed by function F-99.

The setting content of the function is returned to the default setting.

When the F key is pressed with F-99 displayed, F.CLr becomes a blinking display.

At this time, please press the ON/OFF key to discontinue a clear memory.

It becomes a stand-by mode, and a clear memory is not executed.

When F.CLr is a blinking display, the display section is turned off by pressing the F key, and it becomes F-01 display, the operation of memory clear is completed.

Please do not clear the memory under the measurement to cause an unexpected malfunction.

9. Measurement mode

CSD-903 consists of four measurement modes. Please set it with [Clause 9-1].
In addition, please set each measurement comparison value in referring to [Clause 9-2].
Furthermore, there are two control modes about [Simple comparative mode], [Sequential mode], and they divide to [Batch mode], and [Discharge mode].

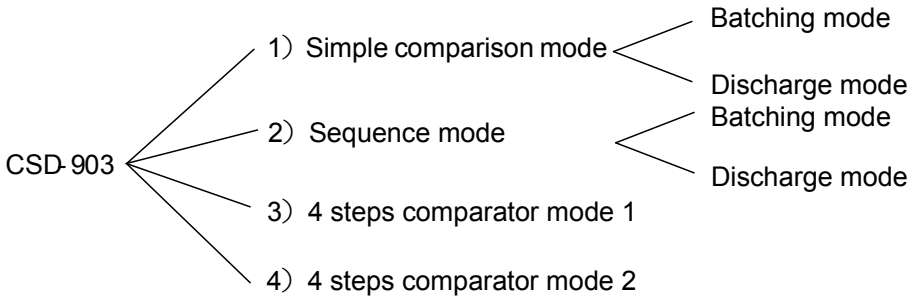

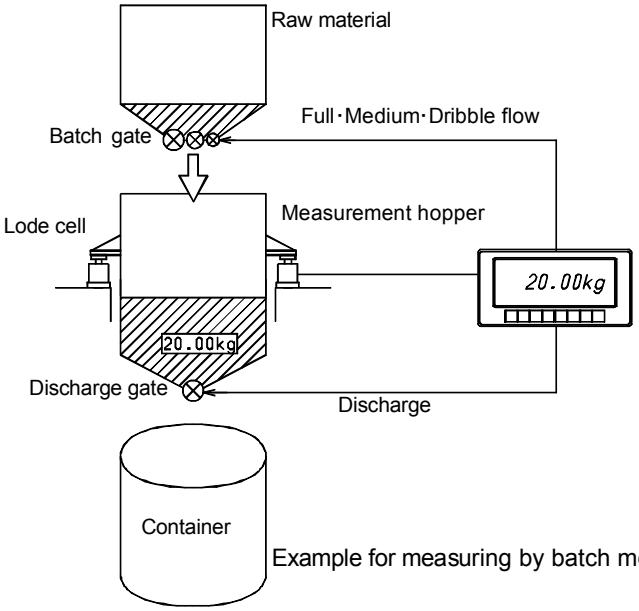

Example for measuring by batch mode

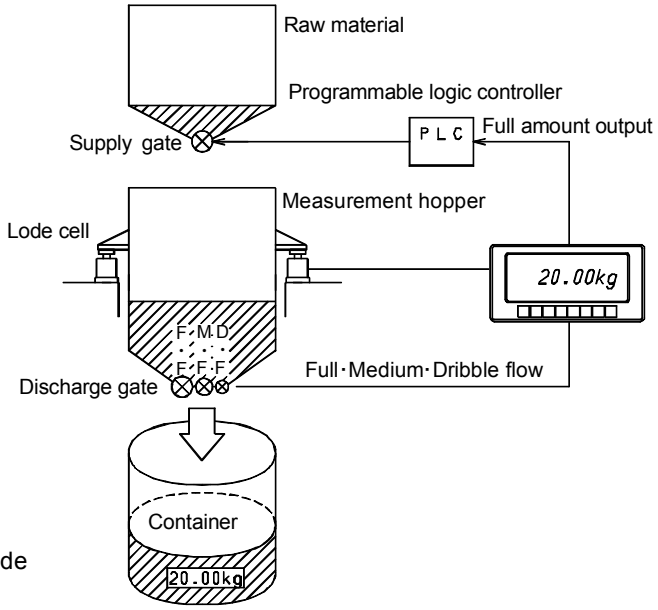

Example for measuring by discharge mode

Please control the supply of the raw material to the measurement hopper while observing the full amount output by PLC etc.

The outline of each mode is as follows.

(1) Simple comparison mode

A set value and measured value are compared and whenever the comparative result satisfies the condition, the output turns on. When the gate control etc., are required, PLC etc., are needed.

As for the comparison and the judgement condition, refer to each paragraph in [9-3.Simple comparison mode].

(2) Sequential mode

The comparison of the measured value without connecting PLC, etc., outside, and the control that sets up the order of the gate control etc., can be worked.

As a result, system construction that omits PLC becomes possible.
In this mode, each output is turned ON, according to the value of each brand set with the on edge (OFF→ON) of start signal. If the set value is compared with the measurement value, and the comparison result satisfies it, then the output becomes OFF.
If the output is turned OFF once in this mode, the output is turning off until the completion signal is output, even when the comparison results become out of the condition.
Refer to each paragraph of in [9-4.Sequential mode].
In this mode, you can control in order without connecting the sequencer etc. externally.

(3) 4 steps comparator mode 1

Compare a set value and the measured value, and output the comparative result.

With four steps comparator modes 1, Turning ON or OFF the output is decided on the condition of [Under] or [Over] after comparing with a measuring value and the set value 1.

Please refer to each clause of [Clause 9-5] for more information about movement.

(4) 4 steps comparator mode 2

With four steps comparator mode 2, it is suitable for sorting measurements because the output twins on when a measurement value enters within two set points.

Please refer to each clause of [Clause 9-6] for more information about movement.

9-1. Setting method of the measurement mode

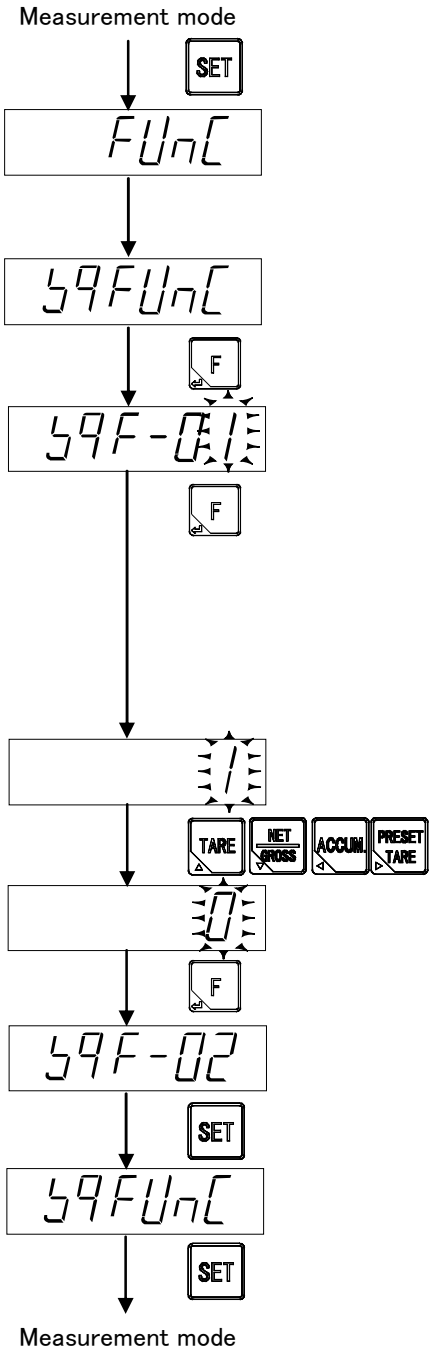

Change from the standard measurement mode to the FUnC display by the SET key.

Pressing the NET GROSS key, it displays SQFUnC and enters the mode of SQ function.

By pressing the F key, SQF-01 is displayed.
Please select SQ function number which you want to change

TARE NET GROSS: The value of changed digit is changed.

ACCUM. PRESET TARE: Changed digit is selected.

ZERO: The displayed value is changed to [0].

SET: Display returns to SQFUnC.

F: The display value is memorized, and it proceeds to the next step.

ON OFF: The SQ function mode is finished without changing all setting.

Please press the F key, and set the setting value of the selected SQF-01.

Please press the F key. The setting content is registered, and the display panel displays the following registered SQ function number.

Please continue and select the selected SQ function number when you change setting of other SQ function numbers.
If the SET key is pressed after registration is completed, it becomes SQFUnC display. Please set to the measurement mode by pressing the SET key.

Please do not change in the set value under the measurement because the A/D sampling rate decreases temporarily while rewriting the set value.

9-2. Measurement comparison value setting mode

The set value in which each measurement operation in executed in the measurement comparison value setting mode is set.

By a selected measurement mode, setting content is different.

9-2-1. Measurement comparison value 1 setting mode

The measurement comparison value used in simple comparison mode and sequential mode is set

(1) Setting method of measurement comparison value 1 setting mode

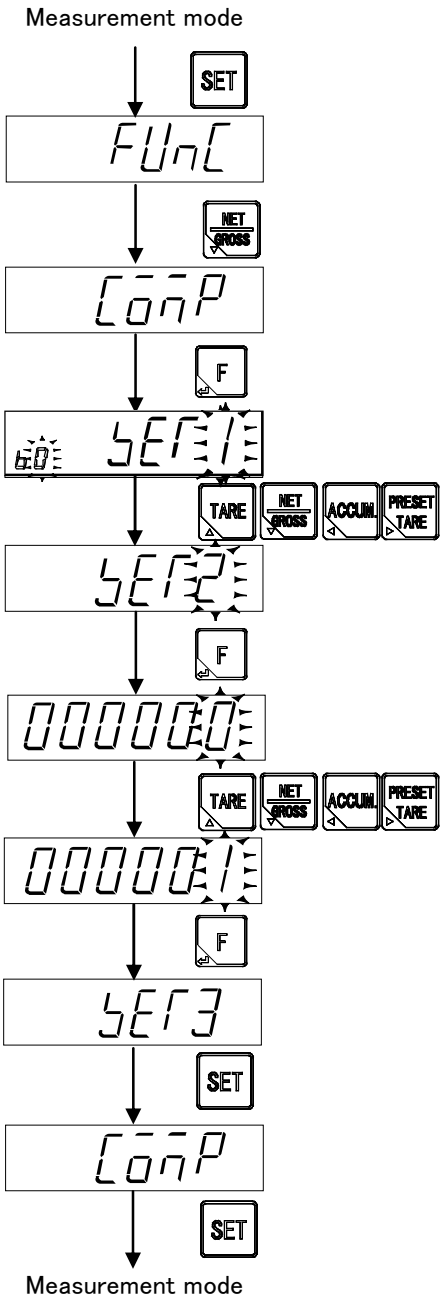

Change from the standard measurement mode to the FUnC display by the SET key.

CoMP is displayed after pressing the NET GROSS key twice, and enter into the measurement comparison value 1 setting mode.

By pressing the F key, b0 SET1 is displayed.
At this time, the corresponding display blinks linked to the display for SET1 to SET8 and B0 to B7.

TARE NET GROSS: The value of changed digit is changed.

ACCUM. PRESET TARE: Changed digit is selected.

SET: Display returns to CoMP.

F: The display value is memorized, and it proceeds to the next step.

Please press the F key, and set the setting value of the selected comparison value.
At this time, the condition display that becomes an object along with the setting of SET1 to SET8 blinks.

Please press the F key. The setting content is registered and the display panel displays the following registered measurement comparison value number.

Please continue and select the selected measurement comparison value number when you change setting of other measurement comparison value number.

If the SET key is pressed after registration is completed, it becomes SYFUnC display. Please set to the measurement mode by pressing the SET key.

Please do not change in the set value under the measurement because the A/D sampling rate decreases temporarily while rewriting the set value. Please set the storing place to the internal ROM when you change the set value during the measurement.

(2) Function of the data of measurement comparison value 1

Item	Set data No.	Set value	Contents
FINAL	SET1	000000 ~ 999999 ●000000	Unit : 1D
FREE FALL	SET2	-999999 ~ 999999 ●000000	Unit : 1D
PRELIMINARY 1	SET3	000000 ~ 999999 ●000000	Unit : 1D
PRELIMINARY 2	SET4	000000 ~ 999999 ●000000	Unit : 1D
OVER	SET5	000000 ~ 999999 ●000000	Unit : 1D
UNDER	SET6	000000 ~ 999999 ●000000	Unit : 1D
ZERO BAND	SET7	000000 ~ 999999 ●000000	Unit : 1D
FULL	SET8	000000 ~ 999999 ●000000	Unit : 1D

● Has been set as default

- Brand number

  Set the brand number.

  The brand number can be changed by pressing the ACCUM key or PRESET TARE key when b0 SET 1 is displayed.

  Setting range: 0 to 7 Unit: 1D

  Default is set to [0].

- FINAL

  Set the target value for the measurement.

  Setting range : 000000-999999 Unit : 1D

  Default is set to [000000].

- FREE FALL

  Set the target value for the free fall.

  Setting range : -999999-999999 Unit : 1D

  Default is set to [000000].

  In the simple comparison mode, when the value of [FINAL (SET1) – F.FALL (SET2)] is obtained the D.FLOW output will be ON, and in the sequential mode the D.FLOW will be OFF when arrived at the value of D.FLOW.

  The setting is [FINAL ≦ F.FALL], it becomes SQ.ERR 3. When the start signal is in putting,

- PRELIMINARY 1

  Set the value of PRELIMINARY 1.

  Setting range : 000000 ~ 999999 Unit : 1D

  Default is set to [000000].

  In the sequential mode, when the value of [FINAL (SET1)– PRELIM 1(SET3)] is obtained the M.FLOW output will be ON, and in the Simple comparative mode the D.FLOW will be OFF when arrived at the value of M.FLOW.

  When the start signal is inputting, the setting is [FINAL≦F.FALL], it becomes SQ.ERR 3.

  one before ≧ of 1 or the head is measured before the setting measures fixed quantity ≦ PRELIM1.

- PRELIMINARY 2

  Set the value of PRELIMINARY 2.

  Setting range : 000000-999999 Unit : 1D

  Default is set to [000000].

  In the sequential mode, when the value of [FINAL(SET1) – PRELIM 2(SET4)] is obtained the F.FLOW output will be ON, and in the simple comparative mode the F.FLOW will be OFF when arrived at the value of [FINAL(SET1) – PRELIM 2(SET4)].

  When the setting is [FINAL ≧ PRELIM 2] , [PRELIM 1 ≧ PRELIM 2] or [F.FLOW ≦ PRELIM 2], it becomes SQ.ERR 3 at the time of start signal is inputting.

- OVER

  Set the value of OVER.

  Setting range : 00000-99999 Unit : 1D

  Default is set to [00000]

  When the measurement result [FINAL (SET1) + OVER (SET5)] is exceeded, the over output is turned on.

- UNDER

  Set the value of UNDER.

  Setting range : 00000-99999 Unit : 1D

  Default is set to [00000].

  When the measurement result [FINAL (SET1) - UNDER (SET6)] is exceeded, the under output is turned on.

- ZERO BAND

  Set the value of Near zero.

  Setting range : 00000-99999 Unit : 1D

  Default is set to [00000].

  When the measurement result is under the value of [FINAL (SET1) - OVER (SET5)], the under output will be on.

- FULL

  Set the value of FULL.

  Setting range : 000000-999999 Unit : 1D

  Default is set to [000000]

  When the Gross weight or the Net weight exceeds the Full value, the FULL output will be ON.

Please set the stored place to the internal RAM when the set value is continuously changed, and the rewritable time of EEPROM might exceed about one million times.

9-2-2. Measurement comparison value 2 setting mode

The measurement comparison value used in four steps of comparator modes 1 and 2.

(1) Setting method of measurement comparison value 2 setting mode

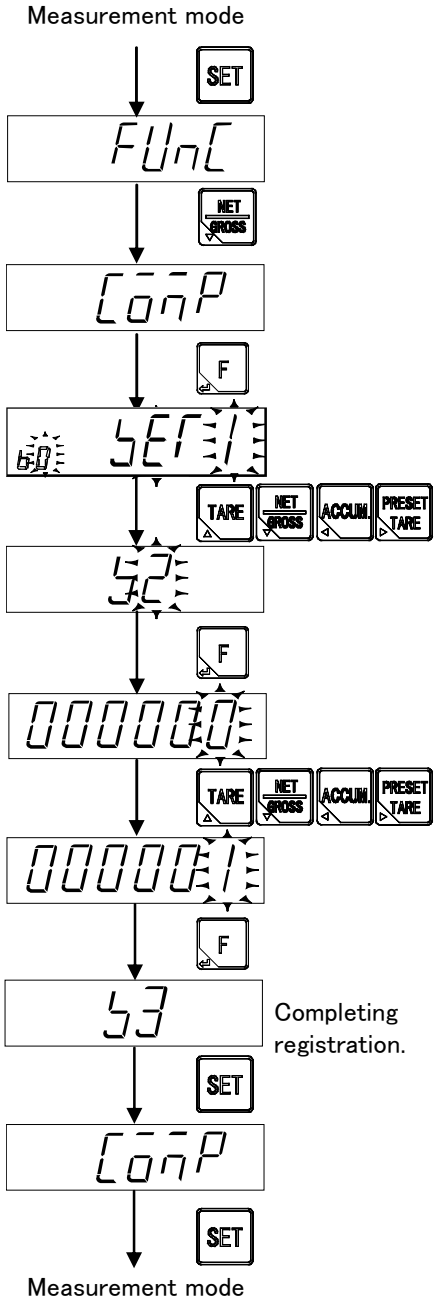

Change from the standard measurement mode to the FUnC display by the SET key.

CoMP is displayed after pressing the NET GROSS key twice, and enter into the measurement comparison value 2 setting mode.

By pressing the F key, b0 SET1 is displayed.
Change this number which you set.
At this time, the corresponding display blinks linked to the display for S1 to S4, SET7, SET8, and B0 to B7.

TARE NET GROSS: The value of changed digit is changed.
ACCUM. PRESET TARE: Changed digit is selected.
SET: Display returns to CoMP.
F: The display value is memorized, and it proceeds to the next step.

Please press the F key, and set the setting value of the selected comparison value.

Please press the F key. The setting content is registered and the display panel displays the following registered measurement comparison value number.

Please continue and select the selected measurement comparison value number when you change setting of other measurement comparison value number.

If the SET key is pressed after registration is completed, it becomes CoMP display. Please set to the measurement mode by pressing the SET key.

Please do not change in the set value under the measurement because the A/D sampling rate decreases temporarily while rewriting the set value. Please set the storing place to the internal ROM when you change the set value during the measurement.

(2) Function of the data of measurement comparison value 2

Item	Set data No.	Set value	Contents
S1	S1	-999999～999999 ●000000	Unit : 1D
S2	S2	-999999～999999 ●000000	Unit : 1D
S3	S3	-999999～999999 ●000000	Unit : 1D
S4	S4	-999999～999999 ●000000	Unit : 1D
Near zero	SET7	000000～999999 ●000000	Unit : 1D
FULL	SET8	000000～999999 ●000000	Unit : 1D

- Brand number

  Set the brand number.

  The brand number can be changed by pressing the ACCUM. key or the PRESET TARE key when bo SET 1 is displayed.

  Setting range: 0 to 7 Unit: 1D

  Default is set to [0].

- S1 to S4

  Set the value of comparator

  Setting range : -999999-999999 Unit : 1D

  Default is set to [000000].

  Operation for value is referring to 9-9. and 9-10.

- Near zero (ZERO BAND)

  Set the value that can output the signal of near zero.

  Setting range : 000000-999999 Unit : 1D

  Default is set to [000000].

  When the measurement result is under the value of (fixed value－over) , the under output will be on.

- FULL

  Set the value of FULL.

  Setting range : 000000-999999 Unit : 1D

  Default is set to [000000].

  When the Gross weight or the Net weight exceeds the Full value, the FULL output will be ON.

Please set the stored place to the internal RAM when the set value is continuously changed, and the rewritable time of EEPROM might exceed about one million times.

9-3. Simple comparison mode

The simple comparison mode includes the simple comparison batching mode and the simple comparison discharge mode.

To set the simple comparison mode, set in [9-9].

To set the batch mode and the discharge mode, set in [9-9].

9-3-1. Simple comparison batching mode

The simple comparison batching mode is a mode to output when the judgment condition is satisfied after comparing the increased value of measured value and set value of each brand at the time of measuring object is batching.

Judgment condition

Status display	Judgment condition
Z-BAND	|Gross weight or (Net weight) |≦ ZERO BAND (SET7).
F. FLOW	Net weight ≧ [Final (SET1) – Prelim 2 (SET4)]
M. FLOW	Net weight ≧ [Final (SET1) – Prelim 1 (SET3)]
D. FLOW	Net weight ≧ [Final (SET1) – Free Fall (SET2)]
UNDER	Net weight ＜ [Final (SET1) – Under (SET6)]
OVER	Net weight ＞ [Final (SET1) + Over (SET5)]
OK	[Final (SET1) – Under (SET6) ≦ Net weight ≦ Final (SET1) + Over (SET5)]

Operating explanation

1) When the - net weight becomes the value of [Final value - Prelim 2] the output of Full flow will be ON. And when the start signal is applied, the comparison among Full flow, Medium flow and Dribble flow will be prohibited during the Medium flow comparison prohibited time.
2) When the - net weight becomes the value of [Final value - Prelim 1] the output of Medium flow will be ON. And when the start signal is applied, the comparison among Full flow, Medium flow and Dribble flow will be prohibited during the Dribble flow comparison prohibited time.
3) When the net weight becomes [Final － Free Fall], then the output of Dribble flow will be ON
4) When the start signal is used, the completion signal will be output.

- The comparative target of near zero and the comparative target of FULL value can be selected from Gross weight and Net weight.
- Under, Over and OK can be operated with Net weight.
  The comparison operation can be changed to simple comparison.
- At the time of setting [Prelim 2=0], the Full flow becomes OFF and at the time of setting [Prelim 1=0], becomes Medium flow OFF.

・In the case of no use of Start signal, each Condition display will become ON/OFF according to the Judgment condition shown above.
・Renewing the output of each condition display is synchronizing with A/D sampling rate.

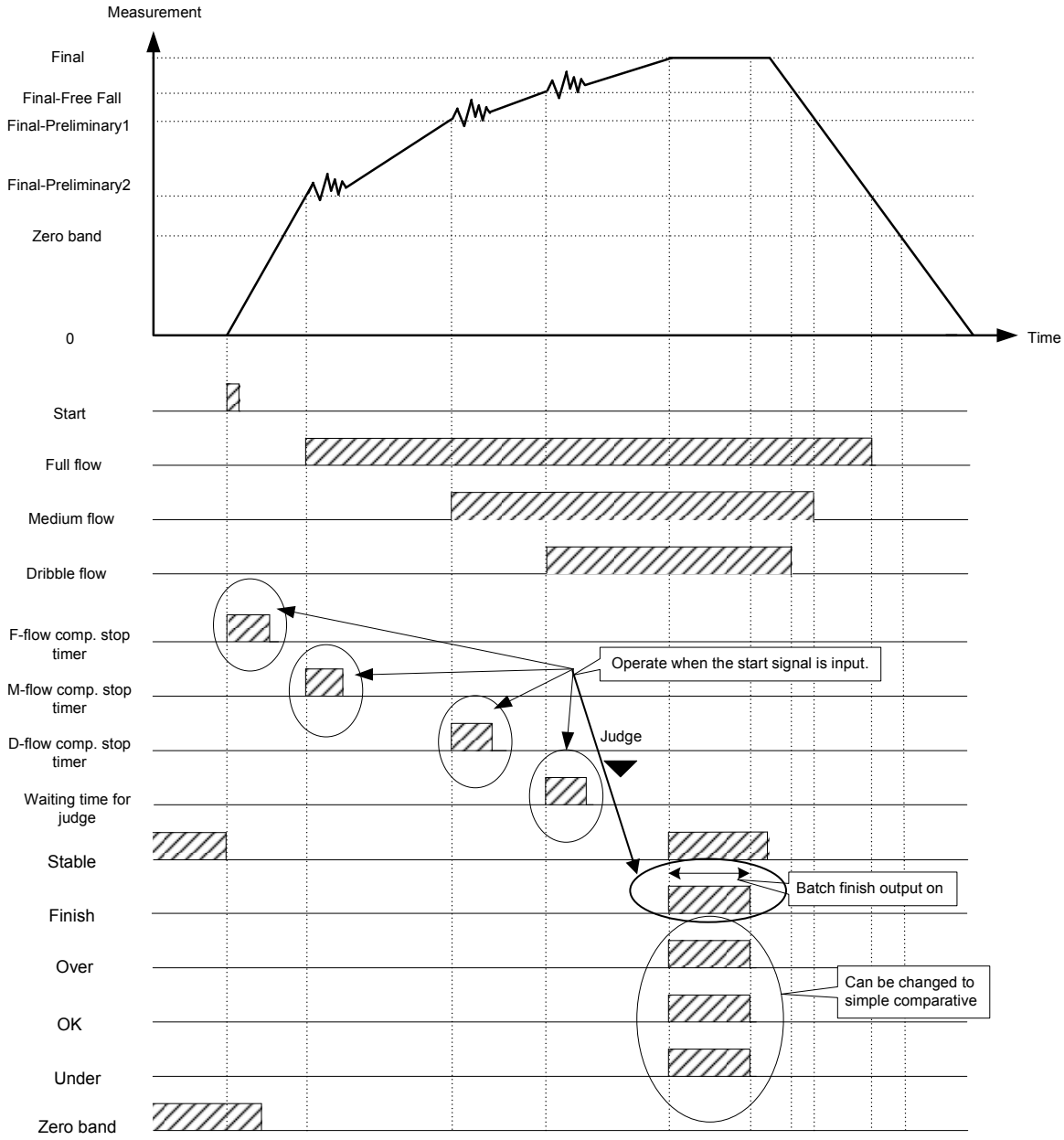
Measurement
Final
Final-Free Fall
Final-Preliminary1
Final-Preliminary2
Zero band
0
Time
Start
Full flow
Medium flow
Dribble flow
F-flow comp. stop timer
M-flow comp. stop timer
D-flow comp. stop timer
Waiting time for judge
Stable
Finish
Over
OK
Under
Zero band
Operate when the start signal is input.
Judge
Batch finish output on
Can be changed to simple comparative

9-3-2. Simple comparison discharging mode

The simple comparison discharging mode is a mode to output when the judgment condition is satisfied after comparing the decreased value of measured value and set value of each brand at the time of measuring object is discharging.

Judgment condition

Status display	Judgment condition
Z-BAND	|Gross weight or (Net weight) |≦ ZERO BAND (SET7).
F. FLOW	- Net weight ≧ [Final (SET1) – Prelim 2 (SET4)]
M. FLOW	- Net weight ≧ [Final (SET1) – Prelim 1 (SET3)]
D. FLOW	- Net weight ≧ [Final (SET1) – Free Fall (SET2)]
UNDER	- Net weight ＜ [Final (SET1) – Under (SET6)]
OVER	- Net weight ＞ [Final (SET1) + Over (SET5)]
OK	[Final (SET1) – Under (SET6) ≦ - Net weight ≦ Final (SET1) + Over (SET5)]

Operating explanation

1) When the - net weight becomes the value of [Final value - Prelim 2] the output of Full flow will be ON. And when the start signal is applied, the comparison among Full flow, Medium flow and Dribble flow will be prohibited during the Medium flow comparison prohibited time.
2) When the - net weight becomes the value of [Final value - Prelim 1] the output of Medium flow will be ON. And when the start signal is applied, the comparison among Full flow, Medium flow and Dribble flow will be prohibited during the Dribble flow comparison prohibited time.
3) When the - net weight becomes [Final – Free Fall], then the output of Dribble flow will be ON.
4) When the start signal is used, the completion signal will be output.

- The comparative target of near zero and the comparative target of FULL value can be selected from Gross weight and Net weight.
- Under, Over and OK can be operated with Net weight.
  The comparison operation can be changed to simple comparison.
- At the time of setting [Prelim 2=0], the Full flow becomes OFF and ant the time of setting [Prelim 1=0], becomes Medium flow OFF.

- **In the case of no use of Start signal, each Condition display will become ON/OFF according to the Judgment condition shown above.**
- **Renewing the output of each condition display is synchronizing with A/D sampling rate.**

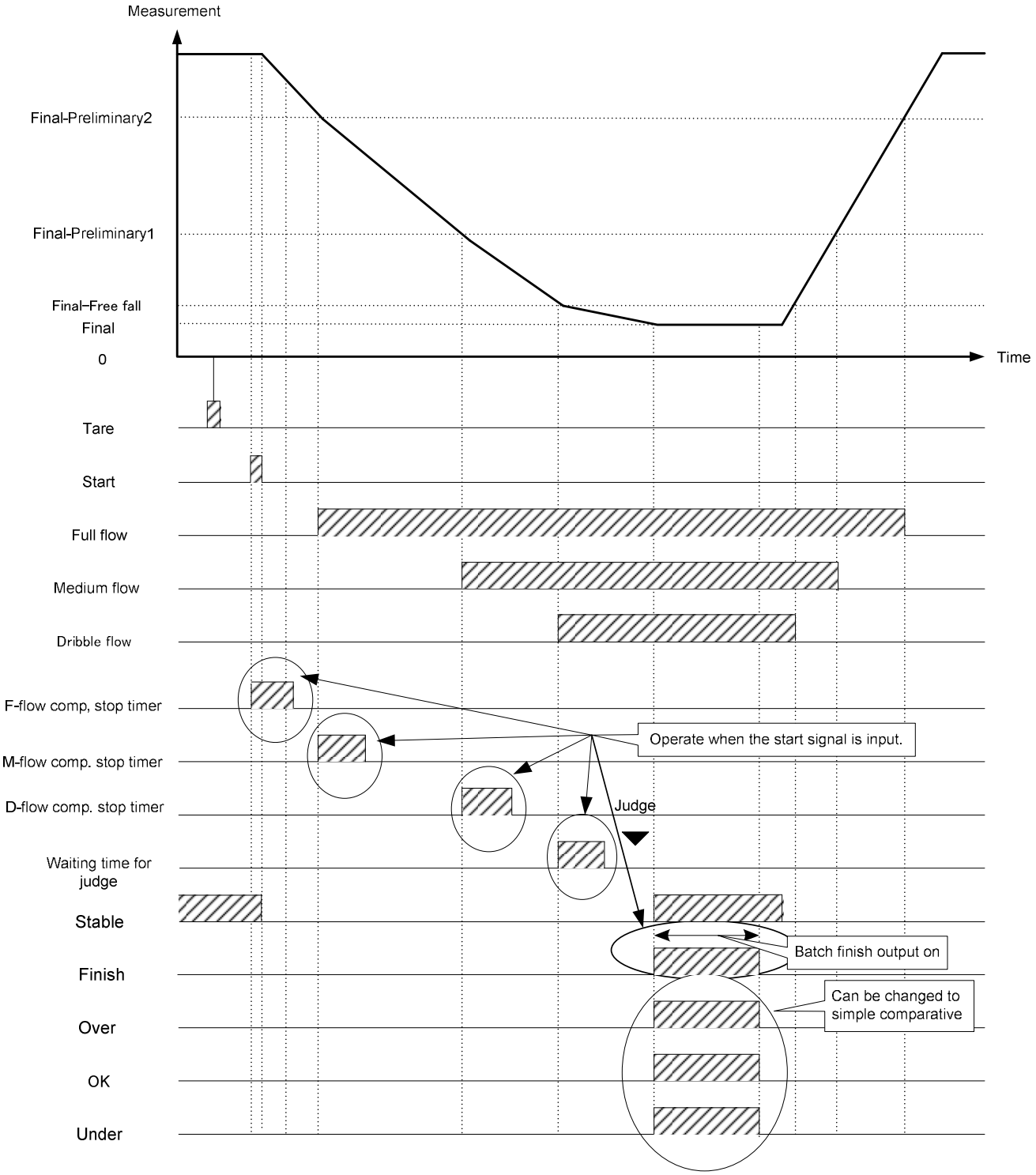
Measurement
Final-Preliminary2
Final-Preliminary1
Final–Free fall
Final
0
Time
Tare
Start
Full flow
Medium flow
Dribble flow
F-flow comp, stop timer
M-flow comp. stop timer
D-flow comp. stop timer
Waiting time for judge
Stable
Finish
Over
OK
Under
Operate when the start signal is input.
Judge
Batch finish output on
Can be changed to simple comparative

9-4. Sequential mode

The sequential mode includes the sequential batching mode and the sequential discharge mode. Moreover, Supplementary batching, Initial batching, Nuzzle batching and automatic free flow compensation can be set if necessity requires.

9-4-1. Sequential batching mode

The sequential batching mode is a mode to control the measurement sequence depending to the increased value of measuring value when the raw material is batching in.

Judgment condition

Status display	Judgment condition
Z-BAND	|Gross weight or (Net weight) |≦ ZERO BAND (SET7).
F. FLOW	Net weight ≧ [Final (SET1) – Prelim 2 (SET4)]
M. FLOW	Net weight ≧ [Final (SET1) – Prelim 1 (SET3)]
D. FLOW	Net weight ≧ [Final (SET1) – Free Fall (SET2)]
UNDER	Net weight ＜ [Final (SET1) – Under (SET6)]
OVER	Net weight ＞ [Final (SET1) + Over (SET5)]
OK	[Final (SET1) – Under (SET6) ≦ Net weight ≦ Final (SET1) + Over (SET5)]

Operating explanation

1) When the start signal is input, the Full flow, Medium flow and Dribble flow will be ON.
   Moreover, tare weight cancellation is provided with the input of start signal with the setting at the same time.
2) When the net weight becomes [Final value – Prelim 2], the output of Full flow becomes OFF.
3) When the net weight becomes [Final value – Prelim 1], the output of Medium flow becomes OFF.
4) When the net weight becomes [Final value – Free Fall], the output of Dribble flow becomes OFF.

- The comparative target of near zero can be selected from Gross weight and Net weight.
- The near zero will become simple comparison operation.
- The Full flow, Medium flow and Dribble flow will never become ON until the next start signal will be input, once it becomes OFF.
- Under, Over and OK can be operated with Net weight.
  The comparison operation can be changed to simple comparison.
- At the time of setting [Prelim 2=0], the Full flow becomes OFF and at the time of setting [Prelim 1=0], Medium flow becomes OFF.
- When making the automatic tare cancellation at the time of flow start, set to [Effective] for [Automatic tare cancellation at the time of flow start] after referring to [9-9. Function of the SQ function data].

Renewing the output of each condition display is synchronizing with A/D sampling.

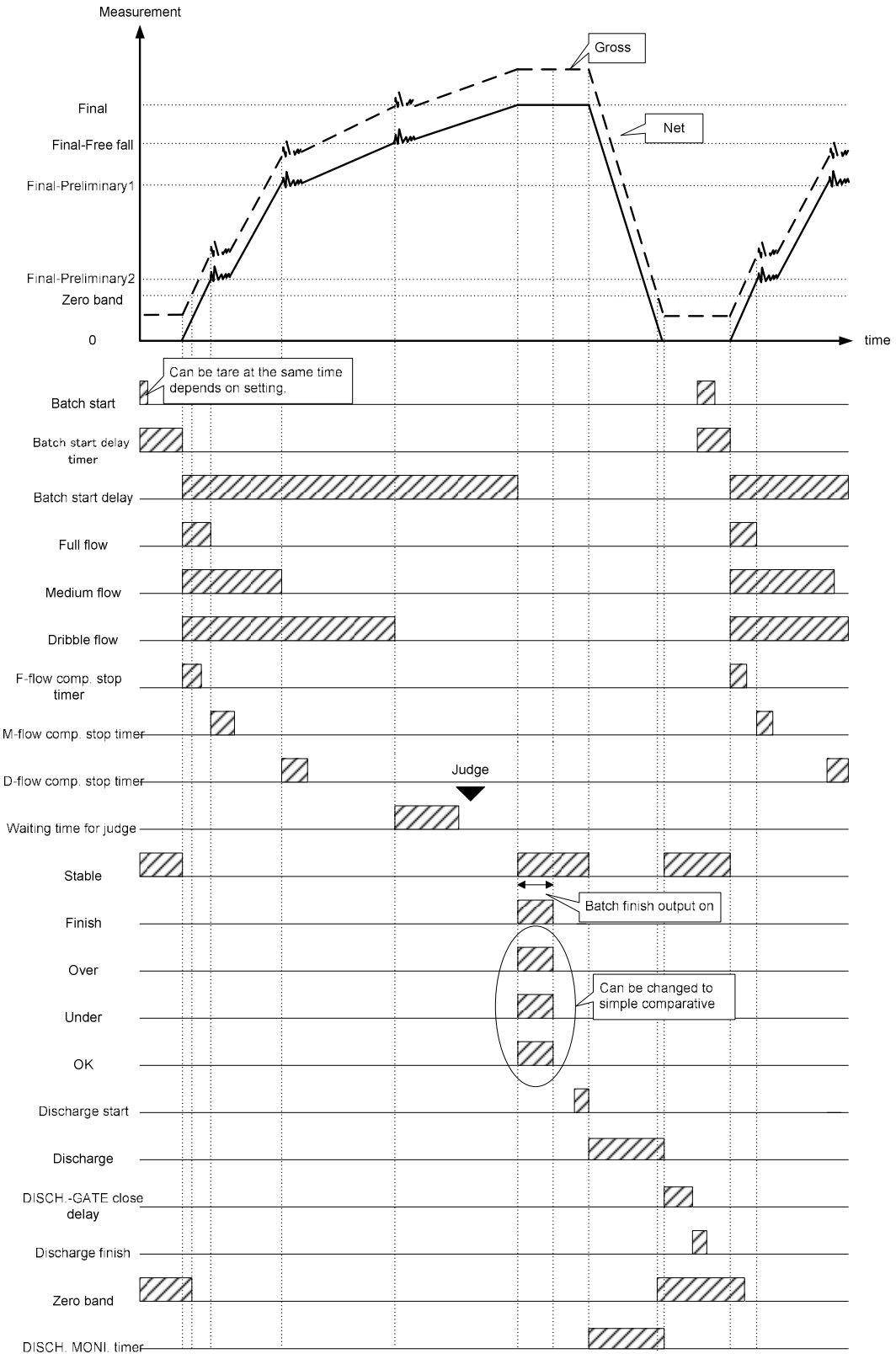
Measurement
Gross
Net
Final
Final-Free fall
Final-Preliminary1
Final-Preliminary2
Zero band
0
time
Can be tare at the same time depends on setting.
Batch start
Batch start delay timer
Batch start delay
Full flow
Medium flow
Dribble flow
F-flow comp. stop timer
M-flow comp. stop timer
D-flow comp. stop timer
Judge
Waiting time for judge
Stable
Batch finish output on
Finish
Over
Under
Can be changed to simple comparative
OK
Discharge start
Discharge
DISCH.-GATE close delay
Discharge finish
Zero band
DISCH. MONI. timer

9-4-2. Sequential batching mode

The sequential batching mode is a mode to control the measurement sequence by the decrease value of measured value when the measuring object is batching out.

Judgment condition

Status display	Judgment condition
Z-BAND	|Gross weight or (Net weight) |≦ ZERO BAND (SET7).
F. FLOW	- Net weight ≧ [Final (SET1) – Prelim 2 (SET4)]
M. FLOW	- Net weight ≧ [Final (SET1) – Prelim 1 (SET3)]
D. FLOW	- Net weight ≧ [Final (SET1) – Free Fall (SET2)]
UNDER	- Net weight ＜ [Final (SET1) – Under (SET6)]
OVER	- Net weight ＞ [Final (SET1) + Over (SET5)]
OK	[Final (SET1) – Under (SET6) ≦ - Net weight ≦ Final (SET1) + Over (SET5)]

Operating explanation

1) When the start signal is input, the Full flow, the Medium flow and the Dribble flow turns ON. Moreover, tare weight cancellation is provided with the input of start signal with the setting at the same time.
2) When the net weight is the value of [Final value - Prelim 2], the output of Full flow becomes OFF.
3) When the net weight is the value of [Final value - Prelim 1], the output of Medium flow becomes OFF.
4) When the net weight is the value of [Final – Free Fall], the output of Dribble flow becomes OFF.

- The comparative target of near zero can be selected from Gross weight and Net weight.
- The near zero will become simple comparison operation.
- The Full flow, Medium flow and Dribble flow will never become ON until the next start signal will be input, once it becomes OFF.
- Under, Over and OK can be operated with Net weight.
  The comparison operation can be changed to simple comparison.
- At the time of setting [Prelim 2=0], the Full flow becomes OFF and at the time of setting [Prelim 1=0], Medium flow becomes OFF.
- When making the automatic tare cancellation at the time of flow start, set to [Effective] for [Automatic tare cancellation at the time of flow start] after referring to [9-9. Function of the SQ function data].

Renewing the output of each condition display is synchronizing with A/D sampling.

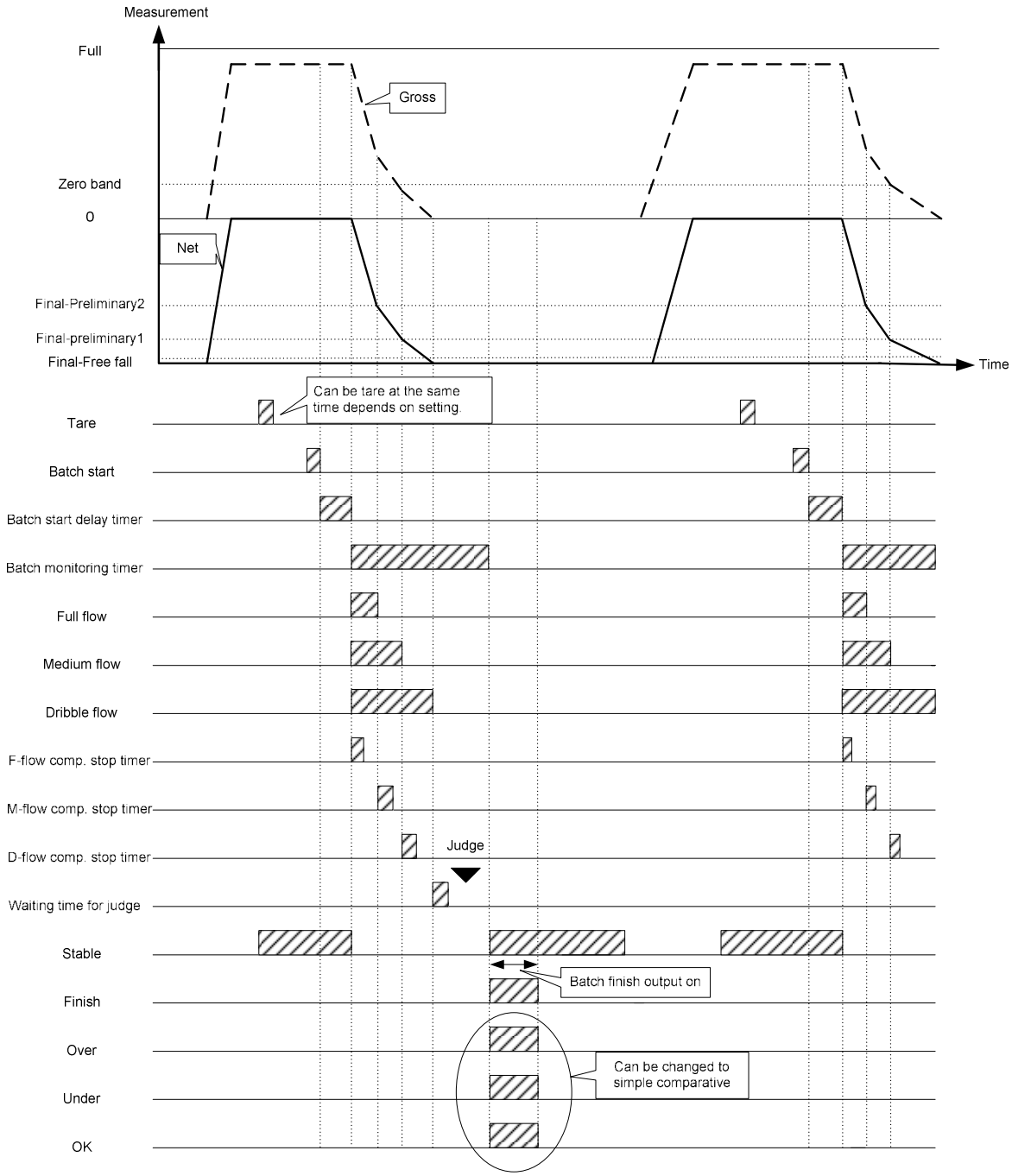
Measurement
Full
Gross
Zero band
0
Net
Final-Preliminary2
Final-preliminary1
Final-Free fall
Time
Can be tare at the same time depends on setting.
Tare
Batch start
Batch start delay timer
Batch monitoring timer
Full flow
Medium flow
Dribble flow
F-flow comp. stop timer
M-flow comp. stop timer
D-flow comp. stop timer
Judge
Waiting time for judge
Stable
Batch finish output on
Finish
Over
Under
OK
Can be changed to simple comparative

9-4-3. Supplementary Batch (discharge) mode

Supplementary batch (discharge) is a function to make the Dribble batch ON automatically in fixed time, when the batch (discharge) weight becomes short in the Sequential batch (discharge) mode.

In order to execute supplementary batch (discharge), set the items of [Maximum times of supplementary flow], [Time of supplementary batch] and [Waiting time after supplementary batch] after referring to [9-9. Function of the SQ function data].

Judgment condition

Status display	Judgment condition
Z-BAND	|Gross weight or (Net weight) |≦ Set value of near zero(SET7).
F. FLOW	Net weight ≧ [Final (SET1) – Prelim 2 (SET4)]
M. FLOW	Net weight ≧ [Final (SET1) – Prelim 1 (SET3)]
D. FLOW	Net weight ≧ [Final (SET1) – Free Fall (SET2)]
UNDER	Net weight ＜ [Final (SET1) – Under (SET6)]
OVER	Net weight ＞ [Final (SET1) + Over (SET5)]
OK	[Final (SET1) – Under (SET6) ≦ Net weight ≦ Final (SET1) + Over (SET5)]

Operating explanation

1) When the start signal is input, the Full flow, Medium flow and Dribble flow will be ON. Moreover, tare weight cancellation is provided with the input of start signal with the setting at the same time.
2) When the net weight is the value of [Final value – Prelim 2], the output of Full flow becomes OFF.
3) When the net weight is the value of [Final value – Prelim 1], the output of Medium flow becomes OFF.
4) When the net weight is the value of [Final – Free Fall], the output of Dribble flow becomes OFF.
5) After completing the Dribble flow, the supplementary flow starts when the [Under] signal is output in stable time. The time of this supplementary flow will become the set time in SQ function (SQF-35).
6) The supplementary flow can be made with the set times of maximum times of supplementary flow described in the (8-9-2. The item of Sequence control setting). When the Under signal can't be output at less times than the set value, then the supplementary flow shall be finished at the time.
7) The Under signal is output even if the supplementary flow is applied with the same times of the maximum supplementary flow, it will become the sequence error (SQ ERR2)

- The comparative target of near zero can be selected from Gross weight and Net weight.
- The near zero will become simple comparison operation.
- The Full flow, Medium flow and Dribble flow will never become ON until the next start signal will be input, once it becomes OFF.
- Under, Over and OK can be operated with Net weight.
  The comparison operation can be changed to simple comparison.
- At the time of setting [Prelim 2=0], the Free flow becomes OFF and at the time of setting [Prelim 1=0], Medium flow becomes OFF.
- When making the automatic tare cancellation at the time of flow start, set to [Effective] for [Automatic tare cancellation at the time of flow start] after referring to [9-9. Function of the SQ function data].

Renewing the output of each condition display is synchronizing with A/D sampling.

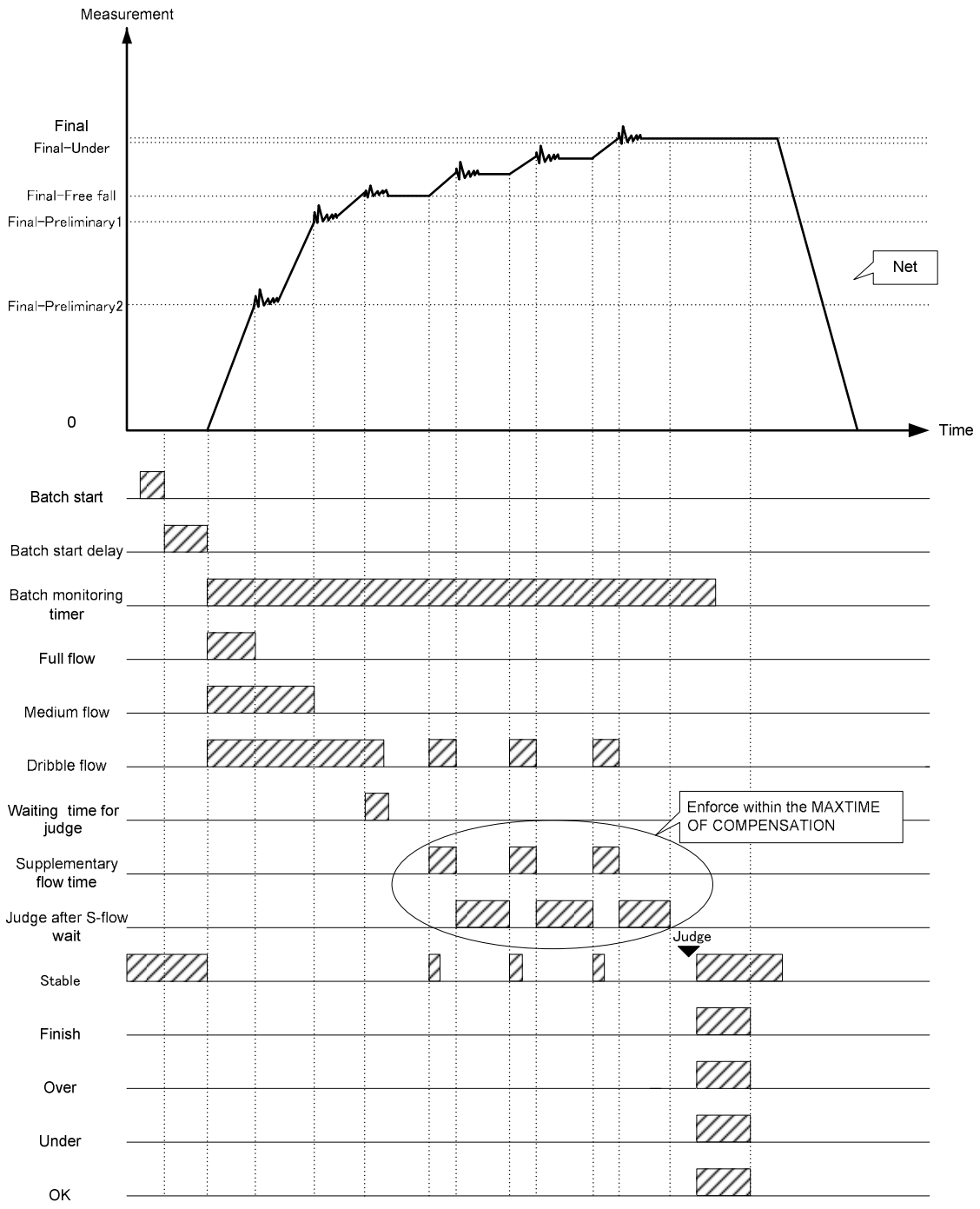
Measurement
Final
Final-Under
Final-Free fall
Final-Preliminary1
Final-Preliminary2
0
Net
Time
Batch start
Batch start delay
Batch monitoring timer
Full flow
Medium flow
Dribble flow
Waiting time for judge
Supplementary flow time
Judge after S-flow wait
Stable
Finish
Over
Under
OK
Enforce within the MAXTIME OF COMPENSATION
Judge

9-4-4. Automatic Free Fall correction

This is a function to guess the next Free Fall from a former actual Free Fall, and to set the value of the Free Fall automatically when the measurement is operated continuously.

Set data of the next Free Fall uses the moving averaged value calculated from 4 times of actual former Free Fall values.

When using the function, set the Automatic Free Fall correction to [VALID] and set the value of [Automatic Free Fall effective width] by referring to the [9-9. Function of the SQ function data].

When the Batch error (= |measured value - FINAL value|) is exceeded to the Automatic Free Fall effective width set, it is treated as invalid data, and the Automatic Free Fall calculation is not operated.

When the value of automatic Free Fall effective width is 0, an Automatic Free Fall calculation will not be operated.

The Automatic Free Fall correction shall be cleared when the change of set value or at the time of power supply OFF.

Renewing the output of each condition display is synchronizing with A/D sampling.

9-5. 4 steps comparator mode 1

In 4 steps comparator mode, maximum four comparison values and measured value can be compared and output the results. Please set SQ function, SQF-01 to [2] to use this mode.
The setting value of each brand number of 4-steps comparator mode can be set by switching F-20: Comparator brand setting target. (Targeted function is from F21 to F26.)

Renewing the output of each comparator is synchronizing with A/D sampling.

9-5-1. Operation on comparator S1, S2, S3 and S4

Each operating condition of the comparator mode for S1, S2, S3 and S4 is selectable from [Set value or more] and [Set value or less].
These selections are executed in the Function mode (F-22).
Default of S1, S2, S3 and S4 is all set to [Set value or more].

- **Depending on operational selection for comparator, ON/OFF condition for each output may differ. If wrong mode is selected, ON/OFF condition for output becomes inadequate and it may cause an unexpected accident due to malfunction on peripheral instruments, so care should be taken fully.**
- **The set point of S1, S2, S3, and S4 becomes common with four steps comparator modes 1 and four steps comparator modes 2.**

As for sample at S1, the operation at comparison value for every comparative target and also the operation of output will be shown as follows:
Same are the case of S2, S3 and S4.

(1) [Set value or more] is selected.
S1 output turns ON at S1 set value≦Comparison value

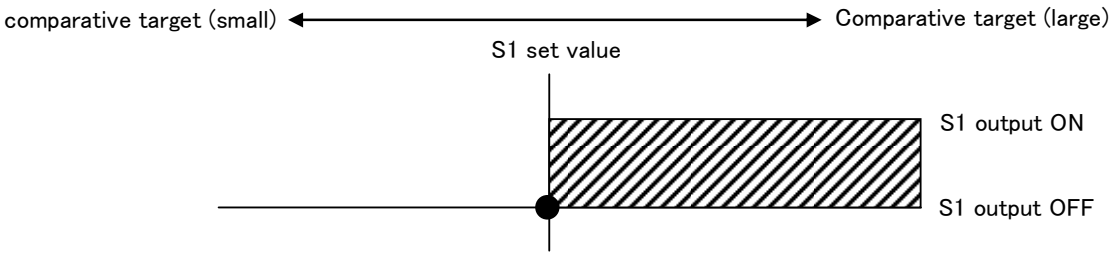

(2) [Set value or less] is selected.
S1 output turns ON at S1 set value≧Comparison value

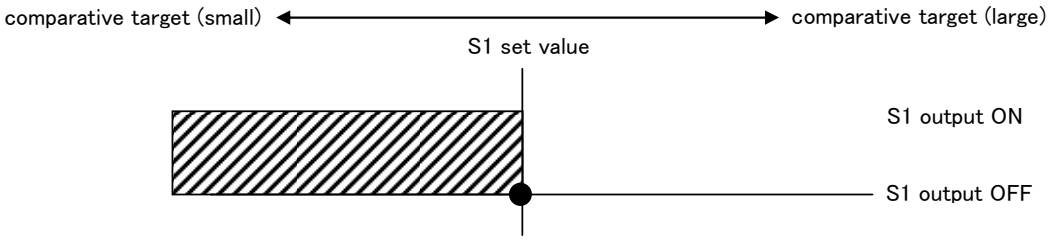

9-5-2. Comparative target for comparator S1, S2, S3 and S4

The comparator in this mode, S1, S2, S3 and S4 individually can select the comparative target from [Display interlock], [NET] and [GROSS].

These selections can be made in the Function mode (F-21).

Default is set to [Set value or more] for every S1, S2, S3 and S4.

Depending on operational selection for comparator, ON/OFF condition for each output may differ. If wrong mode is selected, ON/OFF condition for output becomes inadequate and it may cause an unexpected accident due to malfunction on peripheral instruments, so care should be taken fully.

As for sample at S1, the operation at comparison value for every comparative target and also the operation of output will be shown as follows:

Same are the case of S2, S3 and S4.

(1) [Display interlock] is selected

S1 output turns ON at S1 set value≦Load display value.

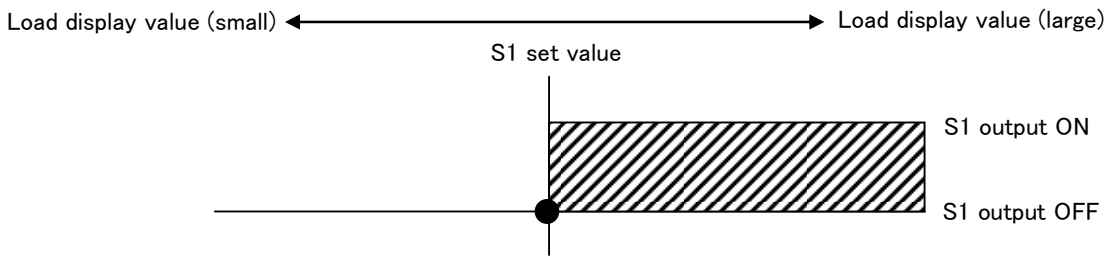

(2) [Gross weight] is selected.

S1 output turns ON at S1 set value≦Gross weight.

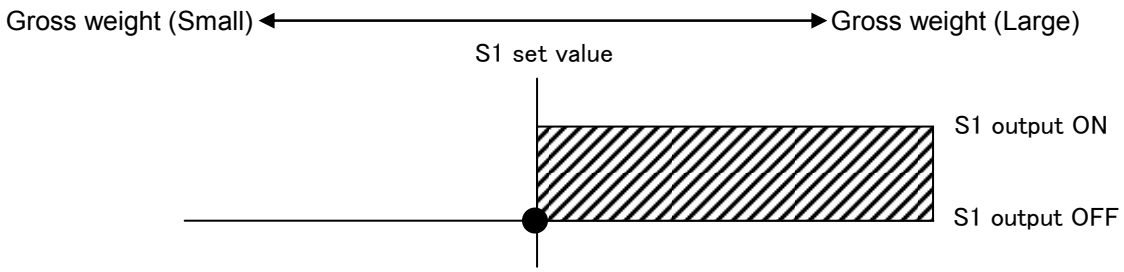

(3) [Net weight] is selected.

S1 output turns ON at S1 set value≦Gross weight.

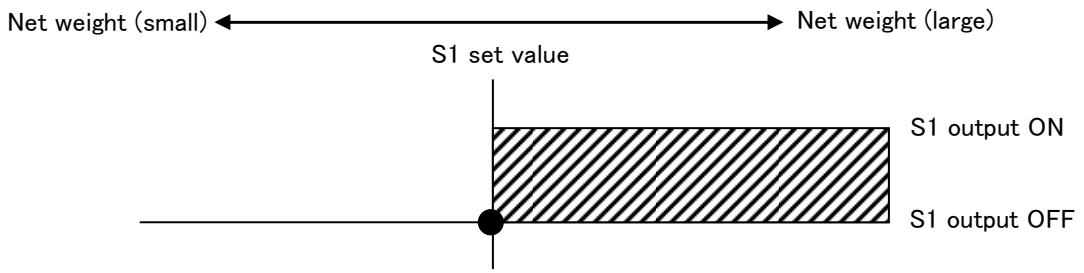

9-5-3. Operation of comparator S0

The comparator S0 in this mode can select one operation among eight operations.
This selection can be made in Function mode (F-23).
Default is set to [Always off].

Depending on operational selection for comparator, ON/OFF condition for each output may differ. If wrong mode is selected, ON/OFF condition for output becomes inadequate and it may cause an unexpected accident due to malfunction on peripheral instruments, so care should be taken fully.

The operation of S0 output is shown at the time of whichever setting with F-23.

Setting with F-23.	Operation
0	Always OFF
1	Turns ON when both outputs of S1 and S2 are OFF
2	Turns ON when both outputs of S1 and S3 are OFF
3	Turns ON when both outputs of S1 and S4 are OFF
4	Turns ON when both outputs of S2 and S3 are OFF
5	Turns ON when both outputs of S2 and S4 are OFF
6	Turns ON when both outputs of S3 and S4 are OFF
7	Turns ON when (Gross weight) ≧ (Weighing capacity)

In the next, as for the sample, the operation at S0 output selected [1] with F-23 among [1] to [6] will be shown as below.
Same operation will be performed when [2] to [6] with F-23.

(1) When the both of S1 and S2 select [Set value or more] with the Function F−22.
S1 output ON at S1 set value ≦ Comparison value
S2 output ON at S2 set value ≦ Comparison value
S0 output ON at S1 set value ＞ Comparison value and also S2 set value ＞ Comparison value at the same time

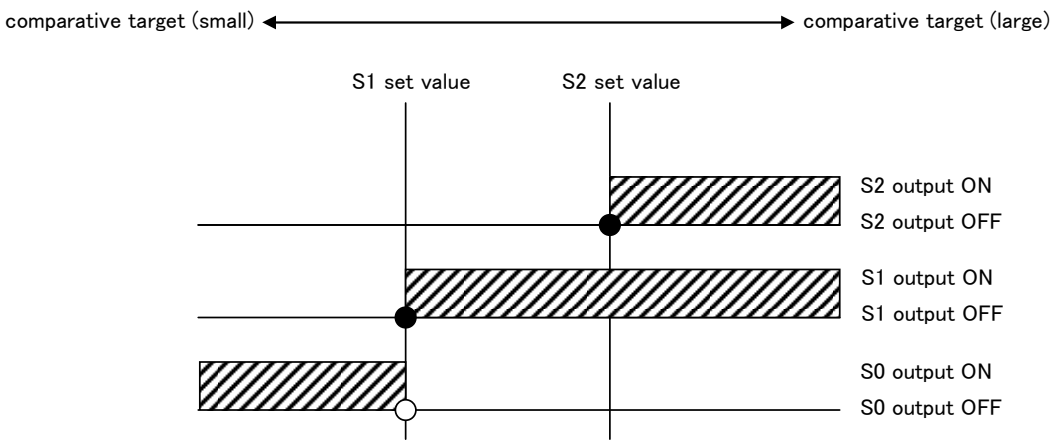

(2) When S1 selects [Set value or less] and S2 selects [Set value or more] with the Function F−22.
S1 output ON at S1 set value ≧ comparison value
S2 output ON at S2 set value ≦ comparison value
S0 output ON at S1 set value ＜ comparison value ＜ S2 set value

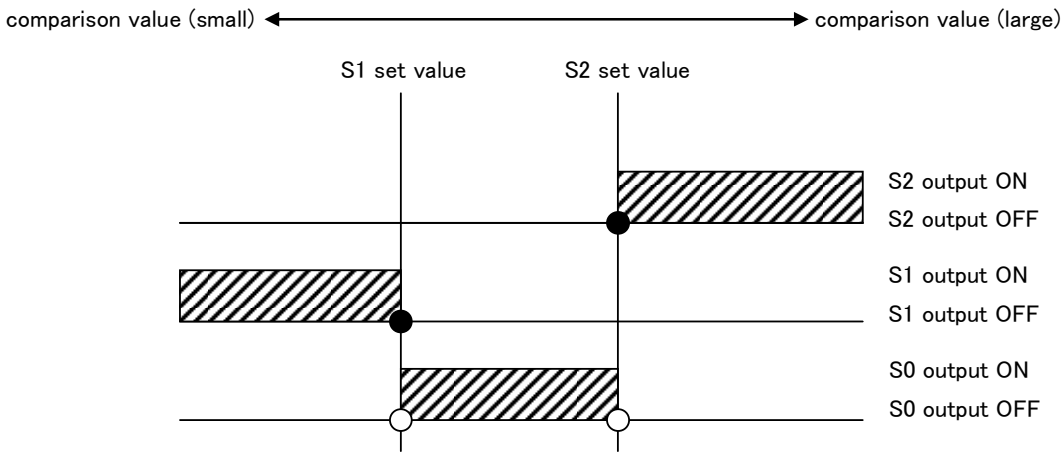

Above figure shows the case of S1 set value ＜ S2 set value.
In case of S1 set value ≧ S2 set value, S0 output will always be OFF.

(3) When the S1 selects [Set value or less] and the S2 selects [Set value or more] with Function F−22.
S1 output ON at S1 set value ≧ Comparison value
S2 output ON at S2 set value ≦ Comparison value
S0 output ON at S1 set value ＜ Comparison value ＜ S2 set value

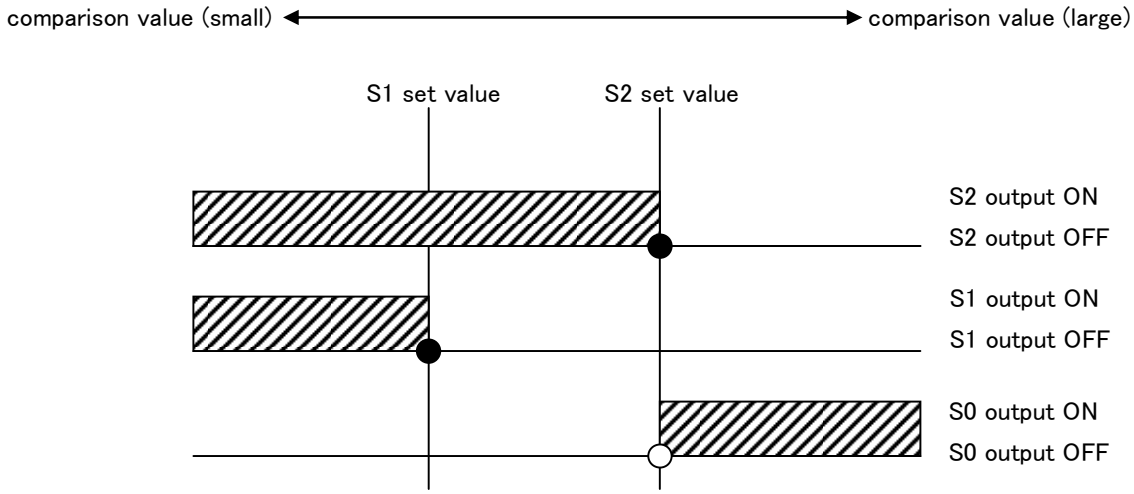

9-5-4. Hysteresis on comparator

The comparator S1, S2, S3 and S4 in the instrument can set hysteresis for prevention from chattering at output relay.

Hysteresis can be used by the combined of data width and time width. Moreover, effective direction for hysteresis can be selected from either [OFF delay] or [ON delay].

These selections can be made in Function mode. (Related are F-24, F-25 and F-26).
Default is set to hysteresis [OFF].

Depending on the setting of comparator hysteresis, ON/OFF condition for each output way differ. It wrong mode is selected, ON/OFF condition for each output become inadequate and it may cause an unexpected accident due to malfunction on peripheral instruments, so care should be taken fully.

As for the example of S1, the operation of judgment display section when the hysteresis on comparator is set, will be shown as follows:

The same operation will be obtained in the case of [Normal mode] at S2, S3, S4 and S0.

(1) When the operation of [Set value or more] is selected at S1 and also effective direction for hysteresis is set as [On delay].

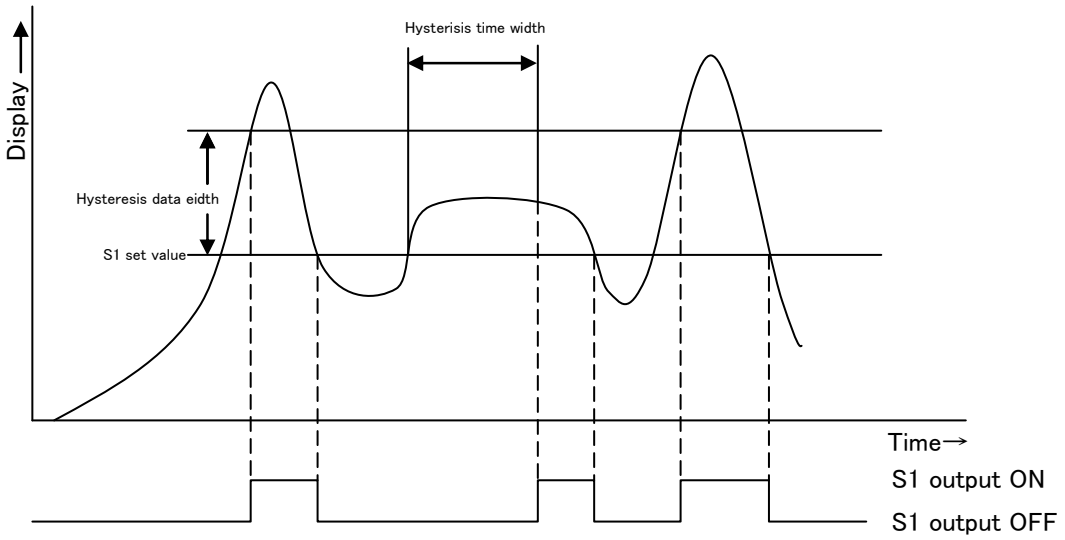

(2) When operation of [Set value or more] is selected and [OFF delay] is selected for hysteresis effective width with S1.

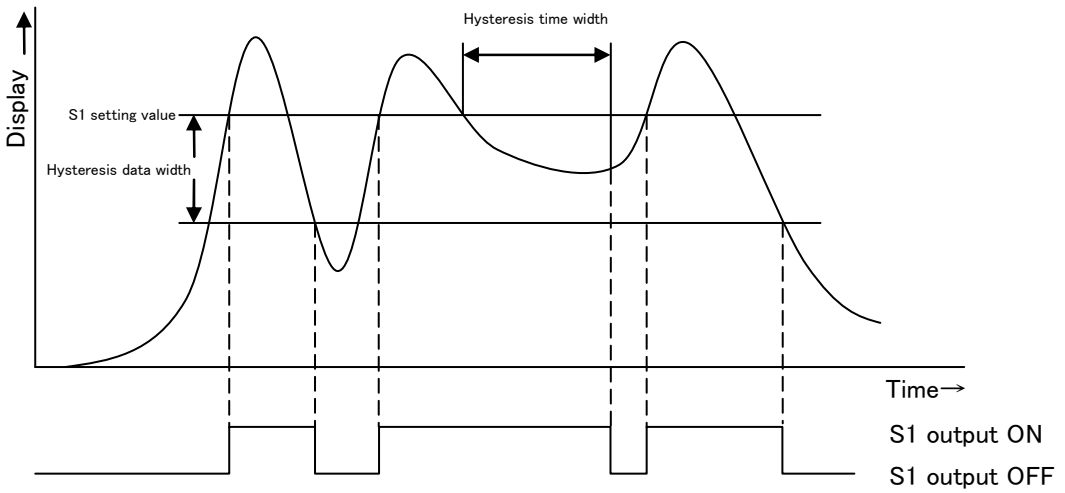

(3) When operation of [Set value or more] is selected [ON delay] is selected for hysteresis direction, with S1.

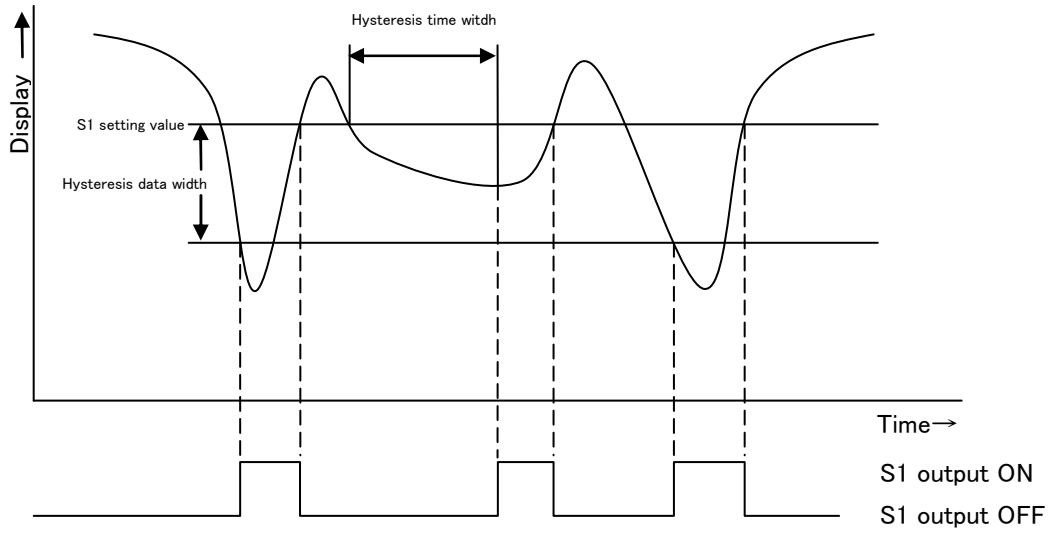

(4) When operation of [Set value or less] is selected and [OFF delay] is selected for hysteresis direction with S1.

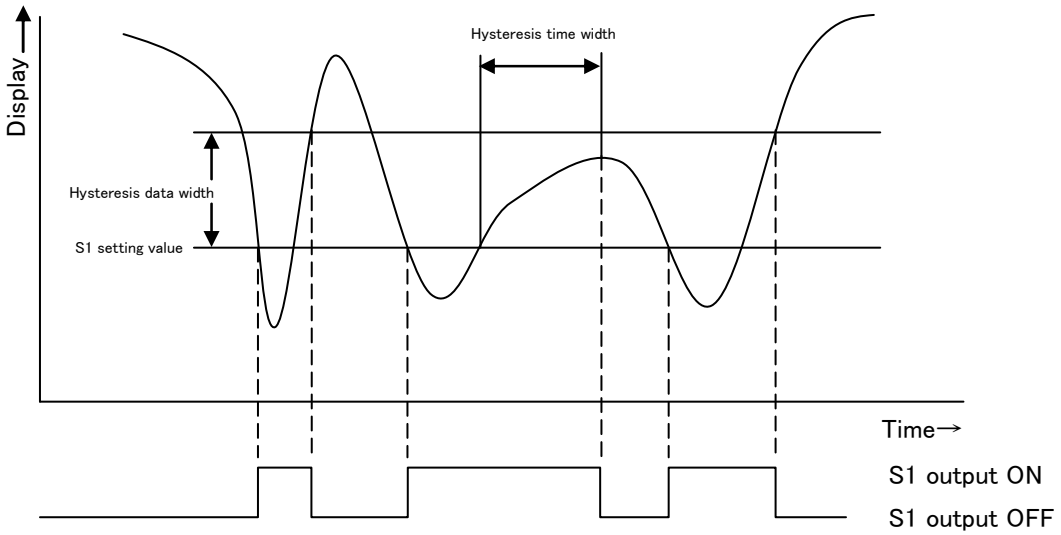

9-6. 4 steps comparator mode 2

In the measurement of the 4 steps comparator node, the comparison results from S0 to S4 is output when the measuring value is in the range of 2 set value after comparing the measuring value with from comparison values or less.

Please set SQ function, SQF-01 to [3] to use this mode.

The setting value of each brand number of 4-steps comparator mode can be set by switching F-20: Comparator brand setting target. (Targeted function is from F21 to F26.)

- **Depending on operational selection for comparator, ON/OFF condition for each output may differ. If wrong mode is selected, ON/OFF condition for output becomes inadequate and it may cause an unexpected accident due to malfunction on peripheral instruments, so care should be taken fully.**
- **The set point of S1, S2, S3, and S4 becomes common with four steps comparator modes 1 and four steps comparator modes 2.**
- **Renewing the output of each comparator is synchronizing with A/D sampling.**

9-6-1. Comparative target for comparator S1, S2, S3 and S4

The comparator in the instrument, S1, S2, S3 and S4 individually can select the comparative target from [Display interlock], [Net weight] and [Gross weight]; these selections can be made in Function mode. (Function F-21)

Default is set to [Display interlock] is selected for every S1, S2, S3 and S4.

9-6-2. Operation on comparator S1, S2, S3 and S4

In this mode, each operation of comparator S0, S1, S2, S3, and S4 is shown at the follows:

S1 output is ON in the condition that the comparison object value is smaller than S1 set value.
S2 output is ON in the condition of the S1 set point ≦ Comparison object value ＜ S2 set point.
S0 output is ON in the condition of the S2 set point ≦ Comparison object value ＜ S3 set point.
S3 output is ON in the condition of the S3 set point ≦ Comparison object value ＜ S4 set point.
S4 output is ON in the condition of the S4 set point ≦ Comparison object value.

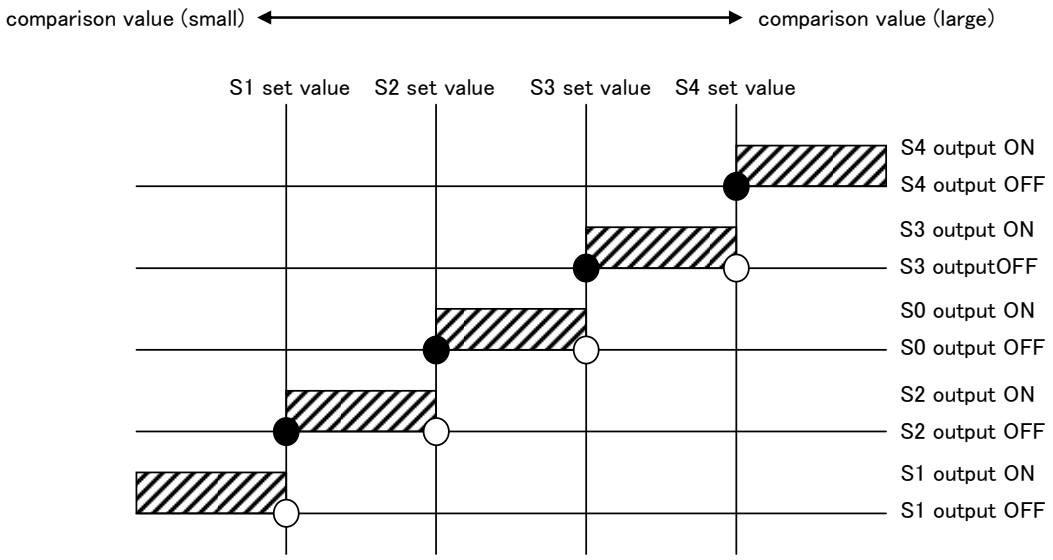

9-6-3. Hysteresis on comparator

The comparator S1, S2, S3 and S4 in the instrument can set hysteresis for prevention from chattering at output relay.

Hysteresis can be used by the combined of data width and time width. Moreover, effective direction for hysteresis can be selected from either [OFF delay] or [ON delay].

These selections can be made in Function mode. (Related are F-24, F-25 and F-26).

Default is set to hysteresis [OFF].

Depending on the setting of comparator hysteresis, ON/OFF condition for each output way differ. It wrong mode is selected, ON/OFF condition for each output become inadequate and it may cause an unexpected accident due to malfunction on peripheral instruments, so care should be taken fully.

As for the example of S1, the operation of judgment display section when the hysteresis on comparator is set, will be shown as follows:

(1) When the operation of effective direction for hysteresis is set as [On delay]

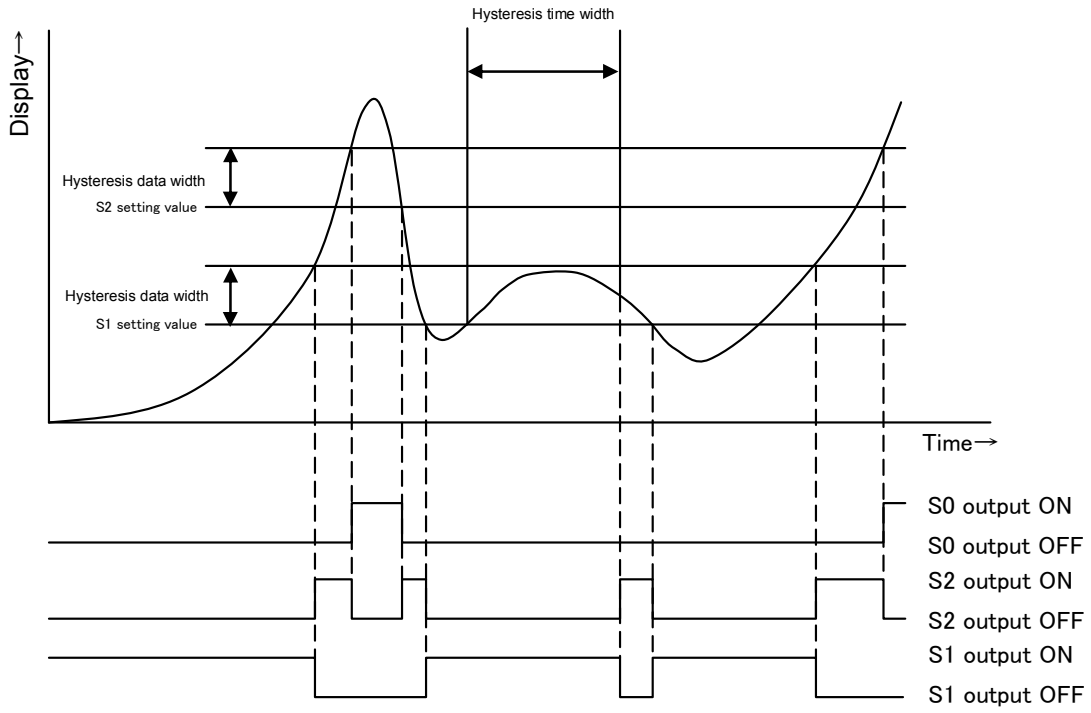

(2) When the operation of effective direction for hysteresis is set as [Off delay]

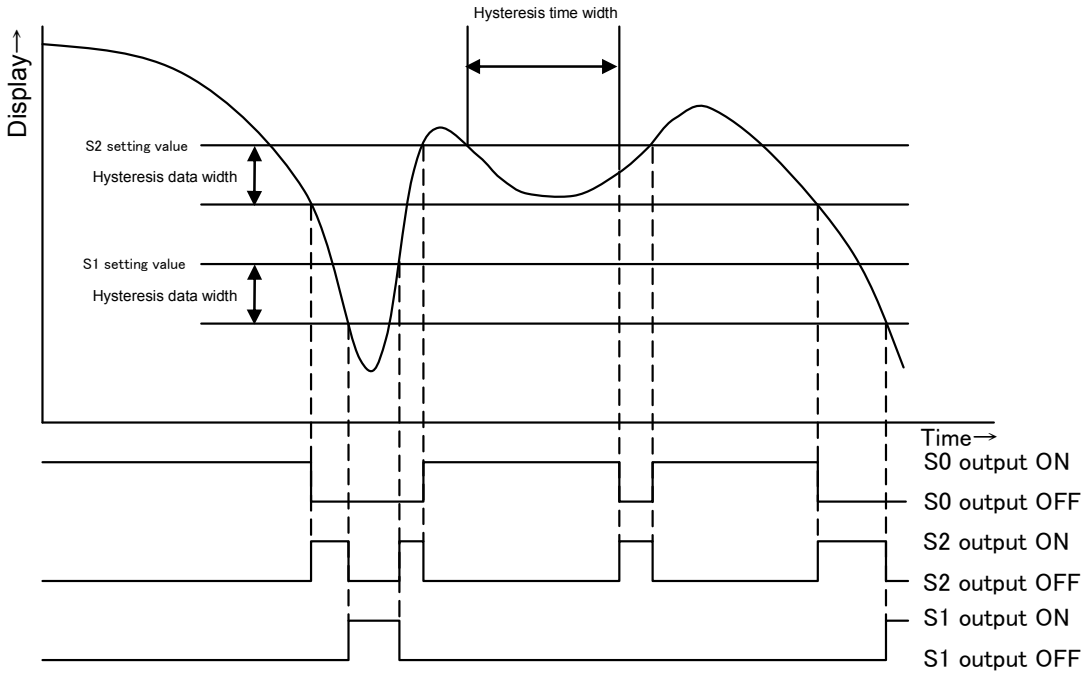

9-7. SQ function mode

The setting of SQ function data makes various functions related to the sequence operation effective.

9-8. Setting method of the SQ function mode

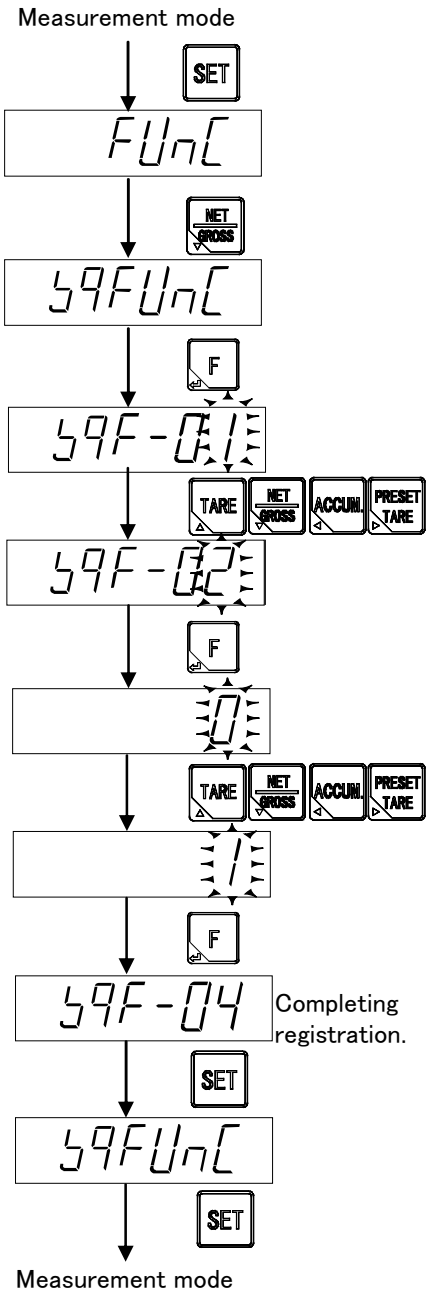

Change from the standard measurement mode to the FUnC display by the SET key.

Pressing the NET GROSS key, it displays SQFUnC and enters the mode of SQ function.

By pressing the F key, SQF-01 is displayed.
Please select SQ function number which you want to change

TARE NET GROSS: The value of changed digit is changed.

ACCUM. PRESET TARE: Changed digit is selected.

ZERO: The displayed value is changed to [0].

SET: Display returns to SQFUnC.

F: The display value is memorized, and it proceeds to the next step.

ON OFF: The SQ function mode is finished without changing all setting.

Please press the F key, and set the setting value of the selected unction number.

Please press the F key. The setting content is registered, and the display panel displays the following registered SQ function number. Please continue and select the selected SQ function number when you change setting of other SQ function numbers.

If the SET key is pressed after registration is completed, it becomes SQFUnC display. Please set to the measurement mode by pressing the SET key.

Please do not change in the set value under the measurement because the A/D sampling rate decreases temporarily while rewriting the set value.

9-9. Function of SQ function data

Item	Function No.	Setting value	Contents
Weighing mode	SQF-01	0	Simple comparison mode
		●1	Sequential mode
		2	4 steps comparator mode 1
		3	4 steps comparator mode 2
Control mode	SQF-02	●0	Batch mode
		1	Discharge mode
		2	External input changeover
Comparison signal operation	SQF-05	0	Anytime
		1	In stable condition
		●2	Synchronizing with batch finish
		3	HOLD at synchronizing with batch finish
Near zero comparison operation	SQF-06	●0	Gross
		1	Net
		2	OFF
		3	|Gross|
		4	|Net|
Full comparative operation	SQF-07	●0	Gross
		1	Net
		2	OFF
		3	|Gross|
		4	|Net|
Batch Monitoring Timer	SQF-10	0000 ~ 9999 ●0000	Unit : 1s 0000 : Batch Monitoring Timer OFF
Start above near zero at the time of batch start	SQF-15	●0	Invalid
		1	Effective
Automatic tare at the time of batch start	SQF-16	●0	Invalid
		1	Effective
Batch start delay timer	SQF-17	0000 ~ 9999 ●0000	Unit : 1s 0000 : Batch start delay timer OFF
Automatic tare after batch start delay timer	SQF-18	●0	Invalid
		1	Effective
F-flow compare stop timer	SQF-20	0000 ~ 9999 ●0000	Unit : 0.01s 0000 : F-flow compare stop timer OFF
M-flow compare stop timer	SQF-21	0000 ~ 9999 ●0000	Unit : 0.01s 0000 : M-flow compare stop timer OFF
D-flow compare stop timer	SQF-22	0000 ~ 9999 ●0000	Unit : 0.01s 0000 : D-flow compare stop timer OFF
Flow/Discharge brand setting target	SQF-24	●0	Brand No. 0
		1	Brand No. 1
		2	Brand No. 2
		3	Brand No. 3
		4	Brand No. 4
		5	Brand No. 5
		6	Brand No. 6
		7	Brand No. 7
Automatic free fall compensation	SQF-25	●0	Invalid
		1	Effective
Width for the automatic free fall compensation	SQF-26	00000 ~ 99999 ●00000	Unit : 1D 00000 : Automatic free fall compensation OFF
Save of automatic free fall value	SQF-27	●0	Invalid
		1	Effective

●Has been set as default

Item	Function No.	Setting value	Contents
Judge condition	SQF-30	●0	Timer is up
		1	Stable and timer is up
		2	Stable or timer is up
Waiting time for judge	SQF-31	0000 ~ 9999 ●0000	Unit : 0.01s 0000 : Waiting time for judge OFF
Maximum time of compensation flow	SQF-35	000to255 ●000	Unit : 1time 000 : compensation flow OFF
Judge condition after compensation flow	SQF-36	●0	Timer is up
		1	Stable and timer is up
		2	Stable or timer is up
Compensation flow time	SQF-37	0000 ~ 9999 ●0000	Unit : 0.01s 0000 : Compensation flow OFF
Waiting time for judge after compensation flow	SQF-38	0000 ~ 9999 ●0000	Unit : 0.01s 0000 : Waiting time for judge after compensation flow OFF
Output time for the Batch finish signal	SQF-40	0000 ~ 9999 ●0000	Unit : 0.01s 0000 : Output time for the Batch finish signal OFF
Batch finish output OFF	SQF-41	●0	No condition
		1	OL or unstable
		2	Near zero
Discharge start at the time batch finish	SQF-45	●0	Invalid
		1	Effective
Discharge monitor timer	SQF-46	0000 ~ 9999 ●0000	Unit : 1s 0000 : Discharge monitor OFF
Discharge gate close delay time	SQF-47	0000 ~ 9999 ●0000	Unit : 0.01s 0000 : Discharge gate close delay time OFF
Discharge finish output time	SQF-48	0000 ~ 9999 ●0000	Unit : 0.01s 0000 : Discharge finish output OFF
Tare cancellation at the time of discharge finish	SQF-49	●0	Invalid
		1	Effective
All brand accumulation clear	SQF-98	Clear accumulation times and accumulation value for all brands	
Memory clear	SQF-99	Set the SQ function content is returned to setting default	

●Has been set as default

10. Various functions by SQ function data

10-1. Weighing mode

The measurement mode can be selected by the setting of SQ function SQF-01.

The measurement mode can be selected from the [Simple comparison mode], [Sequential mode], [4-steps comparator mode 1] or [4-steps comparator mode 2].

Default is set to [Sequential mode].

10-2. Control mode

The control mode can be selected by the setting of SQ function SQF-02.

The control mode can be selected from the [Batch mode], [Discharge mode] or [External input changeover].

When the [External control changeover] is selected, [Batch mode] is selected when the [BATCH/DISCHARGE changeover] signal of setting method of the external control input is ON, and [Discharge mode] is selected when the [BATCH/DISCHARGE changeover] signal of setting method of the external control input is OFF.

Default is set to [Batch mode]

10-3. Comparison signal operation

The operation condition of the comparison signal can be selected by SQ function SQF-05.

The operation condition of the comparison signal can be selected from [Anytime], [In stable condition], [Synchronizing with batch finish] or [HOLD at synchronizing with batch finish].

Default is set to [Synchronizing with batch finish].

10-4. Near zero (ZERO BAND) comparison operation

The operation condition of near zero signal can be selected by SQ function SQF-06.

The operation condition of near zero signals can be selected from [GROSS], [NET], [Comparison signal OFF] or [| GROSS | and | NET |].

Default is set to [GROSS].

10-5. Full comparative operation

The operation condition of [FULL] signal can be selected by SQ function SQF-07.

The operation condition of [FULL] signal can be selected from [GROSS], [NET], [Comparison signal OFF] or [| GROSS | and | NET |].

Default is set to [GROSS].

10-6. Batch Monitoring Timer

Set the timer that monitors the time from the input of Start signal to the output of Finish signal by SQ function SQF-10

When the measuring time is longer than the set value, the error is output.

The contents of error are as follows: When the [CONTROL MODE] is selecting [BATCH MODE], [SQERR 4] can be seen and the [EXTERNAL] is selected, [SQERR 5] can be seen.

Setting range: 0000-9999, Unit: 1s, 0000: OFF

Default is set to [0000]

10-7. Setting for operation at the time batch start

10-7-1. Start above near zero at the time of batch start

The operation when input batch start signal with measurement value is exceeded [ZERO BAND] is selected by SQ function SQF-15.

When the [Start above near zero at the time of batch start] is set as [Invalid], measurement value is exceeded [Near zero], batching will not be made due to the occurrence of error with the input of batch.

Default is set to [Invalid].

10-7-2. Automatic tare at the time of batch start

The operation of Automatic tare at the time of batch start is selected by SQ function SQF-16.

Default is set to [Invalid].

10-7-3. Batch start delay timer

Set the waiting time from the input of Batch start signal to the start of Batch at SQ function SQF-17

Setting range: 0000-9999, Unit: 1s, 0000: OFF

Default is set to [0000]

10-7-4. Automatic tare after batch start delay timer

The operation of Automatic tare after batch start delay timer is selected by SQ function SQF-18.

Default is set to [Invalid].

10-8. F-flow compare stop timer

Set the inhibiting time to compare the set value of F-FLOW and measured value at the time of start of Batching.

Setting range: 0000-9999, Unit: 0.01s, 0000: OFF

Default is set to [0000].

10-9. M-flow compare stop timer

Set the inhibiting time to compare the set value of M-FLOW and measured value at the time of finishing the F-FLOW.

Setting range: 0000-9999, Unit: 0.01s, 0000: OFF

Default is set to [0000].

10-10. D-flow compare stop timer

Set the inhibiting time to compare the set value of D-FLOW and measured value at the time of finishing the M-FLOW.

Setting range: 0000-9999, Unit: 0.01s, 0000: OFF

Default is set to [0000].

10-11. Flow/Discharge brand setting target

The flow/discharge brand setting target is set by SQ function SQF-24.

SQF-26: Width for the automatic free fall compensation, SQF-37: Compensation flow time, and SQF-38: Waiting time for judge after compensation flow can be set for each brand number selected as the flow/discharge brand setting target.

SQF-24: Flow/Discharge brand setting target setting is not stored in EEPROM. Returns to default when the power is turned off and back on again.

Setting range: 0 to 7

Default is set to [0].

10-12. Automatic free fall compensation

This is a function to guess the next Free Fall from a former actual Free Fall, and to set the value of the Free Fall automatically when the measurement is operated continuously.

Set data of the next Free Fall uses the moving averaged value calculated from 4 times of actual former Free Fall values.

10-12-1. Setting of automatic free fall compensation

The operation of Automatic free fall compensation is selected by SQ function SQF-25.

Default is set to [Invalid].

10-12-2. Width for the automatic free fall compensation

The width for the automatic free fall compensation is set by SQ function SQF-26.

The width for the automatic free fall compensation can be set for each brand number by setting SQF-24: Flow/Discharge brand setting target.

Setting range: 00000 to 99999, Unit: 1D, 00000: OFF

Default is set to [00000].

10-12-3. Save of automatic free fall value

The operation of save of automatic free fall value is selected by SQ function SQF-27.

When save of automatic free fall value is set as [VALID], the value compensated by automatic free fall compensation is saved setting value of free fall (SET2).

Default is set to [Invalid].

10-13. Judge condition

Judge condition at the time of finishing measuring is selected by SQ function SQF-30.

Judge condition at the time of finishing measuring is selected from [Timer is up], [Stable and timer is up] or [Stable or timer is up].

Default is set to [Timer is up].

10-14. Waiting time for judge

Set the waiting time until executing judgment after D-FLOW is finished by SQ function SQF-31

Setting range: 0000-9999, Unit: 0.01s, 0000: OFF

Default is set to [0000].

10-15. Setting for the operation of compensation flow

Set for the operation of compensation flow.

10-15-1. Maximum time of compensation flow

Set the maximum time of compensation flow by SQ function SQF-35.
Setting range: 000-255, Unit: 1time, 000:OFF
Default is set to [000].

10-15-2. Judge condition after compensation flow

Judge condition after compensation flow can be selected by SQ function SQF-36.
Judge condition after compensation flow can be selected from [Timer is up], [Stable and timer is up] or [Stable or timer is up].
Default is set to [Timer is up].

10-15-3. Compensation flow time

The compensation flow time is set by SQ function SQF-37.
The compensation flow time can be set for each brand number by setting SQF-24: Flow/Discharge brand setting target.
Setting range: 0000 to 9999, Unit: 0.01s, 0000: Compensation flow OFF
Default is set to [0000].

10-15-4. Waiting time for judge after compensation flow

The waiting time for judge after compensation flow is set by SQ function SQF-38.
The waiting time for judge after compensation flow can be set for each brand number by setting SQF-24: Flow/Discharge brand setting target.
Setting range: 0000 to 9999, Unit: 0.01s, 0000: Compensation flow OFF
Default is set to [0000].

10-16. Setting for the operation of measuring finish output

Set for the operation of measuring finish output

10-16-1. Output time for the Batch finish signal

Set the output time for the Batch finish signal by SQ function SQF-40.
Setting range: 0000-9999, Unit: 0.01s, 0000: OFF
Default is set to [0000].

10-16-2. Batch finish output OFF

The condition to make OFF the output of completion of batch can be selected by SQ function SQF-41.

The condition to make OFF the output of completion of batch can be selected from [No condition], [OL or unstable] and [Near zero].

When the [No condition] is selected, the FINISH signal will be OFF whether the set time with the [BATCH FINISH OUTPUT IN] has passed, or next start signal is inputted.

When the [OL or unstable] is selected, the FINISH signal will be OFF whether the display becomes OL or – OL, or output of Stable signal will become OFF.

When the [Near zero] is selected, the FINISH signal will be OFF at the time of Near zero signals is outputted.

Default is set to [NO CONDITION].

10-17. Setting for discharge operation after measuring finish

Set for discharge operation after measuring finish.

10-17-1. Discharge start at the time of measuring finish

Set the operation of discharge start at the time of measuring finish by SQ function SQF-45.

Default is set to [Invalid].

10-17-2. Discharge monitor timer

Set the timer that monitors the time from the Discharge start to Discharge finish by SQ function SQF-46.

Setting range: 0000-9999, Unit: 1s, 0000: OFF

Default is set to [0000].

10-17-3. Discharge gate close delay time

When measurement value fills near zero condition during discharge is executing then set the time up to gate closing by SQ function SQF-47.

Set the timer that monitors the time from the Discharge start to Discharge finish by SQ function SQF-46.

Setting range: 0000-9999, Unit: 0.01s, 0000: OFF

Default is set to [0000].

10-17-4. Discharge finish output time

Set the output time for the discharge finish signal by SQ function SQF-48.

Setting range: 0000-9999, Unit: 0.01s, 0000: OFF

Default is set to [0000].

10-17-5. Tare cancellation at the time of discharge finish

Set the operation of tare cancellation at the time of discharge finish by SQ function SQF-49.

Default is set to [Invalid].

10-18. Accumulation clear

Accumulation clear is executed by SQ function SQF-98.
Clear the accumulation times and the accumulation value.

If the F key is pressed when SQF-98 displays, ACCUCLR becomes blinking.

At this time, please press the ON/OFF key to discontinue a clear memory.
It becomes a stand-by mode, and a clear memory is not executed.

When ACCUCLR is a blinking display, the display section is turned off by pressing the F key, and it becomes SQF-99 display, the operation of memory clear is completed.

10-19. SQ function clear

SQ function clear is executed by SQ function F-99.
The setting content of the SQ function is returned to the default setting.

When the F key is pressed with SQF-99 displayed, SQF.CLR becomes a blinking display.

At this time, please press the ON/OFF key to discontinue a clear memory.
It becomes a stand-by mode, and a clear memory is not executed.

When SQF.CLR is a blinking display, the display section is turned off by pressing the F key, and it becomes SQF-01 display, the operation of memory clear is completed.

Please do not clear the SQ function under the measurement to cause an unexpected malfunction.

11. Stored place of setting data

In this unit, each data is recorded in RAM and EEPROM as follows:

The data in EEPROM can be stored almost permanent due to nonvolatile.

Moreover, RAM is backed up with the battery. (The backup time is about ten years in the room temperature.)

11-1. Data recorded in RAM

- Tare weight cancellation data
- Zero tracking data
- Zero set data
- Preset tare weight cancellation data
- Accumulated value, Accumulated count data

11-2. Data recorded in EEPROM

- Calibration data
- Function data
- C function data
- SQ function data
- Digital linearize data

11-3. Data can be changed saving location

The saving location of follow data's, is selected by C function CF-17

The saving location is selected from [RAM] or [EEPROM].

The item to which the saving location can be changed is as follows.

[RAM] is set as a default.

- Measurement comparison value 1 setting data
- Measurement comparison value 2 setting data

・ Please set the stored place to the internal RAM when the set value is continuously changed, and the rewritable time of EEPROM might exceed about one million times.

・ Please do not change in the set value under the measurement because the A/D sampling rate decreases temporarily while rewriting the set value. Please set the storing place to the internal ROM when you change the set value during the measurement.

12. Check mode

In the check mode, the following confirmations can be made.

- EzCTS mode
- External control input operation
- Output voltage of the load cell
- Analog output (Option)
- ROM version
- External control output operation
- BCD output operation (Option)
- Confirmation of options

12-1. Setting method of Check mode

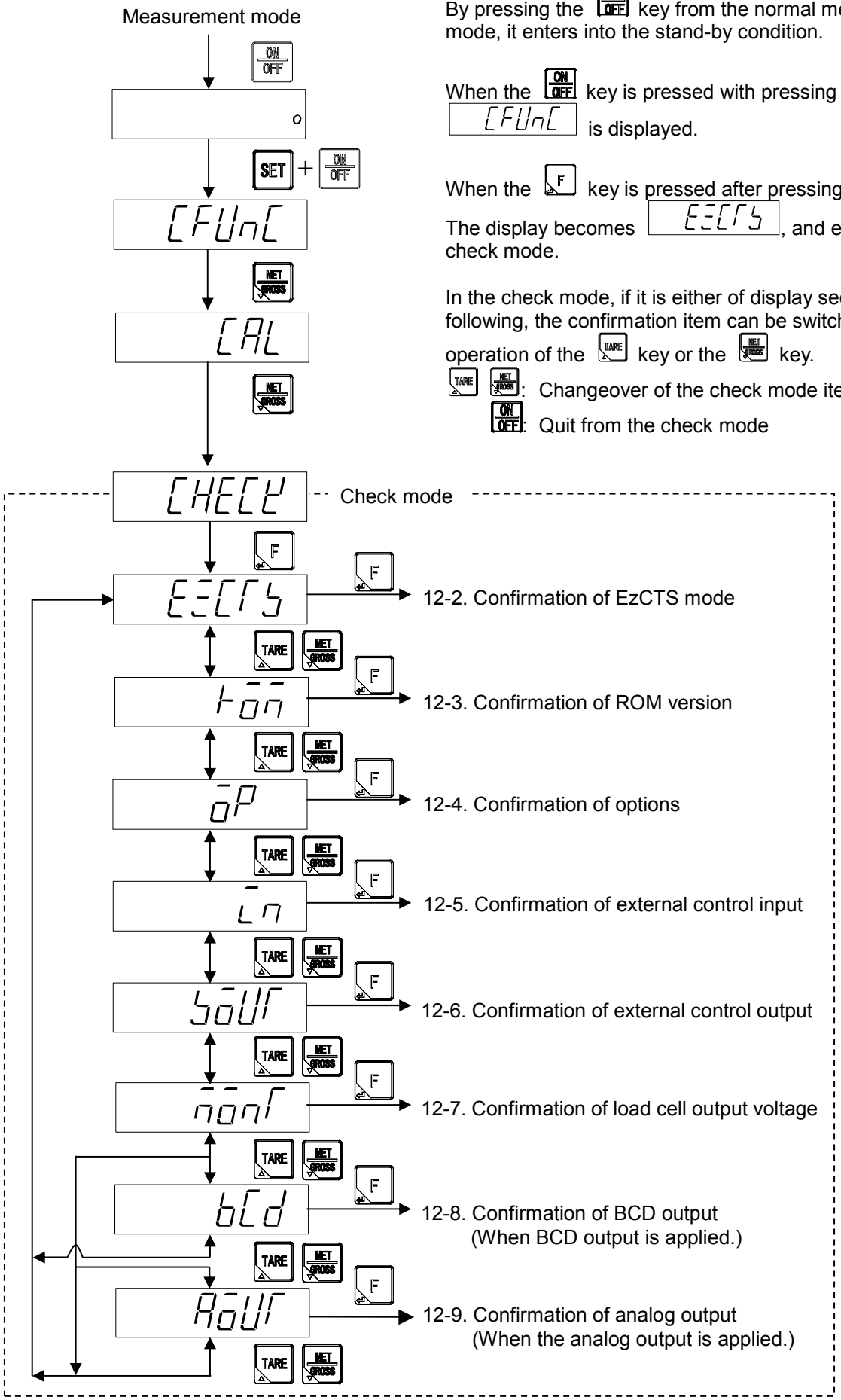

By pressing the ON OFF key from the normal measurement mode, it enters into the stand-by condition.

When the ON OFF key is pressed with pressing the SET key, CFUnC is displayed.

When the F key is pressed after pressing the NET GROSS key. The display becomes EZCTS, and enters into the check mode.

In the check mode, if it is either of display section as the following, the confirmation item can be switched by the operation of the TARE key or the NET GROSS key.

TARE NET GROSS: Changeover of the check mode item

ON OFF: Quit from the check mode

12-2. EzCTS mode

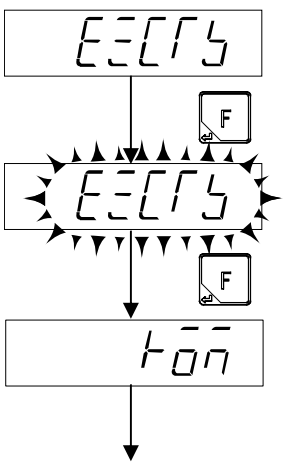

Move to the Confirmation of ROM version

When the F key is pressed from EzCTS display, EzCTS display changes into the blinking display.
And it becomes possible to use EzCTS while the display is blinking.
EzCTS in communication with the personal computer it can precede reading-out and writing the function data.

At this time, the RS-485 interface equipped as a standard becomes effective.
Process reading-out and writing the set data by PC in which the optional software of EzCTS is installed in this mode.

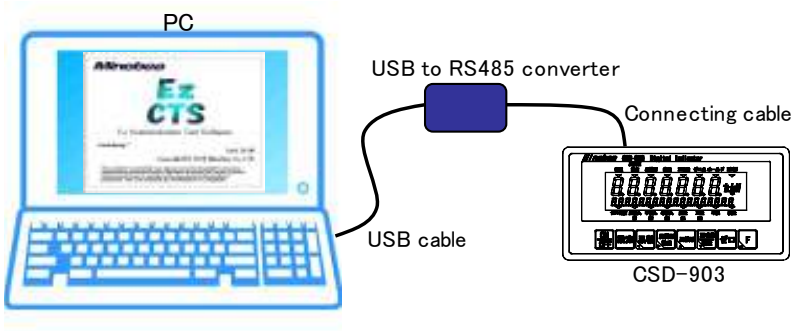

EzCTS is the application for personal computer.

It can precede reading-out and writing the function data of CSD-903 easily.

It is useful for maintenance and the backup of data.

- **In EzCTS mode, do not connect with other than EzCTS to standard RS-485 line.**
- **In EzCTS mode, the command not used by EzCTS is not returned from CSD-903.**
- **In EzCTS mode, except of EzCTS communication does not operate.**

12-3. Confirmation of ROM version

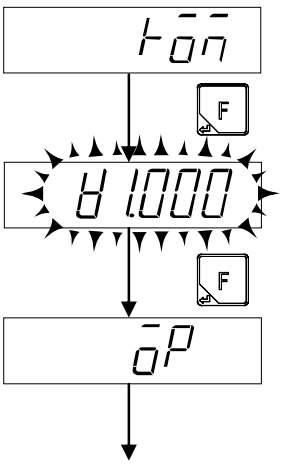

Move to the Confirmation of options

When the F key is pressed from rom display, ROM version is blinking displayed.

12-4. Confirmation of options

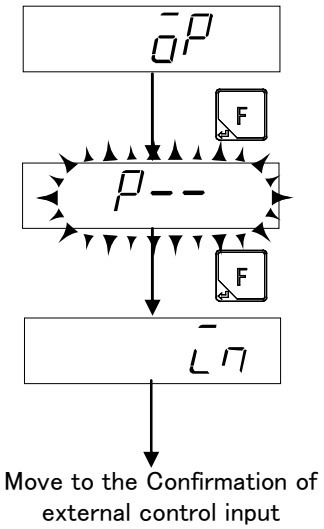

When the F key is pressed from oP display, equipped option is blinking displayed.

display	Combination of optional products
P--	Not output
P07	Current output
P25	Voltage output
P15	BCD output
P73	CC-LINK interface
P74	RS-232C interface
P76	RS-422/485 interface

12-5. Confirmation of external control input

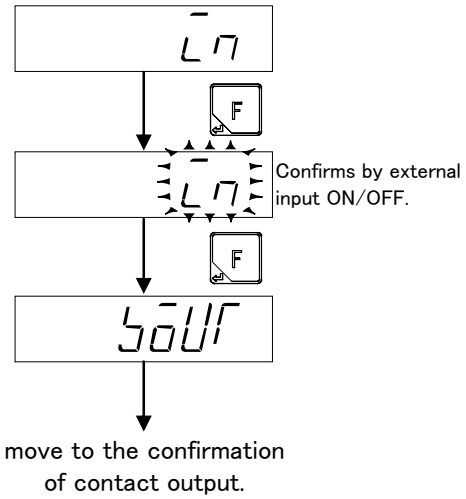

When the F key is pressed from LM display, LM display becomes blinking.

At this time, the status of ON/OFF of the external control input signal can be confirmed by the status display section.
The status display lights when each input of the external control input connector is turned on.

Pin No.	Condition
INPUT1	STABLE
INPUT2	PRESET TARE
INPUT3	TARE
INPUT4	GROSS
INPUT5	NET
INPUT6	ZERO
INPUT7	HOLD
INPUT8	ERROR
INPUT9	Z-BAND

12-6. Confirmation of external control output

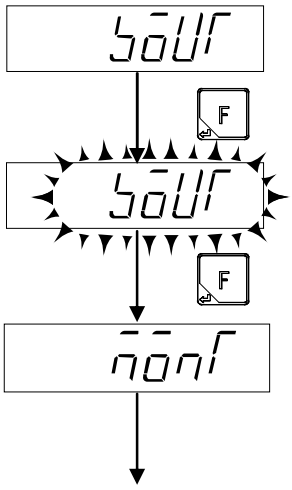

Move to the Confirmation of load cell output voltage

By pressing [F] key with [SOUT] display, OUTPUT1 of external control output is output after [SOUT] display blinks and [Stable mark] lights.

The position when the lighting [▼] mark is displayed moves when the [TARE] key and [NET/GROSS] key is operated at this moment, and the external control output that respond to the position of the mark is turned on.

[TARE] [NET/GROSS]: Changeover the each contact output

[ON/OFF]: Quit from the check mode

Condition	Pin No.
STABLE	OUTPUT1
PRESET TARE	OUTPUT2
TARE	OUTPUT3
GROSS	OUTPUT4
NET	OUTPUT5
ZERO	OUTPUT6
HOLD	OUTPUT7
ERROR	OUTPUT8
Z-BAND	OUTPUT9
F.FLOW/S1	OUTPUT10
M.FLOW/S2	OUTPUT11
D.FLOW/S3	OUTPUT12
OVER/S4	OUTPUT13

12-7. Confirmation of load cell output voltage

In the confirmation of the load cell output voltage, the weight put on a present load cell is converted into mV/V.

For example, when an uncertain load cell is used, please execute the calibration based on the load cell output value with the actual weight for the tare weight and weighing capacity.

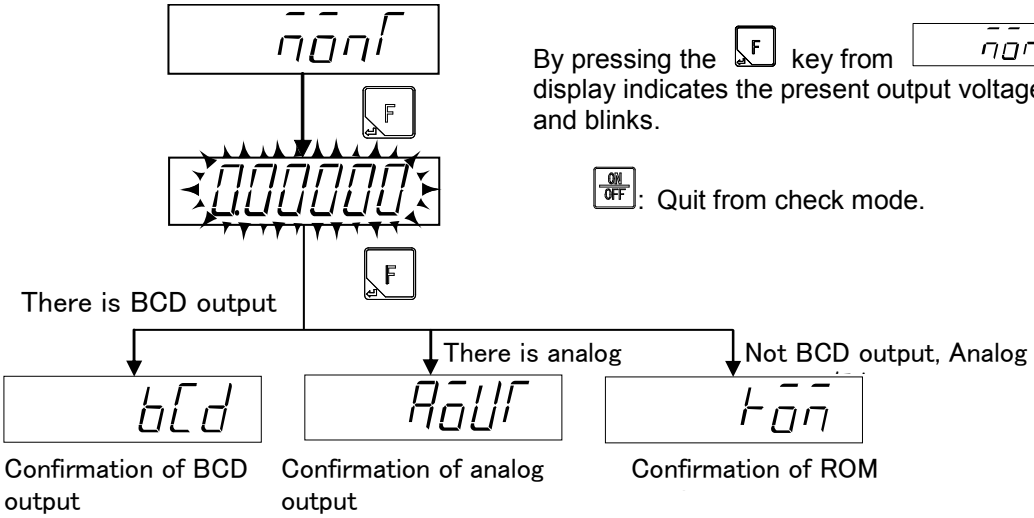

By pressing the F key from nonr display, the display indicates the present output voltage value of the load cell and blinks.

ON/OFF: Quit from check mode.

The displayed load cell output voltage value is a reference value. The display accuracy is about 0.5%.

12-8. Confirmation of BCD output (When BCD output is applied.)

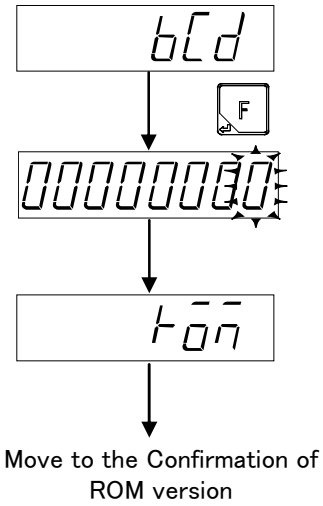

By pressing the F key from bCd display, 00000000 is displayed, and 100 digit blinks.

At this time, the same value as the display is output from the BCD output.

The BCD output changes, too, when the display is changed with a below mentioned keys.

TARE / NET/GROSS: Change the value of changed digit.

ACCUM / PRESET TARE: Select the changed digit.

ON/OFF: Finish the check mode.

When the BCD output is not installed, the BCD output is not confirmed.

12-9. Confirmation of analog output (When the analog output is applied.)

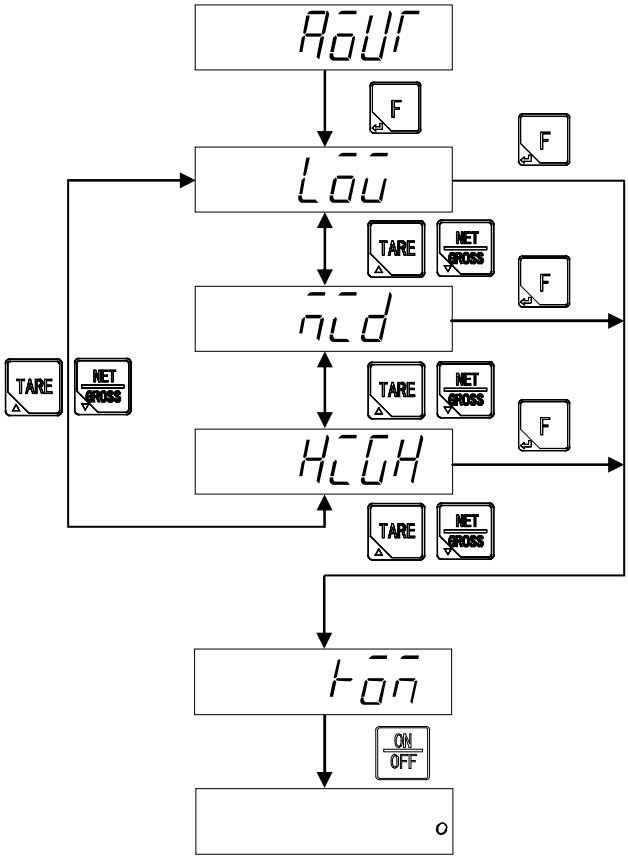

By pressing the F key from AoUT display, Lou is displayed, and the analog output of DC4 mA(DC0 V) is made. At this time, when the under mentioned key is operated, the analog output of DC 12 mA (DC5 V) is output in nLd display, and the analog output of DC DC20 mA (DC10 V) is output in HCGH display.

TARE NET GROSS: Changeover each analog output.
ON OFF: Finish the check mode.

When the analog output is not installed, the confirmation of analog output is not executed.

13. 2 wire serial interface(S-I/F)

13-1. Interface specification

Specifications	Contents
Baud rate	600 bps
Data length	8 bit
Parity bit	ODD
Stop bit	1 bit
Start bit	1 bit
Sending date	Binary code, BCD

13-2. Data format

	1	2	3	4	5	6	7	8	9	10	11	12	13	14	15	16	17	18	19	20
INTERVAL	F1	F2	F3	LEN	FUN1	FUN2	ST1	ST2	OVR	ERR	G1	G2	G3	N1	N2	N3	T1	T2	T3	BCC

(1) INTERVAL Space for 15 bit(25 ms) or more (MARK SIGNAL)
(2) F1～F3 0FFH code
(3) LEN 11H code
(4) FUN1 Printing status
(5) FUN2 00H code
(6) ST1 Condition
(7) ST2 Condition
(8) OVR 00H code
(9) ERR Condition
(10)G1～G3 GROSS data
(11)N1～N3 NET data
(12)T1～T3 TARE data
(13)BCC Block Checking Character from LEN to T3

(1) FUN1

7	6	5	4	3	2	1	0

Printing status

(2) ST1

7	6	5	4	3	2	1	0

On [1] means NET display
On [1] means GROSS display

(3) ST2

7	6	5	4	3	2	1	0

On [1] means preset tare is valid

(4) GROSS data/NET data/TARE data

G1/ N1/ T1		G2/ N2/ T2		G3/ N3 /T3	
DP	104	103	102	101	100

Load data・BCD data・TARE data

7	6	4	5

On [1] means minus
Decimal point

76	Decimal point
00	Nothing
01	10^1
10	10^2
11	10^3

- **Only during the measurement mode, the output of serial data is done.**
- **The output of the data of S-I/F stops when the maximum display is set to six digits. Set the maximum display within five digits when you use S-I/F.**
- **The output of the data of S-I/F stops when decimal point is from digits. Set the decimal point less than three digits when you use S-I/F**
- **Make connection by referring to the 2-4.**

13-3. Format data explanation

(1) Automatic print bit (FUN1: bit 0)
This bit can be used as a trigger at the instrument of serial interface receiving side.

(2) Display bit (ST1:bit 7、bit 6)
Bit 7: When the display of the instrument is gross weight, set as [1].
Bit 6: When the display of the instrument is net weight, set as [1].

13-4. Explanation of output type

(1) Stream mode
Keep outputting the data of gross weight and the net weight in constant intervals.

(2) Print signal operation
Print signal operation is selected by function F-37 and can be selected from [OFF], [Synchronizing with print signal], [Synchronizing with accumulation signal], and [Synchronizing with finish signal].

When [Synchronizing with print signal] is selected, send with [1] set to the automatic print bit on the FUN1 of output format synchronized with the F key, the external control input, or automatic printing.

When [Synchronizing with accumulation signal] is selected, send with [1] set to the automatic print bit on the FUN1 of output format when [Accumulation command] is input by the function F-50 setting, ACCUM. key, or external control input.

When [Synchronizing with finish signal] is selected, send with [1] set to the automatic print bit on the FUN1 of output format when [Forced batch finish] is input by the F key or external control input or synchronized with the batch finish signal.

Default is set to [OFF].

The automatic print bit is usually 0.

14. Standard RS-485 Communication

14-1. Specifications for standard RS-485 communication

Specification	Content
Transmission method	Half duplex
Synchro system	Start-stop synchronization
Baud rate	Select from 1 200 bps, 2 400 bps, 4 800 bps, 9 600 bps, 19 200 bps and 38 400 bps.
Data bit length	Select from 7 bit and 8 bit.
Parity bit	Select from No parity, even parity or odd parity.
Stop bit	Select from 1 bit or 2 bit.
Terminator	Select from CR+LF or CR
Transmission data	ASCII code
Length of cable	About 1 km
Address	One is selected among 0 to 31.
The number of connection	32 at maximum.

The standard RS-485 communication and Modbus communication, and optional RS-232C communication, and RS-422 communication, and RS-485 communications are not interlocked each other.

14-2. Data format

As for the data format, refer to [6-3-12. Command mode data format].

14-3. Item of standard RS-485 communication setting

14-3-1. Operation mode

The operation mode for standard RS-485 communication is selected by setting function F-47. The operation mode can be selected from [Command mode], [Stream mode], [Synchronizing with finish], [Synchronizing with accumulation signal], [Synchronizing with print signal], and [Modbus].

Default is set to [Command mode]. See "15. Modbus communication" for details of Modbus communication.

(1) Command mode

Data is sent back from CSD-903 to the host side according to the command/data sent to CSD-903 and provided by the host (personal computer or sequencer, etc.).

(2) Stream mode

When RS-485 is used, it keeps outputting the latest data of the output target selected by function F-47.

Note that the output frequency changes depending on the baud rate setting.

(3) Synchronizing with print signal

Data is output synchronized with the print signal (F key, external control input, or automatic print).

(4) Synchronizing with accumulation signal

Data is output when [Accumulation command] is input by the function F-50 setting, ACCUM. key, or external control input.

(5) Synchronizing with finish signal

Data is output when [Forced batch finish] is input by F key or external control input or synchronized with the batch finish signal.

RS-485 interface keeps outputting data at the fixed space when the stream mode is selected. Moreover, the control becomes impossible for the host.

14-3-2. Specifications of communication by RS-485

The specification of the communication by RS-485 is selected by function F-42.

Function No.	Set value	Contents
F-42	00000 ～13121	0 0 0 0 0 Data bit length: 0 : 7 bit or 1 : 8 bit Parity bit: 0 : No parity, 1 : Even parity, 2 : Odd parity Stop bit: 0 : 1 bit or 1 : 2 bit Baud rate: 0 : 1 200 bps, 1 : 2 400 bps, 2 : 4 800 bps, 3 : 9 600 bps, 4 : 19 200 bps, 5 : 38 400 bps Terminator: 0 : CR or 1 : CR＋LF

Default is set to [13020].

14-3-3. Address setting of RS-485

The address setting of RS-422/485 is set by the setting of function F-43.

Setting range: 00 ~ 31

Default is set to [00].

14-3-4. Delay time of RS-485 return data

When the transmitting terminal on the host side enters the state of low impedance after the host side transmission ends, the return data of the CSD-903 side can be delayed.

The delay time of RS-485 return data is set by the function F-45.

Setting range: 00 ~ 99, Unit: 10 ms

Default is set to [01].

14-3-5. Transmission data decimal point existence of RS-485

The transmission data decimal point existence of RS-485 is selected by function F-46.

Default is set to [No decimal point].

14-3-6. Output target at the stream mode in RS-485 interface

Output target is selected by the setting of function F-48.

Output target is selectable from [Display interlock], [Gross value], [Net value] or [Conditional load display data].

Default is set to [Display interlock].

Function F-48 becomes effective when function F-47 is set to [2].

14-4. Connecting method

14-4-1. One to one

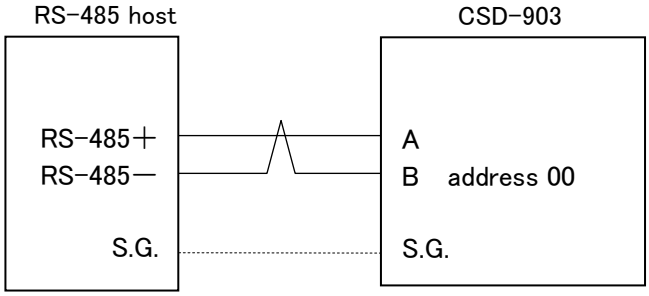

14-4-2. One to N

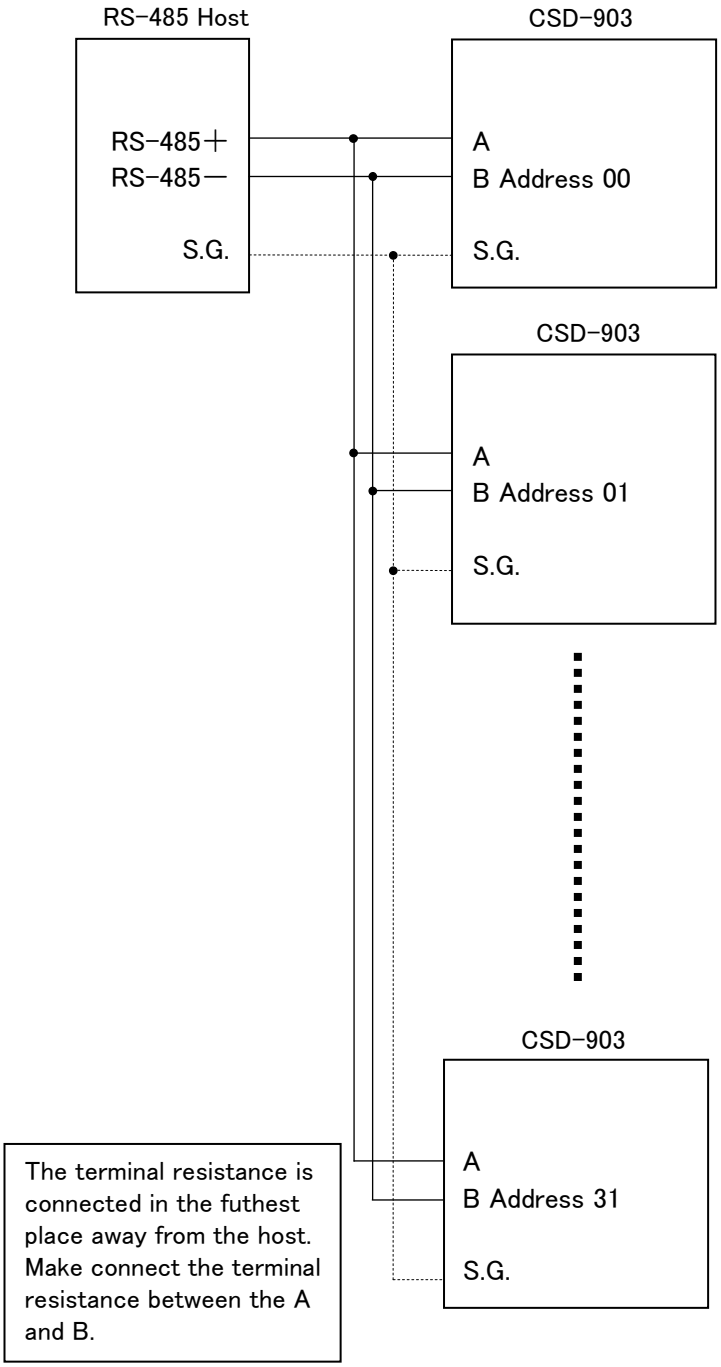

- **The S.G. terminal is connected if necessary by the state of the communication with the host side.**
- **The polarity of the signal of the host computer may have opposite case depending on the equipment.**
- **There may have no S.G. terminal in the equipment on the host side.**
- **For the connection, we recommend you to use twist pair wires.**
- **The S.G. for standard RS-485 and the common of internal circuit are connected.**

15. Modbus communication

The Modbus communication is a serial interface used for standard RS-485 communication.

The communication with the instrument supported with the Modbus communication can be done without program.

- Modbus is a registered trademark of the Modicon Inc.

The data communication with CSD-903 does not have to make the program of the communication protocol because it can be operated with the mapped memory operation in the table below.

When using the Modbus communication, set as shown in [14-3.Item of RS-485 communication setting] as below.

Standard RS-485 should be used as hardware of communication.

Moreover, as for decimal point addition, the terminator, and communication delay time, the setting will become in VALID since they have no relation with the Modbus operation.

Item	Set value
Operation mode	Modbus
Baud rate	Make selection from 1 200 bps,2 400 bps,4 800 bps, 9 600 bps, 19 200 bps and 38 400 bps.
Data bit length	8 bit
Parity bit	Selection from no parity, even parity, and odd parity
Stop bit	Select from 1 bit and 2 bit.
Address	Select one from 0 to 31. However, 0 is the broadcast address

- **The standard RS-485 interface and Modbus communication cannot be used when the optional communication either of RS-232C, RS-422, RS-485 or CC-Link is equipped with Communication and Modbus communication, and optional RS-232C communication, and RS-422 communication, and RS-485 communication, and CC-Link communications are not interlocked each other.**
- **Function F-45 shall be applied with more than the value of [01].**
- **Please set the delay time of 5 ms or more to host side.**
- **To use the brand number in Modbus communication holding register [53249], set function F-51 to [2]. To use the F-52 brand selection settings [57447 to 57448], set function F-51 to [0].**

Output coil (Bit, Reading out/Writing, Reference 0)

Address	Data name	Address	Data name
1	ZERO	13	UNUSED
2	ZERO CLEAR	14	EMERGENCY STOP
3	TARE	15	UNUSED
4	TARE CLEAR	16	FORCED BATCH FINISH
5	FLOW START	17	UNUSED
6	UNUSED	18	FORCED DISCHARGE FINISH
7	DISCHARGE START	19	ERROR RESET
8	UNUSED	20	CHANGE OF HOLD/HOLD RELEASE
9	MANUAL FREE FALL COMPENSATION	21	PRINT COMMAND
10	ACCUMULATION COMMAND	22	GROSS/NET CHANGEOVER
11	CLEAR THE LAST ACCUMULATED DATA	23	ALL BRAND ACCUMULATION CLEAR
12	UNUSED	24	UNUSED

Input status (bit reading out reference 1)

Address	Data name	Address	Data name
17	STABLE	43	DURING TARE
18	NEAR ZERO	44	PRESET TARE
19	FULL	45	CENTER OF ZERO
20	FULL FLOW/S1	46	GROSS DISPLAY
21	MEDIUM FLOW/S2	47	NET DISPLAY
22	DRIBBLE FLOW/S3	48	HOLD
23	OVER/S4	49	BRAND NO. 0 ACCUMULATION ERROR
24	OK/S0	50～304	UNUSED
25	UNDER	305	BRAND NO. 1 ACCUMULATION ERROR
26～28	UNUSED	306～560	UNUSED
29	DISCHARGE	561	BRAND NO. 2 ACCUMULATION ERROR
30	BATCH FINISH	562～816	UNUSED
31	UNUSED	817	BRAND NO. 3 ACCUMULATION ERROR
32	DISCHARGE FINISH	818～1072	UNUSED
33～35	UNUSED	1073	BRAND NO. 4 ACCUMULATION ERROR
36	DURING WEIGHING SEQUENCE	1074～1328	UNUSED
37	UNUSED	1329	BRAND NO. 5 ACCUMULATION ERROR
38	WEIGHING SEQUENCE ERROR	1330～1584	UNUSED
39	ABNORMAL WEIGHT	1585	BRAND NO. 6 ACCUMULATION ERROR
40	ZERO ERROR	1586～1840	UNUSED
41	ERROR	1841	BRAND NO. 7 ACCUMULATION ERROR
42	UNUSED		

Input registers (word reading out/writing reference 3)

Address	Data name	Address	Data name
1	DECIMAL POINT	64	STATUS ERROR CODE
2	UNIT	65～98	UNUSED
3～4	TARE WEIGHT	99	SOFTWARE VERSION
5～6	GROSS WEIGHT	100～288	UNUSED
7～8	NET WEIGHT	289	BRAND NO. 1 ACCUMULATION TIMES
9～11	UNUSED	291～294	BRAND NO. 1 ACCUMULATION VALUE (10 digits)
12	SEQUENCE ERROR NUMBER	295～544	UNUSED
13	ABNORMAL WEIGHT	545～546	BRAND NO. 2 ACCUMULATION TIMES
14	ZERO ERROR	547～550	BRAND NO. 2 ACCUMULATION VALUE (10 digits)
15	ERROR	551～800	UNUSED
16	UNUSED	801～802	BRAND NO. 3 ACCUMULATION TIMES
33～34	BRAND NO. 0 ACCUMULATION VALUE (8 digits)	803～806	BRAND NO. 3 ACCUMULATION VALUE (10 digits)
35～36	BRAND NO. 0 ACCUMULATION TIMES	807～1056	UNUSED
37～40	BRAND NO. 0 ACCUMULATION VALUE (10 digits)	1057～1058	BRAND NO. 4 ACCUMULATION TIMES
41～50	UNUSED	1059～1062	BRAND NO. 4 ACCUMULATION VALUE (10 digits)
51	STATUS	1063～1312	UNUSED
52	STATUS ERROR CODE	1313～1314	BRAND NO. 5 ACCUMULATION TIMES
53～54	TARE WEIGHT	1315～1318	BRAND NO. 5 ACCUMULATION VALUE (10 digits)
55	STATUS	1319～1568	UNUSED
56	STATUS ERROR CODE	1569～1570	BRAND NO. 6 ACCUMULATION TIMES
57～58	GROSS WEIGHT	1571～1574	BRAND NO. 6 ACCUMULATION VALUE (10 digits)
59	STATUS	1575～1824	UNUSED
60	STATUS ERROR CODE	1825～1826	BRAND NO. 7 ACCUMULATION TIMES
61～62	NET WEIGHT	1827～1830	BRAND NO. 7 ACCUMULATION VALUE (10 digits)
63	STATUS		

(1) Sequence error number

A number is written to input register address 12 when a sequence error occurs.

Number	Details	Action
1	If forcibly stopped by inputting an emergency stop during weighing	Check the cause of the emergency stop, reset the error, and restart.
3	If insufficient even after compensation flow	Alter the compensation flow time and maximum number of compensation flow times, and restart.
4	If there is a contradiction in the comparison values	Check the settings to eliminate the cause of the contradiction.
5	If the flow time exceeds the time limit	Check for flow gate blockage.
6	If the discharge time exceeds the time limit	Check for discharge gate blockage.
7	If the gross value is smaller than the final value in discharge control	Check for flow gate blockage.
8	If the net value is greater than or equal to the (final value − free fall) at the start	Remove the contents in the container.
10	If measurement begins while START is [Effective] other than for NEAR ZERO, and no container is placed on the measuring section	Check that a container is in place.

(2) Status

Status is written as the bits to input register addresses 51, 55, 59, and 63.

Bit	Details
Bit15	STABLE
Bit14	TARE WEIGHT CANCELLATION SETTING
Bit13	TARE WEIGHT CANCELLATION
Bit12	GROSS WEIGHT
Bit11	NET WEIGHT
Bit10	CENTER OF ZERO
Bit9	HOLD
Bit8	ERROR
Bit7	NEAR ZERO
Bit6	FULL FLOW/S1
Bit5	MEDIUM FLOW/S2
Bit4	DRIBBLE FLOW/S3
Bit3	OVER/S4
Bit2	OK/S0
Bit1	UNDER
Bit0	FULL

(3) Status error codes

Status error codes are written as numbers to input register addresses 52, 56, 60, and 64.

Number	Details
1	If zero setting was performed outside the valid zero setting range
2	If a number not on the list was selected for C function or function setting
4	A/D conversion error
8	If tare weight cancellation was performed outside the tare weight cancellation operation range
10	Lights when the load display exceeds [(-weighing value) - 9D], exceeds [-110% of weighing value], or exceeds [-20D]. (Depending on C function CF-03 setting)
11	Lights when the load display exceeds [(+weighing capacity) + 9D] or exceeds [+110% of weighing capacity]. (Depending on C function CF-03 setting)
12	A/D converter input minus over
13	A/D converter input plus over
20	If the load cell output and numerical input is equal to or under -2.5 mV/V and exceeds the zero adjustment range on the negative side during calibration
21	If the load cell output and numerical input is equal to or over 2.5 mV/V and exceeds the zero adjustment range on the positive side during calibration
22	If the load cell output and numerical input is under 0 mV/V and does not reach the span adjustment range during calibration
23	If the load cell output and numerical input is over 3.1 mV/V and exceeds the span adjustment range during calibration
31	EEPROM writing error

Holding registers (word reading out/writing reference number 4)

Address	Data name
1～9	UNUSED
11～12	FINAL/S1
13～14	FREE FALL/S4
15～16	PRIOR TO FIXED VALUE 1/S3
17～18	PRIOR TO FIXED VALUE 2/S2
19～20	OVER
21～22	UNDER
23～24	NEAR ZERO
25～26	FULL
27～28	PRESET TARE WIGHT
29～30	COMPENSATION FLOW TIME
31～32	WAITING TIME FOR JUDGE AFTER COMPENSATION FLOW
33～34	BRAND NO. 1 AUTOMATIC FREE FALL COMPENSATION
35～265	UNUSED
267～268	BRAND NO. 1 FINAL/S1
269～270	BRAND NO. 1 FREE FALL/S4
271～272	BRAND NO. 1 PRIOR TO FIXED VALUE 1/S3
273～274	BRAND NO. 1 PRIOR TO FIXED VALUE 2/S2
275～276	BRAND NO. 1 OVER
277～278	BRAND NO. 1 UNDER
279～280	BRAND NO. 1 NEAR ZERO
281～282	BRAND NO. 1 FULL
283～284	UNUSED
285～286	BRAND NO. 1 COMPENSATION FLOW TIME
287～288	BRAND NO. 1 WAITING TIME FOR JUDGE AFTER COMPENSATION FLOW
289～290	BRAND NO. 1 AUTOMATIC FREE FALL COMPENSATION
291～522	UNUSED
523～524	BRAND NO. 2 FINAL/S1
525～526	BRAND NO. 2 FREE FALL/S4
527～528	BRAND NO. 2 PRIOR TO FIXED VALUE 1/S3
529～530	BRAND NO. 2 PRIOR TO FIXED VALUE 2/S2
531～532	BRAND NO. 2 OVER
533～534	BRAND NO. 2 UNDER
535～536	BRAND NO. 2 NEAR ZERO
537～538	BRAND NO. 2 FULL
539～540	UNUSED
541～542	BRAND NO. 2 COMPENSATION FLOW TIME

Address	Data name
543～544	BRAND NO. 2 WAITING TIME FOR JUDGE AFTER COMPENSATION FLOW
545～546	BRAND NO. 2 AUTOMATIC FREE FALL COMPENSATION
547～778	UNUSED
779～780	BRAND NO. 3 FINAL/S1
781～782	BRAND NO. 3 FREE FALL/S4
783～784	BRAND NO. 3 PRIOR TO FIXED VALUE 1/S3
785～786	BRAND NO. 3 PRIOR TO FIXED VALUE 2/S2
787～788	BRAND NO. 3 OVER
789～790	BRAND NO. 3 UNDER
791～792	BRAND NO. 3 NEAR ZERO
793～794	BRAND NO. 3 FULL
795～796	UNUSED
797～798	BRAND NO. 3 COMPENSATION FLOW TIME
799～800	BRAND NO. 3 WAITING TIME FOR JUDGE AFTER COMPENSATION FLOW
801～802	BRAND NO. 3 AUTOMATIC FREE FALL COMPENSATION
803～1034	UNUSED
1035～1036	BRAND NO. 4 FINAL/S1
1037～1038	BRAND NO. 4 FREE FALL/S4
1039～1040	BRAND NO. 4 PRIOR TO FIXED VALUE 1/S3
1041～1042	BRAND NO. 4 PRIOR TO FIXED VALUE 2/S2
1043～1044	BRAND NO. 4 OVER
1045～1046	BRAND NO. 4 UNDER
1047～1048	BRAND NO. 4 NEAR ZERO
1049～1050	BRAND NO. 4 FULL
1051～1052	UNUSED
1053～1054	BRAND NO. 4 COMPENSATION FLOW TIME
1055～1056	BRAND NO. 4 WAITING TIME FOR JUDGE AFTER COMPENSATION FLOW
1057～1058	BRAND NO. 4 AUTOMATIC FREE FALL COMPENSATION
1059～1290	UNUSED
1291～1292	BRAND NO. 5 FINAL/S1
1293～1294	BRAND NO. 5 FREE FALL/S4
1295～1296	BRAND NO. 5 PRIOR TO FIXED VALUE 1/S3
1297～1298	BRAND NO. 5 PRIOR TO FIXED VALUE 2/S2
1299～1300	BRAND NO. 5 OVER
1301～1302	BRAND NO. 5 UNDER
1303～1304	BRAND NO. 5 NEAR ZERO
1305～1306	BRAND NO. 5 FULL
1307～1308	UNUSED
1309～1310	BRAND NO. 5 COMPENSATION FLOW TIME
1311～1312	BRAND NO. 5 WAITING TIME FOR JUDGE AFTER COMPENSATION FLOW
1313～1314	BRAND NO. 5 AUTOMATIC FREE FALL COMPENSATION
1315～1546	UNUSED
1547～1548	BRAND NO. 6 FINAL/S1
1549～1550	BRAND NO. 6 FREE FALL/S4
1551～1552	BRAND NO. 6 PRIOR TO FIXED VALUE 1/S3
1553～1554	BRAND NO. 6 PRIOR TO FIXED VALUE 2/S2
1555～1556	BRAND NO. 6 OVER
1557～1558	BRAND NO. 6 UNDER
1559～1560	BRAND NO. 6 NEAR ZERO
1561～1562	BRAND NO. 6 FULL
1563～1564	UNUSED
1565～1566	BRAND NO. 6 COMPENSATION FLOW TIME
1567～1568	BRAND NO. 6 WAITING TIME FOR JUDGE AFTER COMPENSATION FLOW
1569～1570	BRAND NO. 6 AUTOMATIC FREE FALL COMPENSATION
1571～1802	UNUSED
1803～1804	BRAND NO. 7 FINAL/S1
1805～1806	BRAND NO. 7 FREE FALL/S4
1807～1808	BRAND NO. 7 PRIOR TO FIXED VALUE 1/S3
1809～1810	BRAND NO. 7 PRIOR TO FIXED VALUE 2/S2
1811～1812	BRAND NO. 7 OVER
1813～1814	BRAND NO. 7 UNDER
1815～1816	BRAND NO. 7 NEAR ZERO
1817～1818	BRAND NO. 7 FULL
1819～1820	UNUSED
1821～1822	BRAND NO. 7 COMPENSATION FLOW TIME
1823～1824	BRAND NO. 7 WAITING TIME FOR JUDGE AFTER COMPENSATION FLOW
1825～1826	BRAND NO. 7 AUTOMATIC FREE FALL COMPENSATION

Address	Data name
1827～53248	UNUSED
53249	BRAND NUMBER
53250～56832	UNUSED
56833	OPERATION MODE
56834	UNUSED
56835～56836	SCALE INTERVAL SETTING
56837～56838	WEIGHING CAPACITY SETTING
56839～56840	WEIGHT MASS SETTING
56841～56842	REGISTER ZERO POINT LOAD CELL OUTPUT VALUE
56843～56844	REGISTER SPAN POINT LOAD CELL OUTPUT VALUE
56845	ACTUAL WEIGHT CALIBRATION STABILITY CONFIRMATION
56846	ACTUAL WEIGHT CALIBRATION REGISTER ZERO POINT
56847	ACTUAL WEIGHT CALIBRATION REGISTER SPAN POINT
56848	CALIBRATION FINISH
56849	ZERO POINT FINE ADJUSTMENT
56850	SPAN POINT FINE ADJUSTMENT
56851～56852	POINT 1 WEIGHT
56853～56854	POINT 2 WEIGHT
56855～56856	POINT 3 WEIGHT
56857～56858	FINE ADJUSTMENT MODE, LOAD DISPLAY
56859～57344	UNUSED
57345～57346	F-01 DIGITAL FILTER SETTING
57347～57348	F-02 ANALOG FILTER SETTING
57349～573450	UNUSED
57351～57352	F-04 DISPLAY TIMES
57353～57354	F-05 STABILIZING FILTER SETTING
57355～57356	F-06 STABILIZING FILTER DATA WIDTH
57357～57358	F-07 STABILIZING FILTER TIME WIDTH
57359～57360	F-08 KEY LOCK 1
57361～57362	F-09 KEY LOCK 2
57363～57364	F-10 STABILITY DETECTION DATA WIDTH
57365～57366	F-11 STABILITY DETECTION TIME WIDTH
57367～57372	UNUSED
57373～57374	F-15 OPERATING CONDITION OF PRESET TARE WEIGHT CANCELLATION
57375～57376	F-16 PRINT OPERATION
57377～57378	F-17 HOLD OPERATION
57379～57380	F-18 HOLD TARGET
57381～57382	F-19 SELECTION OF SUB DISPLAY SECTION
57383～57384	F-20 4-STEP COMPARATOR BRAND SETTING TARGET
57385～57386	F-21 4-STEP COMPARATOR OPERATION TARGET
57387～57388	F-22 4-STEP COMPARATOR OPERATION CONDITIONS
57389～57390	F-23 4-STEP COMPARATOR S0 OPERATION
57391～57392	F-24 COMPARATOR HYSTERESIS OPERATING CONDITIONS
57393～57394	F-25 COMPARATOR HYSTERESIS DATA WIDTH
57395～57396	F-26 COMPARATOR HYSTERESIS TIME WIDTH
57397～57402	UNUSED
57403～57404	F-30 BCD OUTPUT OPERATION MODE
57405～57406	F-31 BCD OUTPUT TARGET
57407～57408	F-32 BCD OUTPUT LOGIC
57409～57410	F-33 BCD PC WIDTH
57411～57412	F-34 BCD OUTPUT TIMES
57413～57416	UNUSED
57417～57418	F-37 SI/F PRINT OPERATION
57419～57422	UNUSED
57423～57424	F-40 RS232C OPERATION MODE (Reference use)
57425～57426	F-41 RS-232C/422/485 OUTPUT TARGET (Valid if F-40 = 1 to 4 for RS-232C, F-49 for RS-422/485) (Reference use)
57427～57428	F-42 RS-232C/422/485 COMMUNICATION SPECIFICATION (Reference use)
57429～57430	F-43 RS-422/485 ADDRESS SETTING (Reference use)
57431～57432	F-44 RS-422/485 CHANGEOVER (Reference use)
57433～57434	F-45 RS-485 REPLY DATA DELAY TIME (Reference use)
57435～57436	F-46 RS-232C/422/485 TRANSMISSION DATA DECIMAL (Reference use)
57437～57438	F-47 STANDARD RS-485 OPERATION (Reference use)
57439～57440	F-48 STANDARD RS-485 OUTPUT TARGET (Reference use)
57441～57442	F-49 RS-422/485 OPERATION MODE (Reference use)
57443～57444	F-50 ACCUMULATION FUNCTION OPERATING CONDITIONS
57445～57446	F-51 TARGET OF BRAND CHANGEOVER

Address	Data name
57447～57448	F-52 BRAND SELECTION SETTING
57449～57452	UNUSED
57453～57454	F-55 F KEY OPERATION SETTING
57455～57462	UNUSED
57463～57464	F-60 EXTERNAL CONTROL INPUT INPUT 1 OPERATION SETTING
57465～57466	F-61 EXTERNAL CONTROL INPUT INPUT 2 OPERATION SETTING
57467～57468	F-62 EXTERNAL CONTROL INPUT INPUT 3 OPERATION SETTING
57469～57470	F-63 EXTERNAL CONTROL INPUT INPUT 4 OPERATION SETTING
57471～57472	F-64 EXTERNAL CONTROL INPUT INPUT 5 OPERATION SETTING
57473～57474	F-65 EXTERNAL CONTROL INPUT INPUT 6 OPERATION SETTING
57475～57476	F-66 EXTERNAL CONTROL INPUT INPUT 7 OPERATION SETTING
57477～57478	F-67 EXTERNAL CONTROL INPUT INPUT 8 OPERATION SETTING
57479～57480	F-68 EXTERNAL CONTROL INPUT INPUT 9 OPERATION SETTING
57481～57482	UNUSED
57483～57484	F-70 EXTERNAL CONTROL OUTPUT OUTPUT 1 OPERATION SETTING
57485～57486	F-71 EXTERNAL CONTROL OUTPUT OUTPUT 2 OPERATION SETTING
57487～57488	F-72 EXTERNAL CONTROL OUTPUT OUTPUT 3 OPERATION SETTING
57489～57490	F-73 EXTERNAL CONTROL OUTPUT OUTPUT 4 OPERATION SETTING
57491～57492	F-74 EXTERNAL CONTROL OUTPUT OUTPUT 5 OPERATION SETTING
57493～57494	F-75 EXTERNAL CONTROL OUTPUT OUTPUT 6 OPERATION SETTING
57495～57496	F-76 EXTERNAL CONTROL OUTPUT OUTPUT 7 OPERATION SETTING
57497～57498	F-77 EXTERNAL CONTROL OUTPUT OUTPUT 8 OPERATION SETTING
57499～57500	F-78 EXTERNAL CONTROL OUTPUT OUTPUT 9 OPERATION SETTING
57501～57502	F-79 EXTERNAL CONTROL OUTPUT OUTPUT 10 OPERATION SETTING
57503～57504	F-80 EXTERNAL CONTROL OUTPUT OUTPUT 11 OPERATION SETTING
57505～57506	F-81 EXTERNAL CONTROL OUTPUT OUTPUT 12 OPERATION SETTING
57507～57508	F-82 EXTERNAL CONTROL OUTPUT OUTPUT 13 OPERATION SETTING
57509～57510	UNUSED
57511～57712	F-84 CC-LINK OCCUPIED STATIONS
57513～57514	F-85 CC-LINK STATION NUMBER SETTING
57515～57516	F-86 CC-LINK BAUD RATE SETTING
57517～57518	F-87 CC-LINK 32-BIT DATA FORMAT
57519～57522	UNUSED
57523～57524	F-90 MAINTENANCE DATE
57525～57526	F-91 MAINTENANCE NUMBER
57527～57856	UNUSED
57857～57858	CF-01 DECIMAL DISPLAY POSITION
57859～57860	CF-02 AD SAMPLING
57861～57862	CF-03 OVER DISPLAY CONDITIONS
57863～57864	UNUSED
57865～57866	CF-05 UNIT
57867～57870	UNUSED
57871～57872	CF-08 NET WEIGHT SIGN INVERSION
57873～57874	UNUSED
57875～67876	CF-10 ZERO SETTING OPERATING CONDITIONS
57877～57878	CF-11 ZERO SETTING VALIDITY RANGE
57879～57880	CF-12 ZERO TRACKING TARGET
57881～57882	CF-13 ZERO TRACKING DATA WIDTH
57883～57884	CF-14 ZERO TRACKING TIME WIDTH
57885～57886	CF-15 POWER ON ZERO OPERATION
57887～57888	C-16 TARE WEIGHT CANCELLATION OPERATING CONDITIONS
57889～57890	CF-17 DATA SAVE DESTINATION CHANGEOVER
57891～57892	CF-18 POWER ON CLEAR
57893～57894	UNUSED
57895～57896	CF-20 SETTING MODE 2, STABILITY DETECTION DURING PRESET TARE WEIGHT CANCELLATION SETTING
57897～57898	CF-21 SETTING MODE 2, SUB DISPLAY SECTION UNIT DISPLAY DURING PRESET TARE WEIGHT CANCELLATION SETTING
57899～57904	UNUSED
57905～57906	CF-25 GRAVITATIONAL ACCELERATION COMPENSATION VALUE SETTING METHOD
57907～57908	CF-26 AREA CODE OF USAGE LOCATION
57909～57910	CF-27 AREA CODE OF CALIBRATION LOCATION
57911～57912	CF-28 GRAVITATIONAL ACCELERATION VALUE SETTING FOR USAGE LOCATION
57913～57914	CF-29 GRAVITATIONAL ACCELERATION VALUE SETTING FOR CALIBRATION LOCATION
57915～57934	UNUSED
57935～57936	CF-40 RANGE CHANGEOVER OPERATION
57937～57398	CF-41 SECOND RANGE SCALE INTERVAL SETTING
57939～57940	CF-42 SECOND RANGE BOUNDARY SETTING

Address	Data name
57941～57492	CF-43 THIRD RANGE SCALE INTERVAL SETTING
57943～57944	CF-44 THIRD RANGE BOUNDARY SETTING
57945～57992	UNUSED
57995～57996	CF-70 ANALOG OUTPUT TARGET
57997～57998	CF-71 DISPLAY VALUE FOR ANALOG OUTPUT OF 4 mA DC (0 V DC)
57999～58000	CF-72 DISPLAY VALUE FOR ANALOG OUTPUT OF 20 mA DC (10 V DC)
58001～58034	UNUSED
58035～58036	CF-90 CALIBRATION DATA SCALE INTERVAL (Reference use)
58037～58038	CF-91 CALIBRATION DATA WEIGHING CAPACITY (Reference use)
58039～58040	CF-92 CALIBRATION DATA WEIGHT (Reference use)
58041～58042	CF-93 CALIBRATION ZERO mV/V VALUE (Reference use)
58043～58044	CF-94 CALIBRATION SPAN mV/V VALUE (Reference use)
58045～58048	UNUSED
58049～58050	CF-97 STABILITY DETECTION TIME WIDTH DURING CALIBRATION
58051～58368	UNUSED
58369～58370	SQF-01 MEASUREMENT MODE
58371～58372	SQF-02 CONTROL MODE
58373～58376	UNUSED
58377～58378	SQF-05 COMPARISON SIGNAL OPERATION
58379～58380	SQF-06 NEAR ZERO COMPARISON OPERATION
58381～58382	SQF-07 FULL COMPARISON OPERATION
58383～58386	UNUSED
58387～58388	SQF-10 MEASUREMENT TIME MONITORING TIMER
58389～58396	UNUSED
58397～58398	SQF-15 EFFECTIVE OVER NEAR ZERO AT FLOW START
58399～58400	SQF-16 AUTOMATIC TARE AT FLOW START
58401～58402	SQF-17 WAITING TIME FOR FLOW START
58403～58404	SQF-18 AUTOMATIC TARE AFTER WAITING FLOW START
58405～58406	UNUSED
58407～58408	SQF-20 FULL FLOW COMPARISON PROHIBITED TIME
58409～58410	SQF-21 MEDIUM FLOW COMPARISON PROHIBITED TIME
58411～58412	SQF-22 DRIBBLE FLOW COMPARISON PROHIBITED TIME
58413～58414	UNUSED
58415～58416	SQF-24 FLOW/DISCHARGE BRAND SETTING TARGET
58417～58418	SQF-25 AUTOMATIC FREE FALL COMPENSATION OPERATION
58419～58420	SQF-26 AUTOMATIC FREE FALL COMPENSATION VALIDITY WIDTH
58421～58422	SQF-27 AUTOMATIC FREE FALL SAVE
58423～58426	UNUSED
58427～58428	SQF-23 JUDGE CONDITION
58429～58430	SQF-31 WAITING TIME FOR JUDGE
58431～58436	UNUSED
58437～58438	SQF-35 MAXIMUM NUMBER OF COMPENSATION FLOW TIMES
58439～58440	SQF-36 JUDGE CONDITION AFTER COMPENSATION FLOW
58441～58442	SQF-37 COMPENSATION FLOW TIME
58443～58444	SQF-38 WAITING TIME FOR JUDGE AFTER COMPENSATION FLOW
58445～58446	UNUSED
58447～58448	SQF-40 BATCH FINISH OUTPUT TIME
58449～58450	SQF-41 BATCH FINISH OUTPUT OFF CONDITION
58451～58456	UNUSED
58457～58458	SQF-45 DISCHARGE START ON BATCH FINISH
58459～58460	SQF-46 DISCHARGE TIME MONITORING TIMER
58461～58462	SQF-47 WAITING TIME FOR DISCHARGE GATE CLOSE
58463～58464	SQF-48 DISCHARGE FINISH OUTPUT TIME
58465～58466	SQF-49 TARE CLEAR ON DISCHARGE FINISH

15-1. Calibration by transmission through Modbus interface

Please proceed the setting according to the following flow chart in this calibration.

15-1-1. Calibration mode

Each item of the flow chart corresponds to each procedure of [4-3. Calibration procedure details]. Please refer to [4-3. Calibration procedure details] for the details.

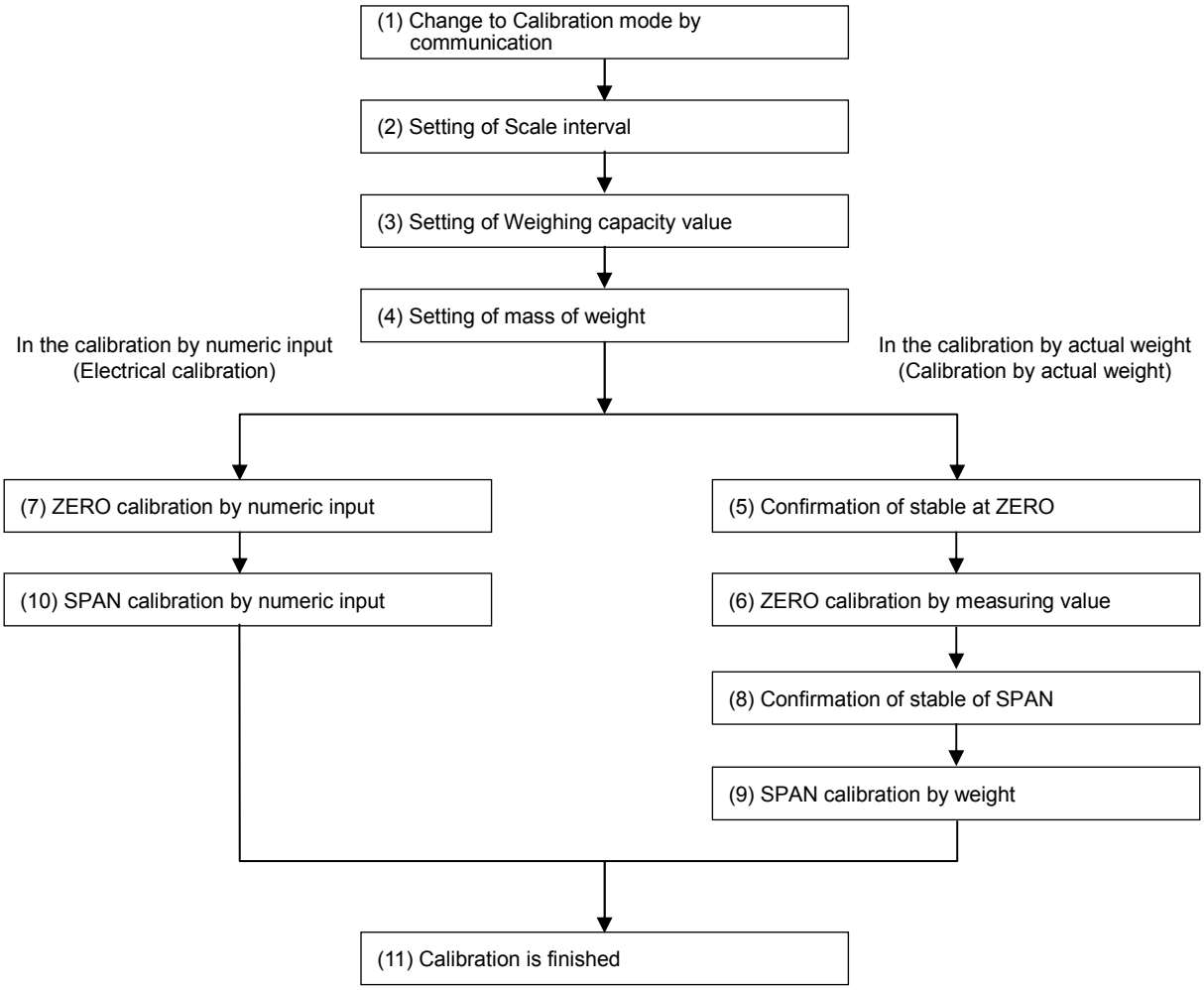

- **While executing the calibration by transmission, -rS- (–RS–) is displayed.**
- **When the calibration is compulsorily finished, all the data returns to the condition before the calibration without executing the registration.**
- **Please register the data for the calibration with the weight after confirming the stable condition without fail.**

(1) Change to calibration mode by communication
Shift to the calibration mode by writing [9] at the holding register address 56833.

(2) Setting of scale interval
The scale interval is written in holding register address 56835 to 56836.
Scale interval : Selectable from 1, 2, 5, 10, 20 and 50.

Error outside the setting range
When the data outside the setting range is written, the following code is set.

Condition	Error code	Contents
illegal data	0x03	When the data outside the setting range is written

(3) Set of weighing capacity
The weighing capacity is written in holding register address 56837 to 56838.
Setting range : 1 to 99999

Error outside the setting range
When the data outside the setting range is written, the following code is set.

Condition	Error code	Contents
illegal data	0x03	When the data outside the setting range is written

(4) Set of mass of weight
Mass of weight is written in holding register address 56839 to 56840.
Setting range : 1 to 99999
However, the data is below the weighing capacity.

Error outside the setting range
When the data outside the setting range is written, the following code is set.

Condition	Error code	Contents
illegal data	0x03	When the data outside the setting range is written

(5) Confirm the stability of zero (Actual weight)
Stable/Unstable is read out from holding register address 56845.
0 : Unstable 1 : Stable

(6) Calibration at zero by measurement value

The load cell output value is registered in holding register address 56846 as the zero point.

[1] is written in holding register address 56846.

[1] is automatically rewritten as [0] after writing is normally completed.

Setting range : 1

TE-L error

[20] (TE-L) is written in input register address 52 when the read load cell output value is less than -2.5 mV/V which exceeds the range of zero adjustment on a minus side.

Condition	Error code	Contents
TE-L	0x03	(Zero point) < (-2.5 mV/V)

TE-H error

[21] (TE-H) is written in input register address 52 when the read load cell output value is more than 2.5 mV/V which exceeds the range of zero adjustment on a plus side.

Condition	Error code	Contents
TE-H	0x03	(2.5 mV/V) < (Zero point)

Error outside the setting range

When the data outside the setting range is written, the following code is set.

Condition	Error code	Contents
illegal data	0x03	When data outside [1] is written.

(7) Zero calibration by numeric input

Zero is registered by setting the amount of unit mV/V in holding register address 56841 to 56842.

Setting range : -250000 to 250000 (-2.5 mV/V ~ 2.5 mV/V).

TE-L error

[20] (TE-L) is written in input register address 52 when the read load cell output value is less than -2.5 mV/V which exceeds the range of zero adjustment on a minus side.

Condition	Error code	Contents
TE-L	—	Zero point mV/V value < -250000

TE-H error

[21] (TE-H) is written in input register address 52 when the read load cell output value is more than 2.5 mV/V which exceeds the range of zero adjustment on a plus side.

Condition	Error code	Contents
TE-H	—	250000 < Zero point mV/V value

Error outside the setting range

When the data outside the setting range is written, the following code is set.

Condition	Error code	Contents
illegal data	0x03	When the value outside -250000 to 250000 is written.

(8) Confirm the stability of span (Actual weight)
Stable/Unstable is read out from holding register address 56845.
0 : Unstable 1 : Stable

(9) Calibration at span by measurement value
The load cell output value is registered in holding register address 56847 as the span point.
[1] is written in holding register address 56847.
[1] is automatically rewritten as [0] after writing is normally completed.
Setting range : 1

SP-L error
[22] (SP-L) is written in input register address 52 when the read out load cell output value is 0 mV/V or less which is not reached to the range of span adjustment on a minus side.

Condition	Error code	Contents
SP-L	—	(Span point) - (Zero point) ≦ (0.0 mV/V)

SP-H error
[23] (SP-H) is written in input register address 52 when the read load cell output value is more than 3.1 mV/V which exceeds the range of span adjustment on a plus side.

Condition	Error code	Contents
SP-H	—	(3.1 mV/V) < (Span point) - (Zero point) (3.1 mV/V) < (Span point)

Error outside the setting range
When the data outside the setting range is written, the following code is set.

Condition	Error code	Contents
illegal data	0x03	When data outside [1] is written.

(10) Span calibration by numeric input
Span is registered by setting the amount of unit mV/V in holding register address 56843 to 56844.
Setting range : 1 to 310000 (0.0001 m V/V ~ 3.1 m V/V)

SP-L error
[22] (SP-L) is written in input register address 52 when the input load cell output value is 0 mV/V or less which is not reached to the range of span adjustment on a minus side.

Condition	Error code	Contents
SP-L	—	(Span point) - (Zero point) ≦ (0.0 mV/V)

SP-H error
[23] (SP-H) is written in input register address 52 when the read load cell output value is more than 3.1 mV/V which exceeds the range of span adjustment on a plus side.

Condition	Error code	Contents
SP-H	—	(3.1 mV/V) < (Span point) - (Zero point) (3.1 mV/V) < (Span point)

Error outside the setting range
When the data outside the setting range is written, the following code is set.

Condition	Error code	Contents
illegal data	0x03	When data outside [1 to 310000] is written.

(11) Finish calibration

The calibration data such as zero point and the span point that is registered temporary are stored in holding register address 56848 and returned to the measurement mode.

[1] is written in holding register address 56848.

[1] is automatically rewritten as [0] after writing is normally completed.

Error outside the setting range

When the data outside the setting range is written, the following code is set.

Condition	Error code	Contents
illegal data	0x03	When data outside [1] is written.

(12) Calibration forced finish.

When [0] is written in holding register address 56833 during the calibration procedure, the calibration is discontinued without storing the calibration data that is registered temporary, and you can return to the measurement mode.

15-1-2. Fine adjustment mode for Zero and Span

Each item of the flow chart corresponds to each procedure of [4-4. Details of procedure for fine adjustment of Zero point and Span point].

Please refer [4-4. Details of procedure for fi ne adjustment of Zero point and Span point] for the details.

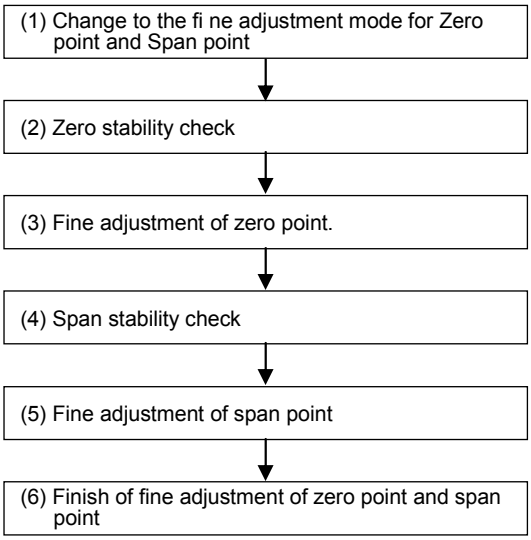

- **While executing the calibration by transmission, -rS- (–RS–) is displayed.**
- **When the calibration is compulsorily finished, all the data returns to the condition before the calibration without executing the registration.**
- **Please register the data for the calibration with the weight after confirming the stable condition without fail.**

(1) Change to the fine adjustment mode for Zero point and Span point

Shift to fine adjustment mode of zero point and span point by writing [10] in holding register address 56833.

(2) Zero stability check

The weighing values are read out from holding register addresses 56857 to 56858.

Stable/Unstable is read out from holding register address 56845 with no load on the measuring section.

0 : Unstable 1 : Stable

(3) Fine adjustment of zero point

Zero the load values from holding register addresses 56857 to 56858.

Execute the fine adjustment after writing the data showing in below table in holding register address 56849.

	Writing holding register address 56849
Fine adjustment at plus side	1
Corse adjustment at plus side	10
Fine adjustment at minus side	-1
Corse adjustment at minus side	-10

TE-L error

[20] (TE-L) is written in input register address 52 when the read load cell output value is less than -2.5 mV/V which exceeds the range of zero adjustment on a minus side.

Condition	Error code	Contents
TE-L	0x03	(Zero point) < (-2.5 mV/V)

TE-H error

[21] (TE-H) is written in input register address 52 when the read load cell output value is more than 2.5 mV/V which exceeds the range of zero adjustment on a plus side.

Condition	Error code	Contents
TE-H	0x03	(2.5 mV/V) < (Zero point) (3.1 mV/V) < (Span point)

Error outside the setting range

When the data outside the setting range is written, the following code is set.

Condition	Error code	Contents
illegal data	0x03	When data outside [1], [10], [-1] or [-10] is written.

(4) Span stability check

The load values are read out from holding register addresses 56857 to 56858.

Weights that can be loaded on the weighing section, not exceeding the weighing capacity, are placed and Stable/Unstable is read out from holding register address 56845.

0 : Unstable 1 : Stable

(5) Fine adjustment for Span

Adjust the display to match the weights loaded on the weighing section.

Execute the fine adjustment after writing the data showing in below table in holding register address 56850.

	Writing holding register address 56850
Fine adjustment at plus side	1
Corse adjustment at plus side	10
Fine adjustment at minus side	-1
Corse adjustment at minus side	-10

SP-L error

[22] (SP-L) is written in input register address 52 when the input load cell output value is 0 mV/V or less which is not reached to the range of span adjustment on a minus side.

Condition	Error code	Contents
SP-L	0x03	(Span point) - (Zero point) ≦ (0.0 mV/V)

SP-H error

[23] (SP-H) is written in input register address 52 when the read load cell output value is more than 3.1 mV/V which exceeds the range of span adjustment on a plus side.

Condition	Error code	Contents
SP-H	0x03	(3.1 mV/V) < (Span point) - (Zero point) (3.1 mV/V) < (Span point)

Error outside the setting range

When the data outside the setting range is written, the following code is set.

Condition	Error code	Contents
illegal data	0x03	When data outside [1], [10], [-1] or [-10] is written.

(6) Finish of fi ne adjustment for Zero point and Span point

The adjusted data for zero point and the span point that is registered temporary are stored in holding register address 56848 and returned to the measurement mode.

[1] is written in holding register address 56848.

[1] is automatically rewritten as [0] after writing is normally completed.

Error outside the setting range

When the data outside the setting range is written, the following code is set.

Condition	Error code	Contents
illegal data	0x03	When data outside [1] is written.

(7) Calibration forced finish.

When [0] is written in holding register address 56833 during the calibration procedure, the calibration is discontinued without storing the calibration data that is registered temporary, and you can return to the measurement mode.

15-1-3. Calibration mode of digital linearization

Each item of the flow chart corresponds to each procedure of [4-5. Details of procedure for fine adjustment of Zero point and Span point].

Please refer [4-5. Details of procedure for fi ne adjustment of Zero point and Span point] for the details.

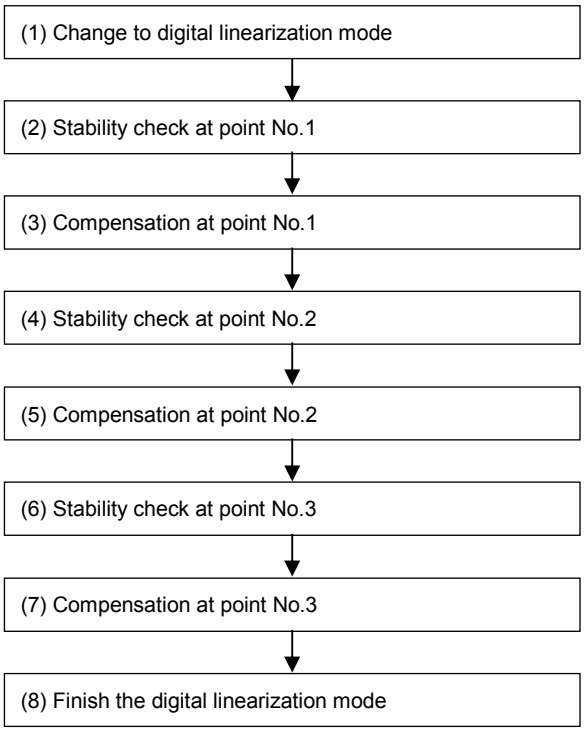

- **While executing the calibration by transmission, -rS- (–RS–) is displayed.**
- **When the calibration is compulsorily finished, all the data returns to the condition before the calibration without executing the registration.**
- **Please register the data for the calibration with the weight after confirming the stable condition without fail.**

(1) Change to digital linearization mode
Shift to digital linearization mode by writing [11] in holding register address 56833.

(2) Stability check at point No. 1
Weights are placed for the point to be calibrated on the weighing section and Stable/Unstable is read out from holding register address 56845.
0 : Unstable 1 : Stable

(3) Compensation by 1 point

The weight amount at point No.1 is set and registered in holding register address 56851 to 56852.

Setting range : 1 to Maximum display value

LN-L error

[24] (LN-L) is written in input register address 52 when input load value is lower than zero point.

Condition	Error code	Contents
LN-L	—	(Value at Point No.1) < (Zero point)

LN-H error

[25] (LN-H) is written in input register address 52 when input load value is higher than weighing capacity.

Condition	Error code	Contents
LN-H	—	(Span point) < (Value at Point No.1)

Error outside the setting range

When the data outside the setting range is written, the following code is set.

Condition	Error code	Contents
illegal data	0x03	When data outside [1] to [Maximum display value] is written.

(4) Stability check at point No. 2

Weights are placed for the point to be calibrated on the weighing section and Stable/Unstable is read out from holding register address 56845.

0 : Unstable 1 : Stable

(5) Compensation by 2 points

After putting the weight of the point which should be compensated on the measuring part, the weight amount at point No.2 is set and registered in holding register address 56853 to 56854.

Setting range : 1 to Maximum display value

LN-L error

[24] (LN-L) is written in input register address 52 when input load value is lower than zero point.

Condition	Error code	Contents
LN-L	—	(Value at Point No.2) < (Value at Point No.1)

LN-H error

[25] (LN-H) is written in input register address 52 when input load value is higher than weighing capacity.

Condition	Error code	Contents
LN-H	—	(Span point) < (Value at Point No.2)

Error outside the setting range

When the data outside the setting range is written, the following code is set.

Condition	Error code	Contents
illegal data	0x03	When data outside [1] to [Maximum display value] is written.

(6) Stability check at point No. 3

Weights are placed for the point to be calibrated on the weighing section and Stable/Unstable is read out from holding register address 56845.

0 : Unstable 1 : Stable

(7) Compensation by 3 points

After putting the weight of the point which should be compensated on the measuring part, the weight amount at point No.3 is set and registered in holding register address 56855 to 56856.

Setting range : 1 to Maximum display value

LN-L error

[24] (LN-L) is written in input register address 52 when input load value is lower than zero point.

Condition	Error code	Contents
LN-L	—	(Value at Point No.3) < (Value at Point No.2)

LN-H error

[25] (LN-H) is written in input register address 52 when input load value is higher than weighing capacity.

Condition	Error code	Contents
LN-H	—	(Span point) < (Value at Point No.3)

Error outside the setting range

When the data outside the setting range is written, the following code is set.

Condition	Error code	Contents
illegal data	0x03	When data outside [1] to [Maximum display value] is written.

(8) Finish the digital linearization mode

The adjusted data for compensation value of digital linearization that is registered temporary are stored in holding register address 56848 and returned to the measurement mode.

[1] is written in holding register address 56848.

[1] is automatically rewritten as [0] after writing is normally completed.

Error outside the setting range

When the data outside the setting range is written, the following code is set.

Condition	Error code	Contents
illegal data	0x03	When data outside [1] is written.

(9) Calibration forced finish.

When [0] is written in holding register address 56833 during the calibration procedure, the calibration is discontinued without storing the calibration data that is registered temporary, and you can return to the measurement mode.

15-1-4. Calibration mode of zero point only

The items in the flowchart correspond to the steps in [4-6 Calibration only of zero point].
For details, refer to [4-6 Calibration only of zero point].

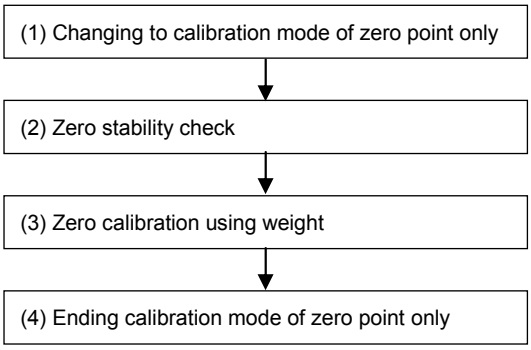

- **While executing the calibration by transmission, -rS- (–RS–) is displayed.**
- **When the calibration is compulsorily finished, all the data returns to the condition before the calibration without executing the registration.**
- **Please register the data for the calibration with the weight after confirming the stable condition without fail.**

(1) Changing to calibration mode of zero point only
Write 12 to maintenance address 56853, and proceed to calibration mode of zero point only.

(2) Zero stability check
Stable/Unstable is read out from holding register address 56845 with no load on the measuring section.
0 : Unstable 1 : Stable

(3) Calibration at zero by measurement value
The load cell output value is registered in holding register address 72 as the zero point.
[1] is written in holding register address 72.
[1] is automatically rewritten as [0] after writing is normally completed.
Setting range : 1

TE-L error
[20] (TE-L) is written in input register address 52 when the read load cell output value is less than -2.5 mV/V which exceeds the range of zero adjustment on a minus side.

Condition	Error code	Contents
TE-L	—	(Zero point) < (-2.5 mV/V)

TE-H error
[21] (TE-H) is written in input register address 52 when the read load cell output value is more than 2.5 mV/V which exceeds the range of zero adjustment on a plus side.

Condition	Error code	Contents
TE-H	—	(2.5 mV/V) < (Zero point)

Error outside the setting range

When the data outside the setting range is written, the following code is set.

Condition	Error code	Contents
illegal data	0x03	When data outside [1] is written.

(4) Changing to calibration mode at zero point only

The calibration data such as zero point and the span point that is registered temporary are stored in holding register address 56848 and returned to the measurement mode.

[1] is written in holding register address 56848.

[1] is automatically rewritten as [0] after writing is normally completed.

Error outside the setting range

When the data outside the setting range is written, the following code is set.

Condition	Error code	Contents
illegal data	0x03	When data outside [1] is written.

(5) Calibration forced finish.

When [0] is written in holding register address 51 during the calibration procedure, the calibration is discontinued without storing the calibration data that is registered temporary, and you can return to the measurement mode.

16. Options

16-1. Analog output

16-1-1. Current output specifications (model: CSD903-P07)

Specifications	Content
Output	DC4 mA ~ 20 mA
Load characteristic	510 ohm or less
Non linearity	0.02 %F.S.
Resolution	Approx. 1/12000 or more
Over range	Approx. DC2.4 mA, [-OL] displayed. Approx. DC21.6 mA, [OL] displayed.
Output rate	4 times/s, 20 times/s

16-1-2. Voltage output specifications (model: CSD903-P25)

Specifications	Content
Output	DC0 V ~ 10 V
Load characteristic	5 k-ohm or more
Non linearity	0.02 %F.S.
Resolution	Approx. 1/12000 or more
Over range	Approx. DC-1 V, [-OL] displayed. Approx. DC11, [OL] displayed.
Output rate	4 times/s, 20 times/s

- **The analog output of this unit executes rewriting the output synchronizing with the display.**
- **The internal circuit and photo-coupler is insulated.**
- **After turning on the power supply, the analog output has the output change element.**
  Please turn on the power supply for about one hour before to use it in stable condition.

16-1-3. Connection of analog output

(1) Current output

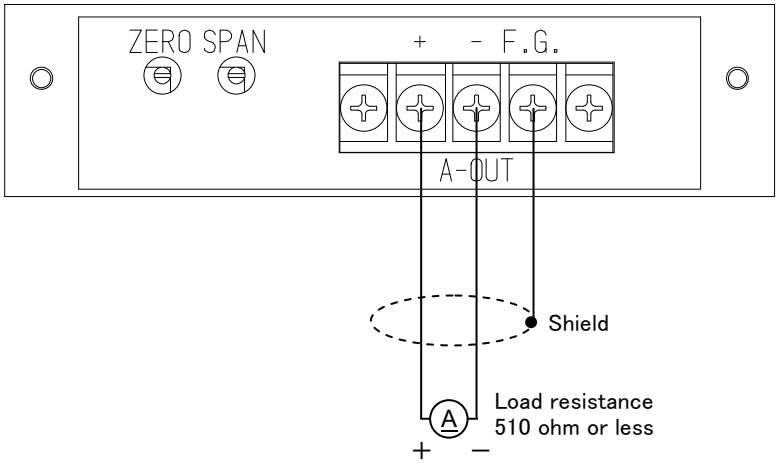

(2) Voltage output

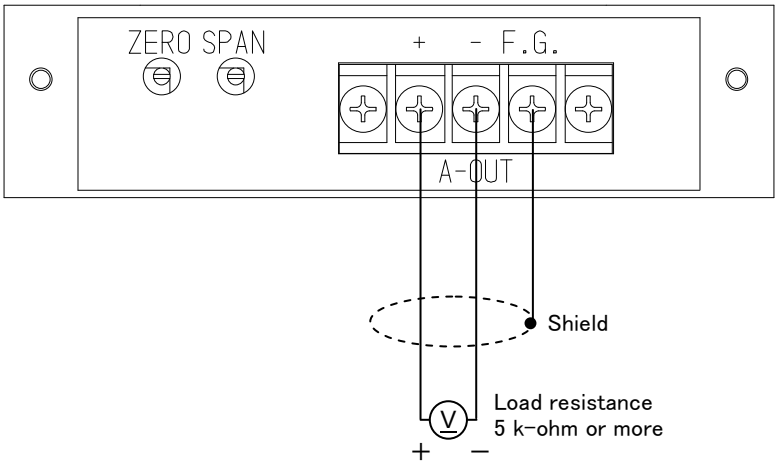

- **For the connection with the analog output, be sure to apply the shielded cable and shield should be connected with F.G terminal.**
- **To comply the instrument with the CE conformity or applied JIS standard, please use shielded cable and connect the shield with the F.G. terminal.**

16-1-4. Analog output target

The analog output target is selected by C function CF-70.
The analog output target can be selected from [Display interlock], [Gross value] and [Net value].
Default is set to [Display interlock].

16-1-5. Scaling of analog output

The analog output is set as the minimum value ~ the maximum value by 0 to 10 000.
This can be made any value by changing CF-71 and CF-72.

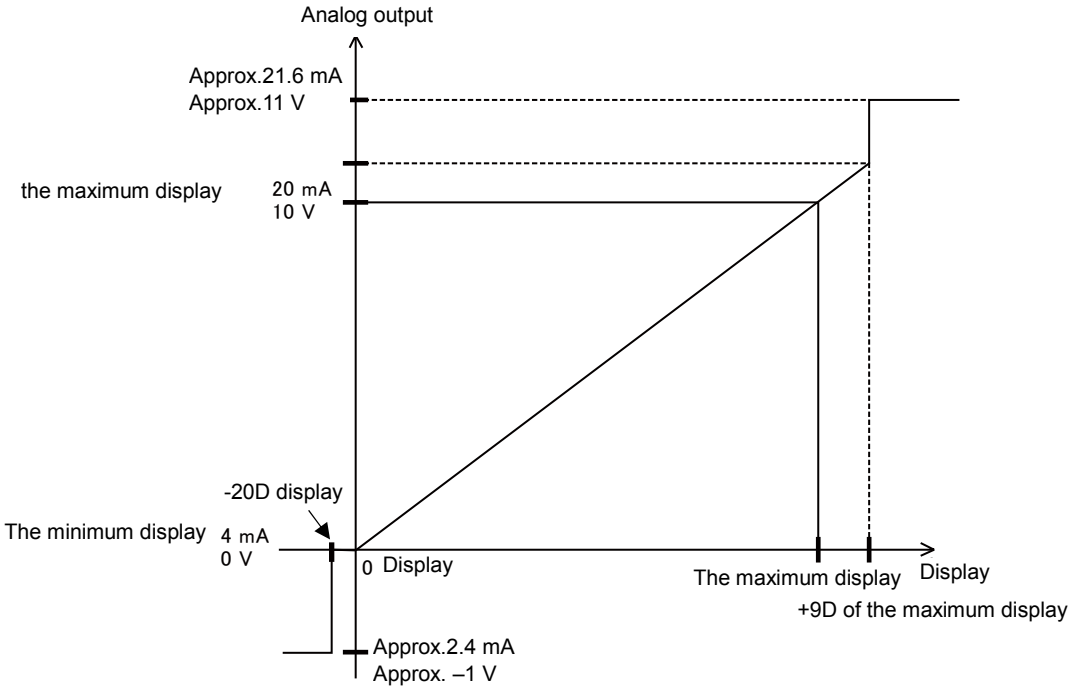

CF-71 set the display when the minimum value is output.
CF-72 set the display when the maximum value is output.

- **The setting of CF-72 must not exceed the weighing capacity set in clause 4.**
- **Please set the smaller value in CF-71 than the value set in CF-72.**

Scaling of analog output when set value of CF-03 is set to 0 or 1.

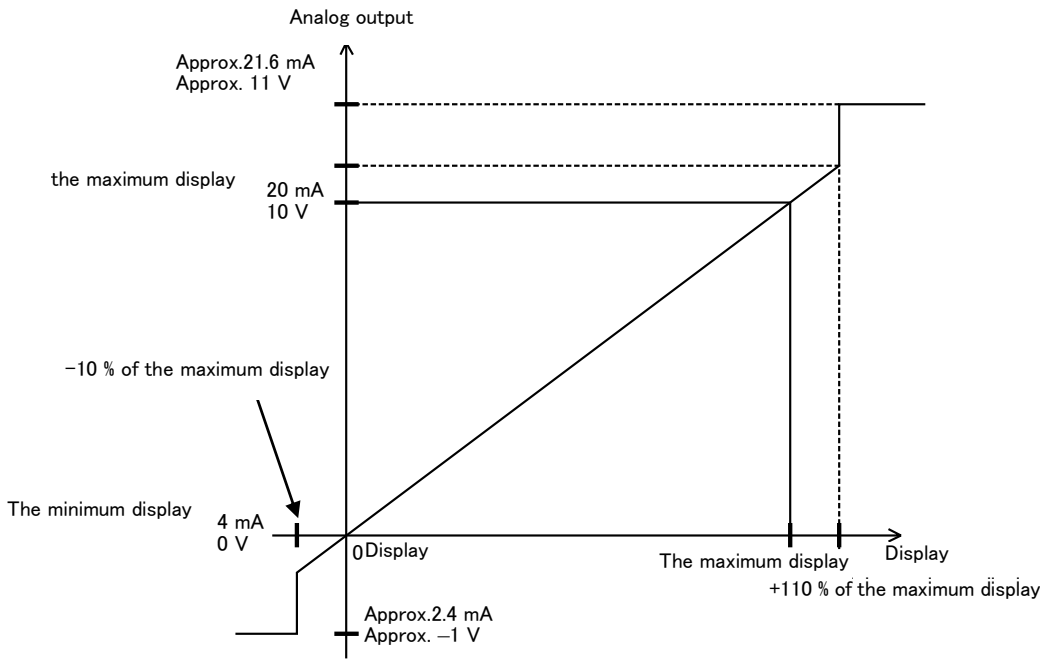

CF-71 set the display when the minimum value is output.
CF-72 set the display when the maximum value is output.

Ex) CF-71: set as 1 000
CF-72: set as 5 000
When the display is 5 000, the maximum value is output.
When the display is 1 000, the minimum value is output.

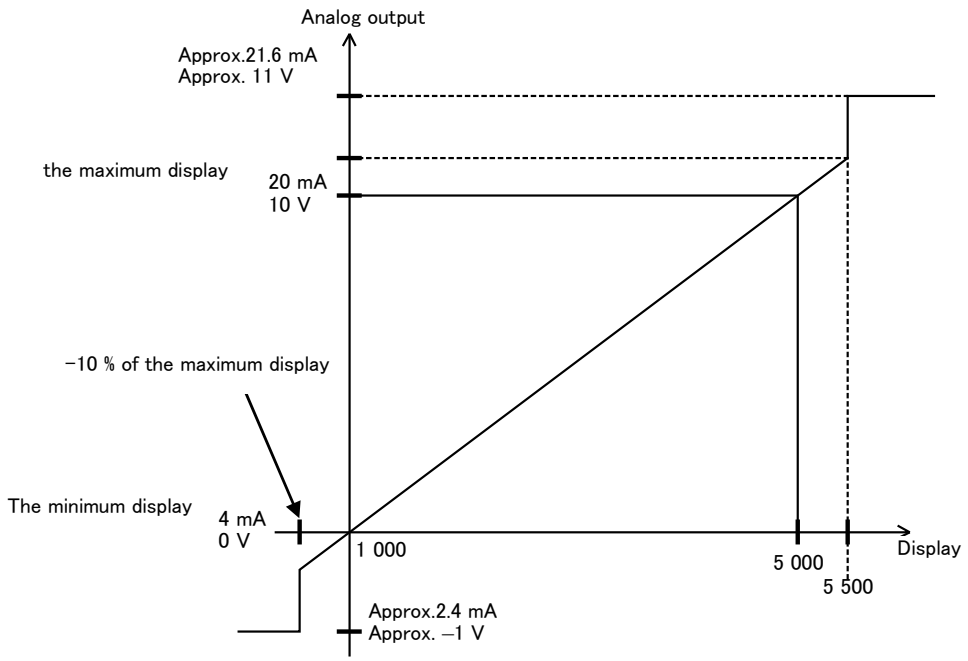

- **The setting of CF-72 must not exceed the weighing capacity set in clause 4.**
- **Please set the smaller value in CF-71 than the value set in CF-72.**

16-1-6. Fine adjustment of analog output

After the analog output scaling is executed by setting C function CF-71 and CF-72, the fine adjustment is executed by the trimmer ZERO and the trimmer SPAN.

The range of the fine adjustment is approx.±10 % against the full scale.

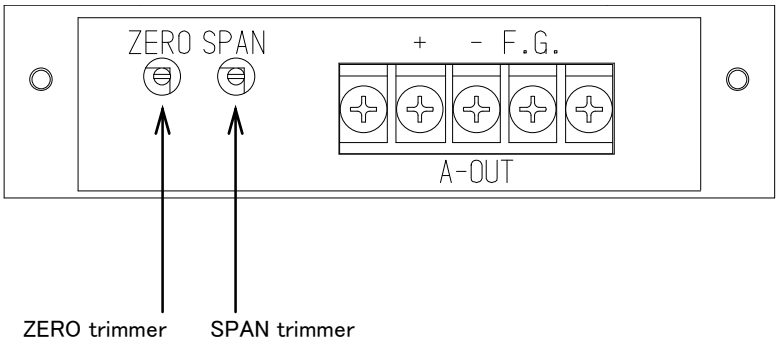

16-2. BCD output

16-2-1. Specifications of BCD output (P/No. : CSD903-P15)

Specifications	Input/Output	Contents
BCD data	Output	8 digit parallel output.
POL. (Polarity)	Output	ON by minus polarity output, and OFF by plus polarity output.
P.C. (Print command)	Output	Turning on during the fixed time after the conversion of BCD output.
ERROR	Output	ON when the error occurs.
OVER	Output	ON synchronizing with the OL display (Over load).
Decimal point 10^1, Decimal point 10^2, Decimal point 10^3 Decimal point 10^4	Output	ON synchronizing with the decimal point display setting.
Stable	Output	ON when stability is detected.
Gross value	Output	ON when the gross data is output.
HOLD	Input	HOLD of BCD output.
BCD-ENABLE	Input	The BCD output is compulsorily put into the high impedance condition.

16-2-2. Operation mode of BCD output

The operation mode of BCD output is selected by the setting of function F-30.
The operation mode of BCD output can be selected from [Stream mode], [Synchronizing with print], [Synchronizing with accumulation] and [Synchronizing with finish].
Default is set to [Stream mode].

16-2-3. Target of BCD output

The target of BCD output is selected by the setting of function F-31.

Function No.	Set value	Contents
F-31	0	Display interlock
	1	Gross value
	2	Net value
	3	Tare value
	4	Accumulated total value
	5	Accumulated count

Default is set to [Display interlock].

16-2-4. Logic of BCD output

The logic of BCD output is selected by the setting of function F-32.

Function No.	Set value	Contents
F-32	0000～1111	0 0 0 0 Digital output logic (Load data, Decimal point data) POL. logic (Polarity) Flag logic (ERROR, OVER, Stable, Gross value) P.C. logic (Print command) 0 : Negative logic 1 : Positive logic

Default is set to [All negative logic].

16-2-5. Width of P.C. (Print command)

The width of print command is selected by the setting of function F-33.
The width of print command is selected from [125 ms], [25 ms] and [5 ms].
Default is set to [25 ms].

The print command becomes unstable in the starting period because of converting the BCD data.
Please read correct BCD data according to the timing of the falling down of the print command.

16-2-6. BCD output times

The times of the BCD output is selected by the setting of function F-34.
The time of the BCD output is selected from [100 times/s], [20 times/s] and [4 times/s].
Default is set to [4 times/s].

16-2-7. Pin configuration of BCD output connector

Pin No.	Input/Output	BCD code		Pin No.	Input/Output	BCD code	
1	Output	1	10^0	26	Output	1	10^5
2	Output	2		27	Output	2	
3	Output	4		28	Output	4	
4	Output	8		29	Output	8	
5	Output	1	10^1	30	Output	1	10^6
6	Output	2		31	Output	2	
7	Output	4		32	Output	4	
8	Output	8		33	Output	8	
9	Output	1	10^2	34	Output	1	10^7
10	Output	2		35	Output	2	
11	Output	4		36	Output	4	
12	Output	8		37	Output	8	
13	Output	1	10^3	38	Output	Decimal point 10^1	
14	Output	2		39	Output	Decimal point 10^2	
15	Output	4		40	Output	Decimal point 10^3	
16	Output	8		41	Output	Decimal point 10^4	
17	Output	1	10^4	42	Output	Stable	
18	Output	2		43	—	N.C.	
19	Output	4		44	Output	Gross value	
20	Output	8		45	Input	BCD-ENABLE	
21	—	N.C.		46	Output	OVER	
22	—	N.C.		47	Output	P.C.	
23	Output	POL.		48	Output	P.C.	
24	—	COM.3		49	Input	HOLD	
25	Output	ERROR		50	—	COM.3	

Suitable plug: 57-30500 (DDK)

- **Do not connect with N.C. pin.**
- **The external control input COM. (two pins) and the COM. for BCD output are common.**
- **The internal circuit and photo-coupler is insulated.**
- **The output is turned off except for the measurement mode.**
- **To suit the instrument with the CE conformity or applied JIS standard, please use a shielded cable and connectors attached metallic shells. Shield and connector's metallic shell parts are attached directly.**

16-2-8. Equivalent circuit of input/output

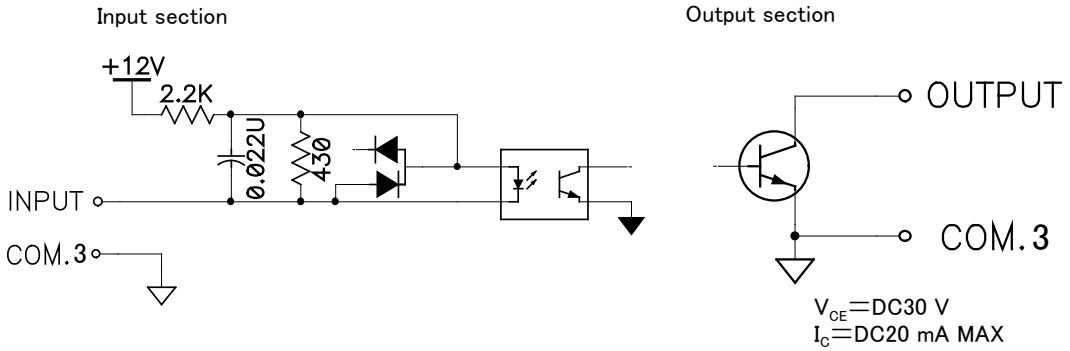

16-2-9. Timing chart

(1) Normal

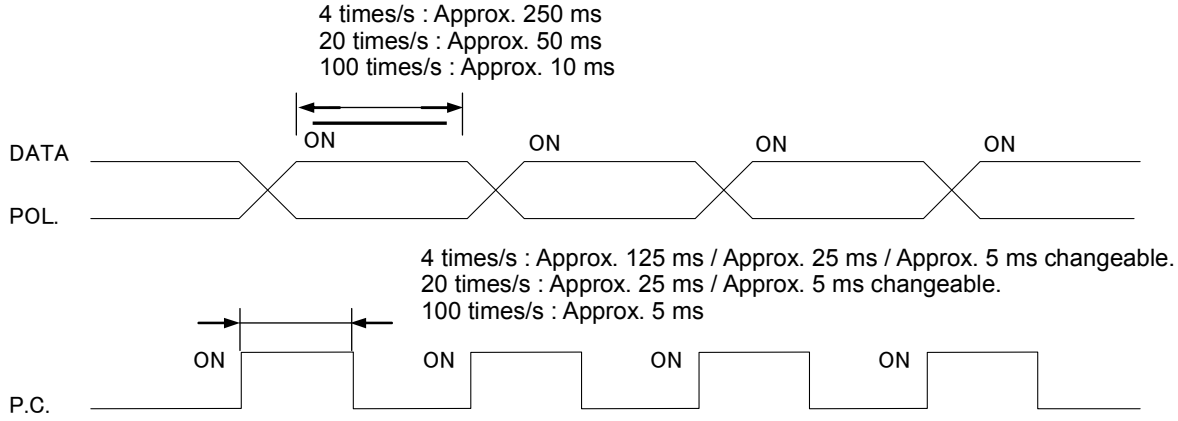

At the time of data output of each P.C., DATA and POL., output transistor will become ON (Negative logic electrically).

(2) When the data is over

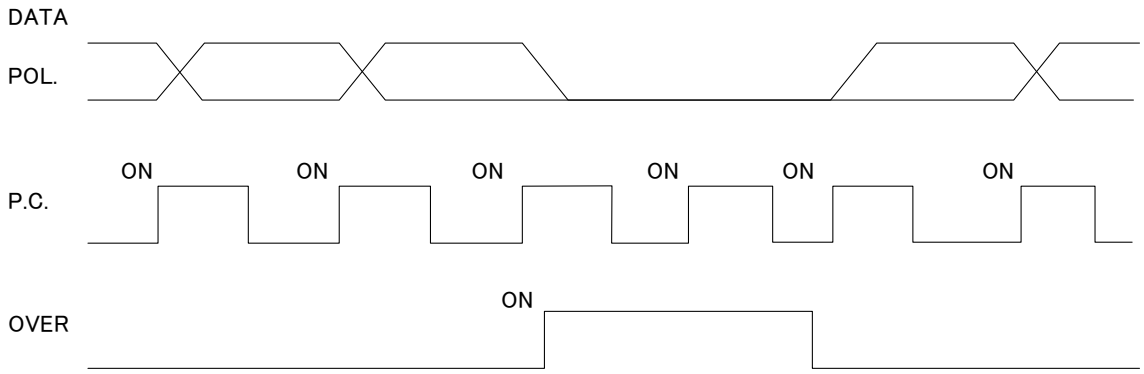

At the time of OVR output, output transistor will at the OVER signal will become ON (Negative logic electrically). Moreover, for all of the DATA, output transistor will become OFF (Positive logic electrically) at the time of OVER output. (However, for the POL., normal OFF at the [OL], and normal ON at the [−OL]).

(3) When error is occurred

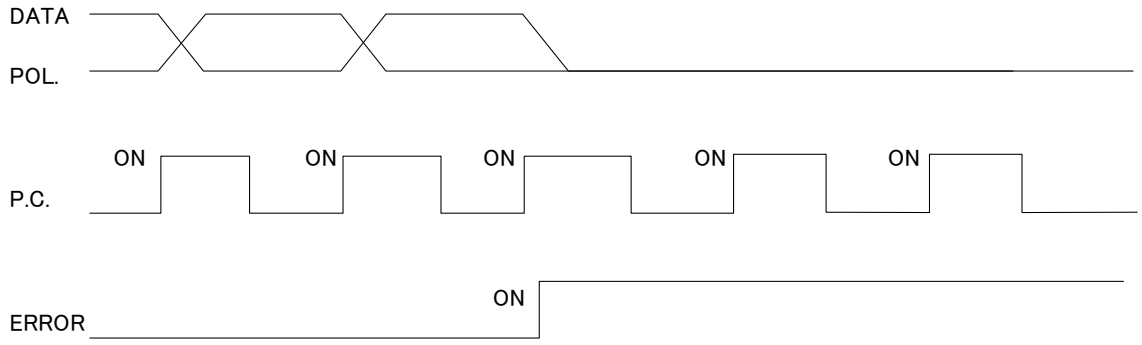

At the time of ERROR output, output transistor at ERROR signal will become ON (Negative logic electrically). Moreover, for each DATA, POL., all of the output transistor will become OFF at the time of ERROR output (Positive logic electrically).

(4) When the hold signal is input

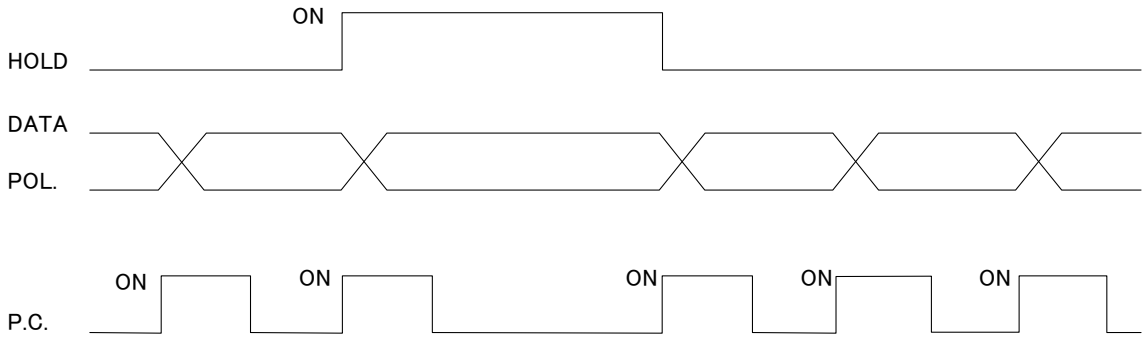

- **The input operation of HOLD signal is executed after the short circuit for approx. 100 ms or more.**
- **At the time of HOLD signal input, the output transistor of P.C. will be OFF condition (Positive logic electrically). However, as for P.C., OFF condition will be made after one (1) shot of operation.**

16-2-10. Output condition

Setting output logic	Output data	Condition of transistor	Pin-COM level at the time of voltage supply externally.
Negative logic	Yes	ON	L
	No	OFF	H
Positive logic	Yes	OFF	H
	No	ON	L

16-3. RS-232C and RS-422/485 interface

16-3-1. Specifications for RS-232C interface (P/N: CSD903-P74)

Specification	Contents
Communication method	Half duplex
Synchronous method	Start-stop synchronous method
Baud rate	Selectable from 1 200, 2 400, 4 800, 9 600, 19 200 and 38 400 bps
Data bit length	Selectable from 7 bit and 8 bit
Parity bit	Selectable from No-parity,Even parity and Odd parity.
Stop bit	Selectable from 1 bit and 2 bit
Terminator	Selectable from CR＋LF and CR
Transmission data	ASCII code
Cable length	Within 15 m.
Input/Output monitor	With LED (TXD and RXD)

16-3-2. RS-422/485 interface specifications (P/N: CSD903-P76)

Specification	Contents
Communication method	Half duplex
Synchronous method	Start-stop synchronous method
Baud rate	Selectable from 1 200, 2 400, 4 800, 9 600, 19 200 and 38 400 bps
Data bit length	Selectable from 7 bit and 8 bit
Parity bit	Selectable from none, Even parity and Odd parity.
Stop bit	Selectable from 1 bit and 2 bit
Terminator	Selectable from CR＋LF and CR
Transmission data	ASCII code
Cable length	Approx. 1 km
Address	Select one from 0 to 31
No. of connectable unit	32 units at maximum (RS-422 : 10 units)
Termination resistance	Built-in (Yes/No is selectable by the connection of terminal boards.)
Input / Output monitor	With LED (TXD and RXD)

16-3-3. Operating mode of RS-232C and RS-422/485

The operation mode of RS-232C is selected by the setting of function F-40.
The operation mode of RS-232C is selectable from [Command mode], [Stream mode] and [Synchronized with print].
Default is selected as [Command mode].
The operation mode of RS-422/485 is selected by the setting of the function F-49.
The operation mode of RS-422/485 is selectable from [Command mode], and [Stream mode].
Default is selected as [Command mode].

When you select the stream mode, the data keeps being output at constant intervals. Also, control from the host becomes impossible.

(1) Command mode

Data is sent back from CSD-903 to the host side according to the command/data by sending the command/data to CSD-903 provided by the host (personal computer or sequencer, etc.).
Please communicate according to the following procedure.

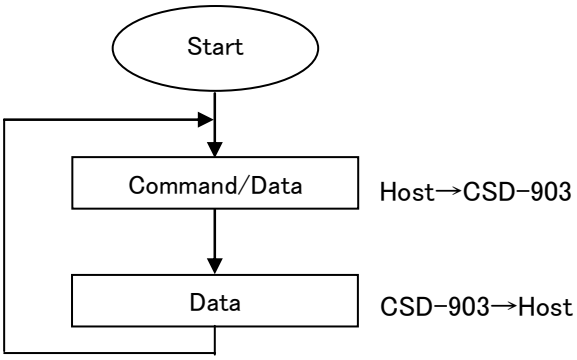

(2) Stream mode

When RS-232C, RS-422/485 is used, it keeps outputting the latest data of the output target selected by function F-41. However, the output frequency changes by setting the baud rate.

(3) Synchronizing with print

When RS-232C is used, the data of the output target selected by function F-41 is output synchronizing with the print signal (F key, external control input, and automatic print).

- **The communicating operation is executed only in the measurement mode. The error code is transmitted in the other mode.**
- **It does not respond in the stand-by condition.**
- **The flow control is not executed in the CSD-903.**
- **The CTS/RTS signal isn't applied.**
- **The X flow control isn't performed.**
- **The communication operation is an interactive mode.**

16-3-4. Output target at synchronizing with RS-232C print in stream mode RS-232C and RS-422/485

The output target of RS-232C and RS-422/485 is selected by the setting of function F-41.

The output target of RS-232C and RS-422/485 is selectable from [Display interlock], [Gross value], [Net value], or [Conditional load display data].

Default is set as [Display interlock].

- **When RS-232C interface is equipped with, the setting of function F-41 becomes valid under the setting of function F-40 being [1~4].**
- **When RS422/485 interface is equipped with, this becomes valid under the setting of function F-49 being [1].**

16-3-5. Specifications of communication by RS-232C and RS-422/485

The specification of the communication by RS-232C or RS-422/485 is selected by function F-42.

Function No.	Set value	Contents
F-42	00000 ~ 15121	0 0 0 0 0 Data bit length: 0: 7 bit or 1: 8 bit Parity bit: 0: No parity 1: Even parity 2: Odd parity Stop bit: 0: 1 bit or 1: 2 bit Baud rate: 0: 1 200 bps, 1: 2 400 bps 2: 4 800 bps, 3: 9 600 bps 4: 19 200 bps, 5: 38 400 bps Terminator: 0: CR or 1: CR+LF

Default is set to [13020].

16-3-6. Address setting of RS-422/485

The address setting of RS-422/485 is set by the setting of function F-43.
Setting range: 00 ~ 31
Default is set to [00].

16-3-7. Changeover of RS-422/485

The changeover of RS-422 and RS-485 is executed by the setting of function F-44.
Default is set to [RS-422].

16-3-8. Delay time of RS-485 return data

When the transmitting terminal on the host side enters the state of low impedance after the host side transmission ends, the return data of the CSD-904 side can be delayed.
The delay time of RS-485 return data is set by the function F-45.
Setting range : 0～9, Unit : 0.1 s
Default is set to [1].

16-3-9. Transmission data decimal point existence of RS-232C and RS-422/485

The transmission data decimal point existence of RS-232C is selected by function F-46.
Default is set to [No decimal point].

16-3-10. Pin configuration of RS-232C connector

Pin No.	Signal Name
1	CD
2	TXD
3	RXD
4	N.C.
5	S.G.
6	N.C.
7	RTS
8	CTS
9	N.C.

Suitable plug: DE-9S-NR by JAE or equivalent. ※Not attached.

- **The screws for the fixing base of plug at the connector of RS-232C interface is inch type thread.**
- **Do not connect with N.C. pin.**
- **The internal circuit and photo-coupler is insulated.**
- **The external control in put COM. (two pins) and S.G. for RS-232C are common.**
- **The internal circuit and photo-coupler is insulated.**
- **To suit the instrument with the CE conformity or applied JIS standard, please use a shielded cable and connectors attached metallic shells. Shield and connector's metallic shell parts are attached directly.**

(1) Wiring of RS-232C No.1

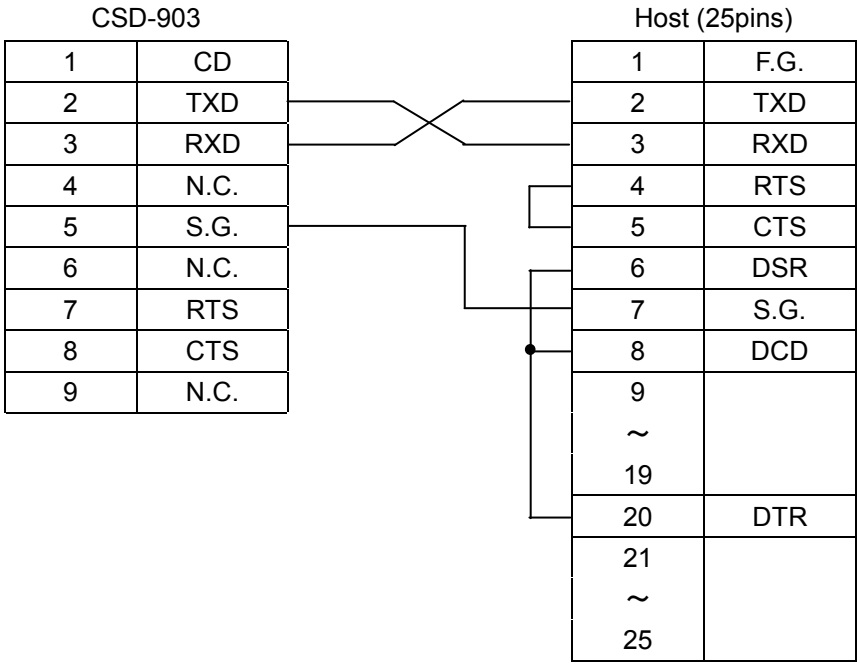

(2) Wiring of RS-232C No.2

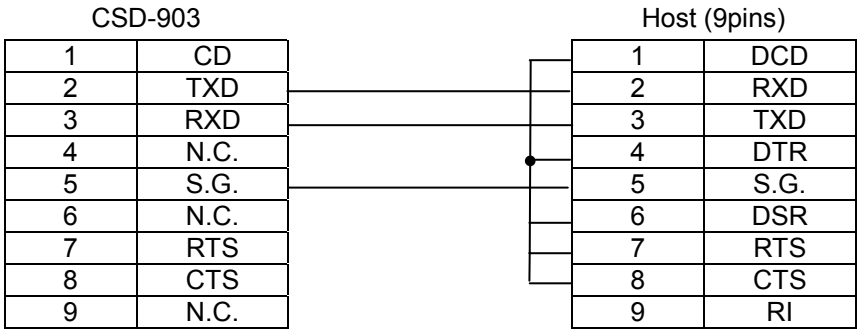

16-3-11. Pin configuration of RS-422/485 terminals

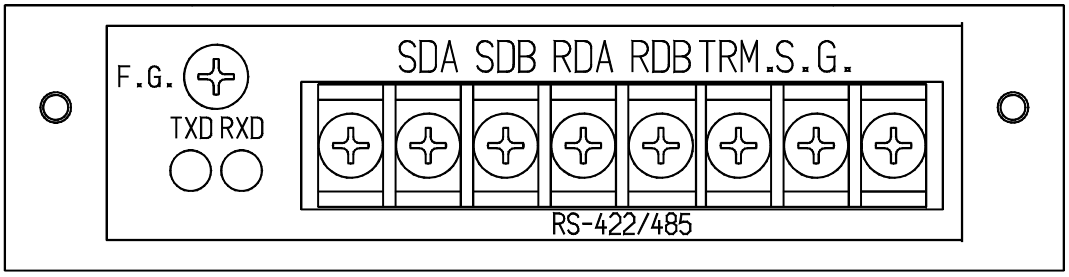

SDA	Difference output (+)
SDB	Difference output (-)
RDA	Difference input(+)
RDB	Difference input(-)
TRM	Cable end resistance
S.G.	Signal ground

- **Please connect the internal terminating resistance by shortening between the TRM terminal and RDB terminal which is the furthest from the host. (personal computer, sequencer, etc).**
- **For the connection, we recommend to apply twisted pair wires.**
- **The external control input COM. (two pins) and the S.G. for RS-422/485 are common.**
- **Internal circuit and photo-coupler is insulated.**
- **To suit the instrument with the CE conformity or applied JIS standard, please use a shielded cable and connect the shield to the serial interface output terminal board.**

(1) Wiring of 1 to 1

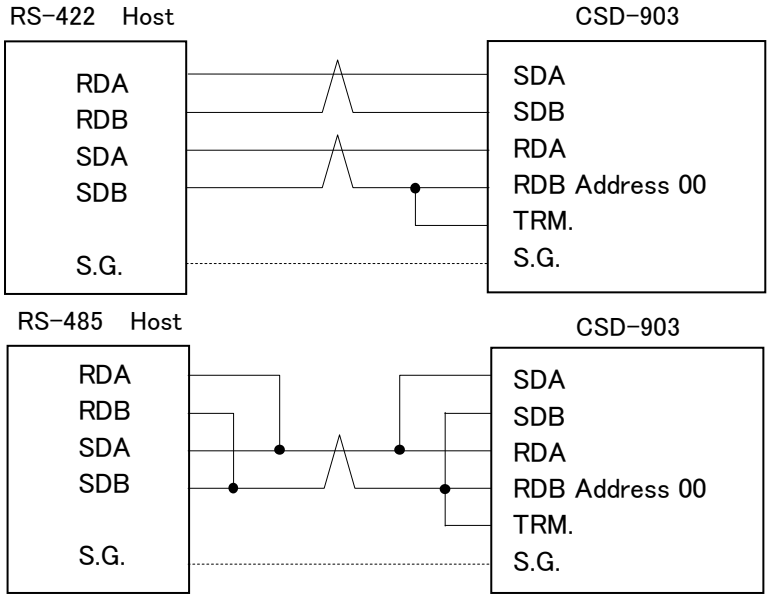

(2) Wiring of 1 to n

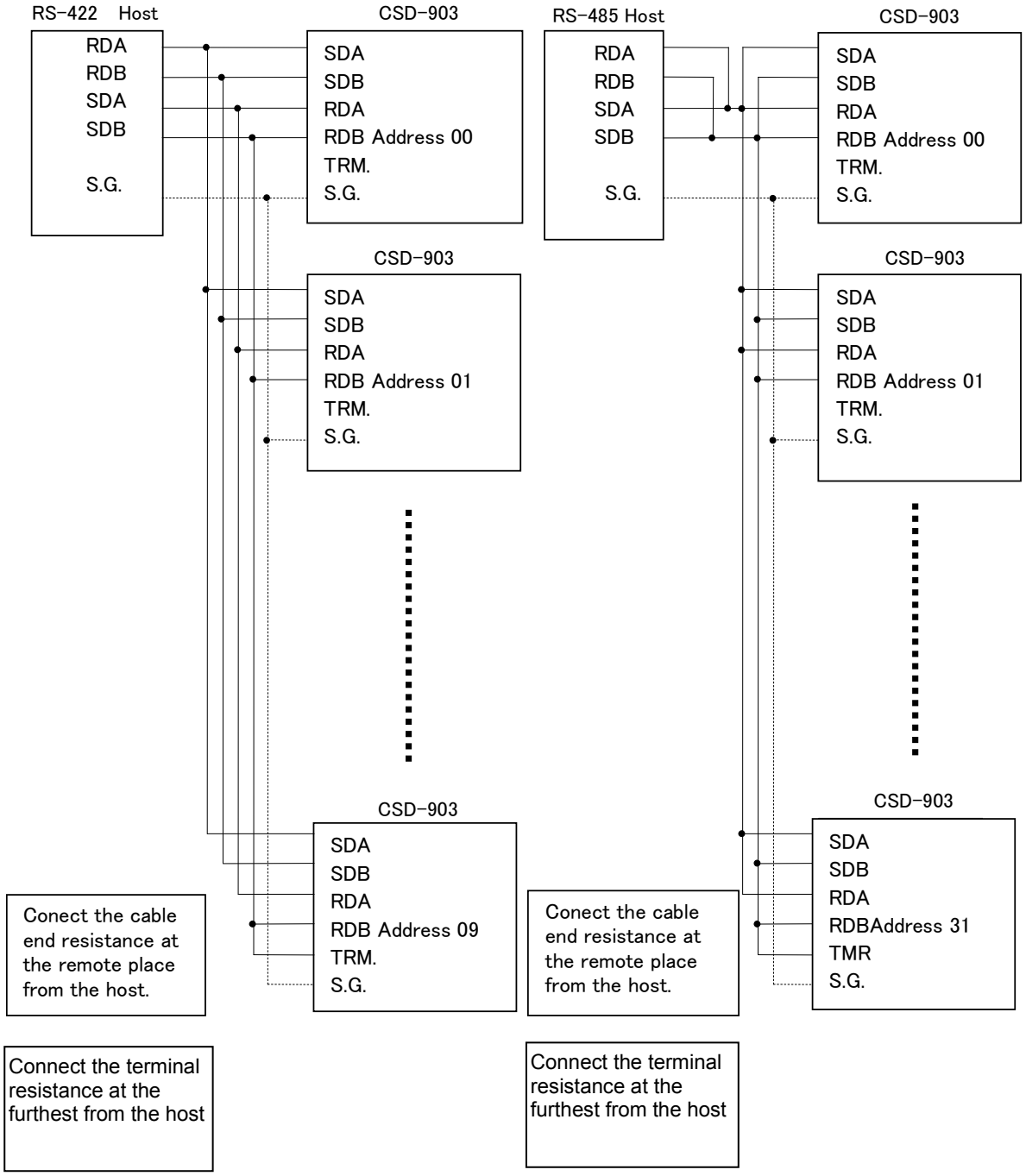

- **There may have no S.G depends on the equipment on the host side.**
- **The polarity of the signal of the host computer may have an opposite case depending on the instrument.**
- **Depending on the instrument at the side of host, there may have the case of no SG terminal.**
- **For the connection, we recommend you to use twist pair wires.**

16-3-12. Data format of command mode

- **The address becomes [00] fixation for the RS-232C interface.**
- **The load data enters from the right.**
- **The sign of [-] for minus and [+] for plus is entered.**
- **The load data performs zero suppress.**
- **The decimal point adheres to a specified position when the decimal point is set with F-46 and when decimal point is specified with CF-01.**
- **The decimal point adheres to a specified position when the decimal point is set with F-46 and when decimal point is specified with CF-01.**
- **The empty sections are all spaces.**
- **The display range of command number 24 accumulation value readout (8 digits) is from –19 999 999 to 99 999 999. The display range of command number 27 accumulation value readout (10 digits) is from –9 999 999 999 to 9 999 999 999.**

(1) Reading out the load data (Host → CSD-903)
When command number is from 20 to 25

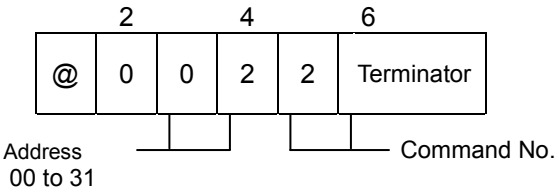

Command No.	Operation
20	Reading out load data
21	Reading out gross value
22	Reading out net value
23	Reading out tare value
24	Reading out accumulation value (8 digits)
25	Reading out accumulation times
26	Reading out conditional load display data
27	Reading out accumulation value (10 digits)

Return (CSD-903 → Host)

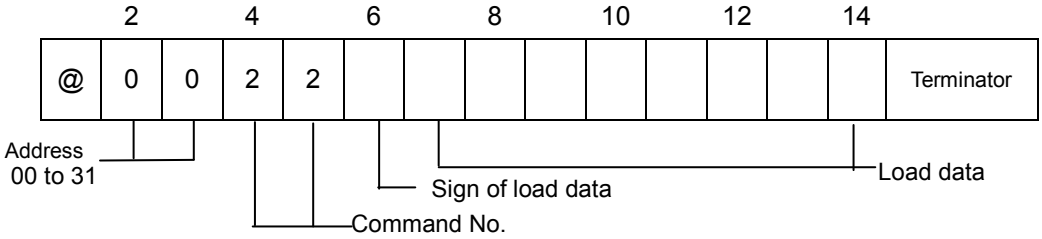

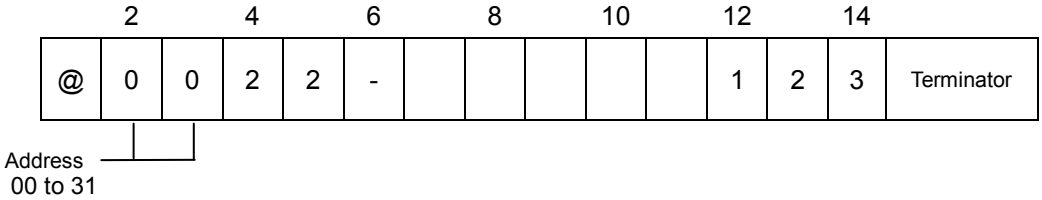

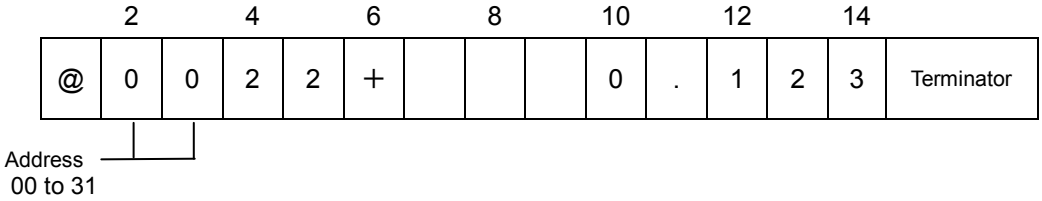

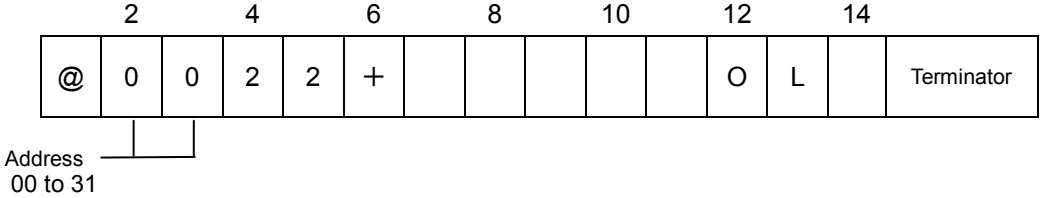

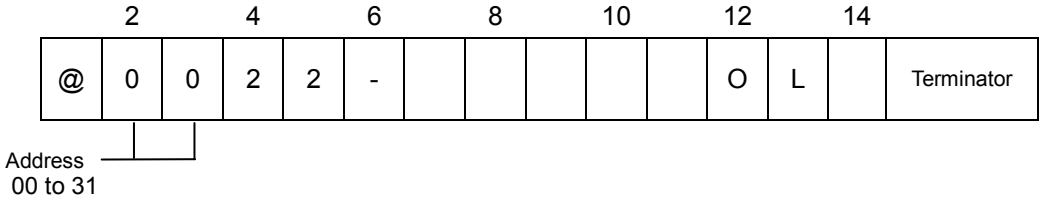

When command number is 26

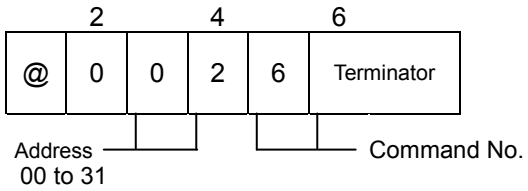

Return (CSD-903 → Host)

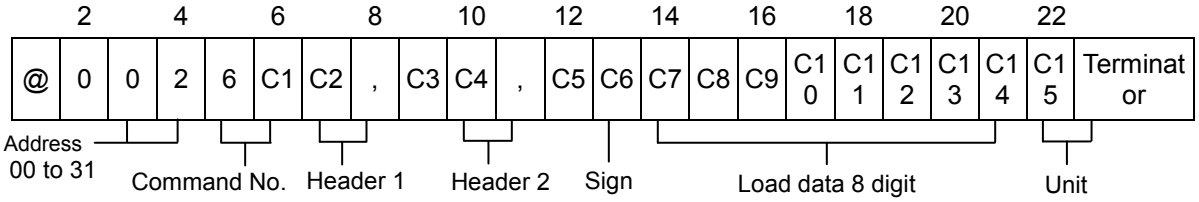

Header 1			Header 2			Sign		Load data 8 digit								Unit		
C1	C2	Contents	C3	C4	Contents	C5	Contents	C6	C7	C8	C9	C10	C11	C12	C13	C14	C15	Contents
O	L	Over load	N	T	Net value	＋	Plus						1	2	3		g	gram
S	T	Stable	G	S	Gross value	－	Minus				0	.	1	2	3	k	g	Kilo-gram
U	S	Unstable											O	L			t	ton
																l	b	pound
																	N	Newton
																k	N	Kilo-Newton

When command number is 27

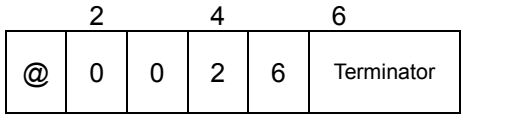

Return (CSD-903 → Host)

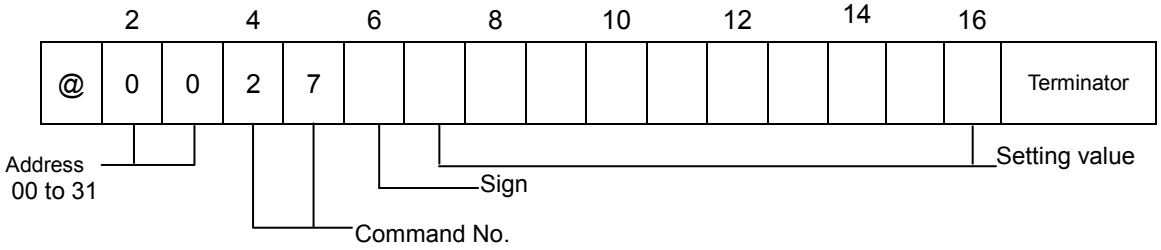

(2) Reading out the measurement setting data (Host → CSD-903)

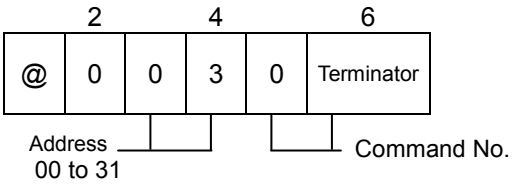

Command No.	Operation
30	Reading out fixed value (SET1)
31	Reading out free fall (SET2)
32	Reading out prior to fixed value 1 (SET3)
33	Reading out prior to fixed value 2 (SET4)
34	Reading out over (SET5)
35	Reading out under (SET6)
36	Reading out full (SET8)
37	Reading out near zero (SET7)
38	Reading out preset tare weight value
39	Reading out effective brand number
3A	Reading out setting brand number

Return (CSD-903 → Host)

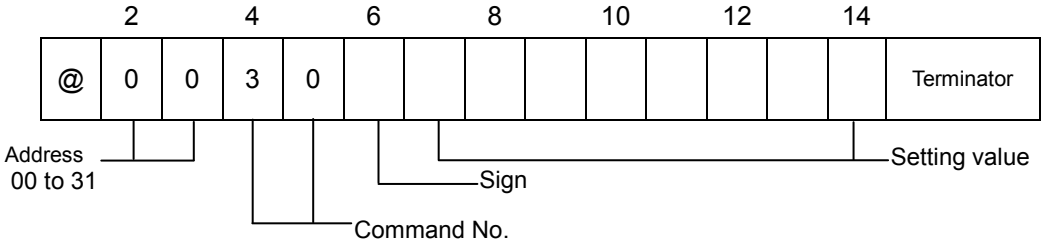

(3) Reading out the comparison data (Host → CSD-903)

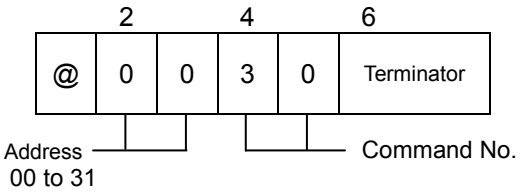

Command No.	Operation
30	Reading out S1 setting
31	Reading out S4 setting
32	Reading out S3 setting
33	Reading out S2 setting
36	Reading out Full
37	Reading out near zero
38	Reading out tare
39	Reading out effective brand number
3A	Reading out setting brand number

Return (CSD-903 → Host)

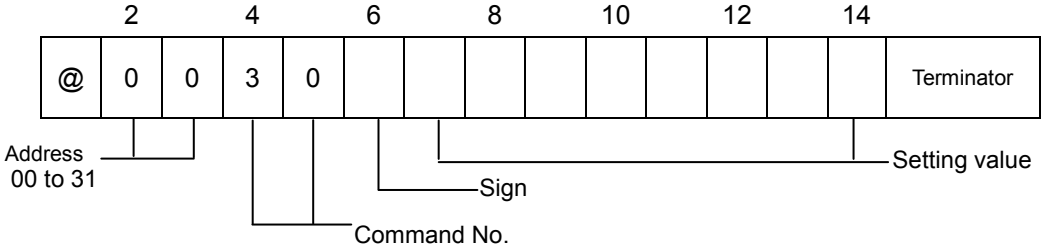

(4) Reading out condition 1 (Host → CSD-903)

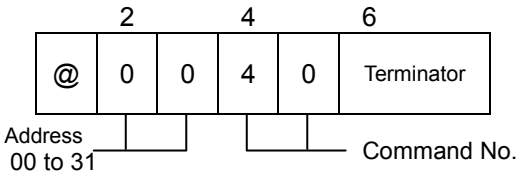

Command No.	Operation
40	Reading out condition 1

Return (CSD-903 → Host)

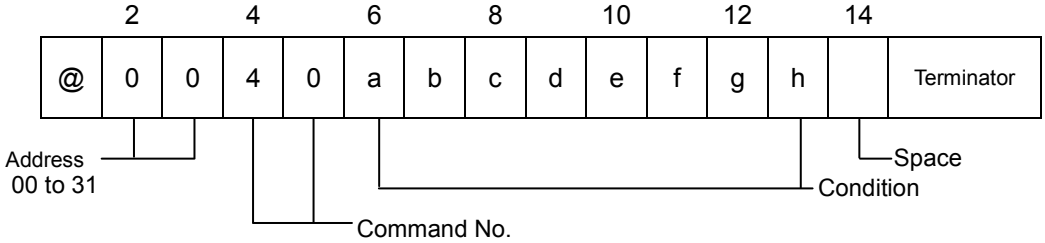

a : Accumulate [1] = ON, [0] = OFF
b : Preset tare [1] = ON, [0] = OFF
c : Tare [1] = ON, [0] = OFF
d : Gross [1] = ON, [0] = OFF
e : Net [1] = ON, [0] = OFF
f : Center of Zero [1] = ON, [0] = OFF
g : Hold [1] = ON, [0] = OFF
h : ERROR [1] = ON, [0] = OFF

(5) Reading out condition 2 (Host → CSD-903)

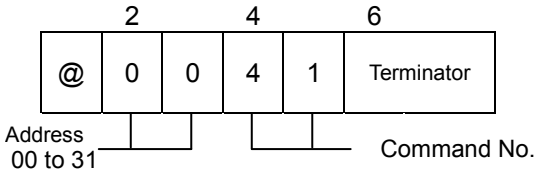

Command No.	Operation
41	Reading out condition 2

Return (CSD-903 → Host)

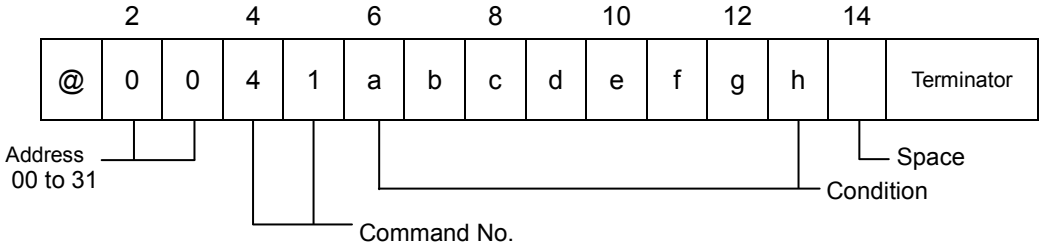

a : Near zero [1] = ON, [0] = OFF
b : F.flow/S1 [1] = ON, [0] = OFF
c : M.flow/S2 [1] = ON, [0] = OFF
d : D.flow/S3 [1] = ON, [0] = OFF
e : Over/S4 [1] = ON, [0] = OFF
f : OK/S0 [1] = ON, [0] = OFF
g : Under [1] = ON, [0] = OFF
h : Full [1] = ON, [0] = OFF

(6) Reading out condition 3 (Host → CSD-903)

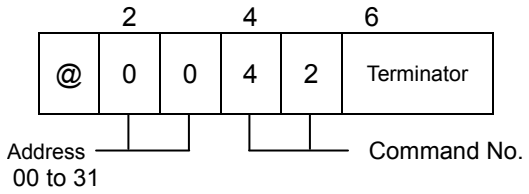

Command No.	Operation
42	Reading out condition 3

Return (CSD-903 → host)

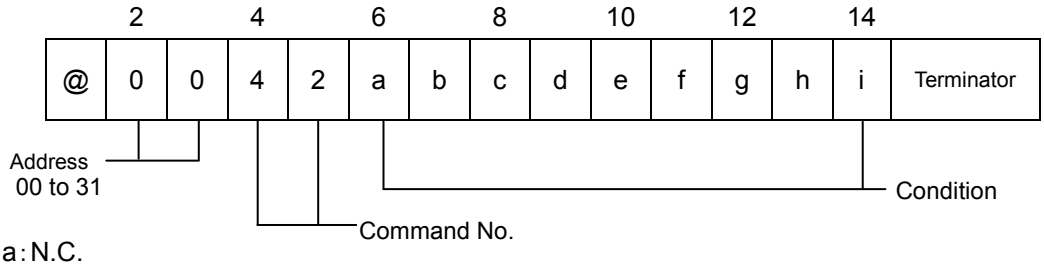

a : N.C.
b : DISCHARGE (GATE OPEN) [1] = ON, [0] = OFF
c : BATCH FINISH [1] = ON, [0] = OFF
d : N.C.
e : DISCHARGE FINISH [1] = ON, [0] = OFF
f : N.C.
g : N.C.
h : During measuring [1] = ON, [0] = OFF
i : Sequence ERROR [0] = No ERROR, [1 ~ a] = Sequence ERROR No.
Refer to [20.Sequence error].

(7) Reading out ROM version (Host → CSD-903)

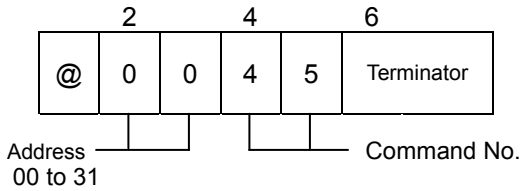

Command No.	Operation
45	Reading out ROM version

At normal operation
Return (CSD-903 → host)

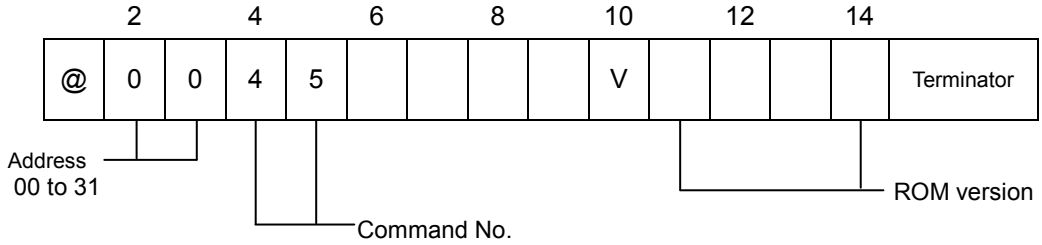

At abnormal operation
Return (CSD-903 → host)

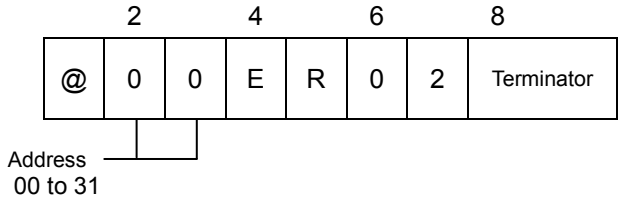

(8) Change of condition (Host → CSD-903)

2	4	6			
@	0	0	5	0	Terminator

Address 00 to 31 — Command No.

At normal operation
Return (CSD-903 → Host)

2	4	6			
@	0	0	5	0	Terminator

Address 00 to 31 — Command No.

At abnormal operation
Return (CSD-903 → Host)

2	4	6				8	
@	0	0	E	R	0	2	Terminator

Address 00 to 31

Command No.	Operation
50	GROSS DISPLAY
51	NET DISPLAY
52	ZERO
53	Zero clear
54	Tare
55	Tare clear
56	Batch start
58	Discharge start
5C	Accumulation command
5D	Clear the last accumulated data
5E	Accumulation clear
5F	Accumulation clear for all brands
5I	Error cancellation
5J	Emergency stop

The error is transmitted under the following condition:

- **When you cannot execute the zero set outside the effective range when zero set by command NO.52 is executed.**
- **When you cannot execute the tare weight cancellation due to the [±OL] display when tare weight cancellation by [Command NO.54] is executed.**
- **When you cannot execute the accumulation because the accumulating value overflowed, when the accumulation by command NO.5C is executed.**

(9) Writing the measurement setting data (Host → CSD-903)

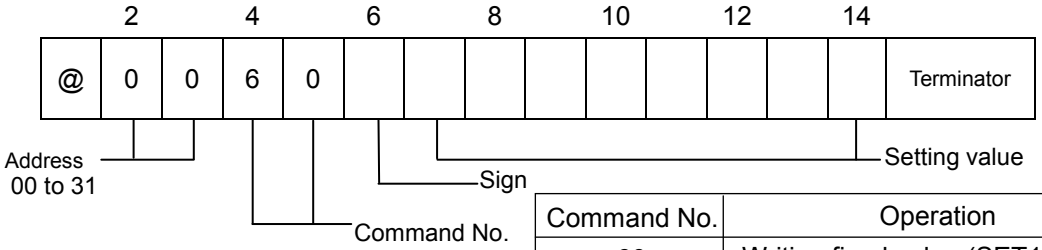

Command No.	Operation
60	Writing fixed value (SET1)
61	Writing free fall (SET2)
62	Writing prior to fixed value 1 (SET3)
63	Writing prior to fixed value 2 (SET4)
64	Writing over (SET5)
65	Writing under (SET6)
66	Writing full (SET8)
67	Writing near zero (SET7)
68	Writing tare
69	Writing effective brand number
6A	Writing setting brand number

At normal operation
Return (CSD-903 → host)

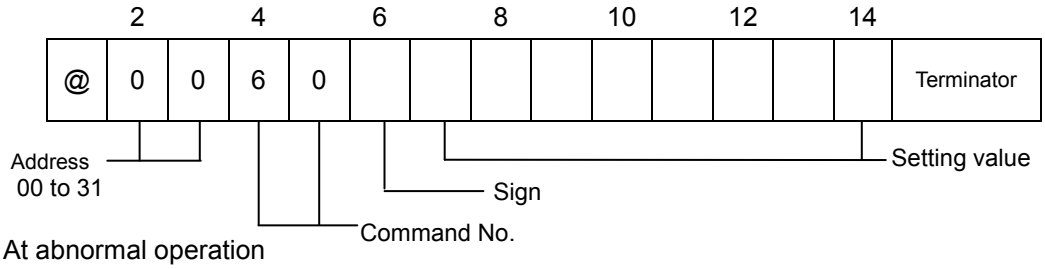

At abnormal operation
Return (CSD-903 → host)

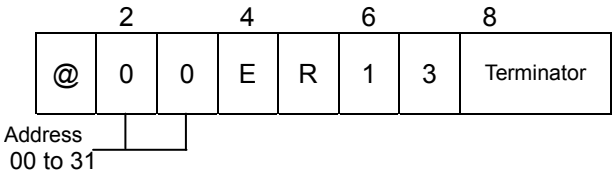

- **Please enter the set value by right justify.**
- **Please do not put the decimal point.**
- **Please set the stored place to the internal RAM when the set value is continuously changed, and the rewriting time of EEPROM might exceed about one million times.**
- **Please do not change in the set value under the measurement because the A/D sampling rate decreases temporarily while rewriting the set value. Please set the storing place to the internal ROM when you change the set value during the measurement.**
- **To write the effective brand number for [Command No. 69], set function F-51 to [2].**
- **Measurement setting data writing allows the setting to be changed for the brand number selected by the setting brand number in [Command No. 6A].**

The condition of the error transmission becomes as follows.

- **When there is a disagreement in the scale interval value.**
- **When you set the value that exceeds the specified value.**
- **When you set characters other than the numerical value in the set value.**
- **When you set characters other than +/- is sign part.**

(10) Writing the comparative setting data (Host → CSD-903)

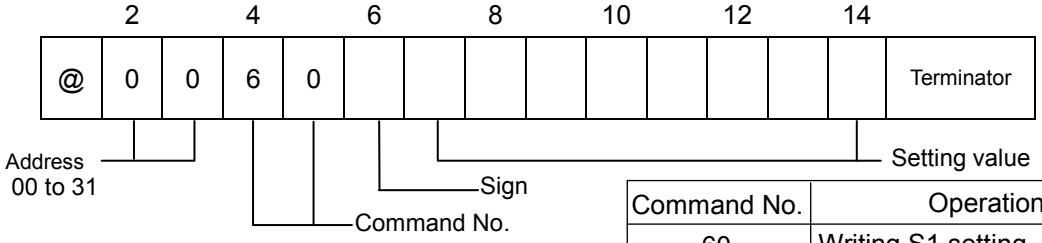

Command No.	Operation
60	Writing S1 setting
61	Writing S4 setting
62	Writing S3 setting
63	Writing S2 setting
66	Writing Full
67	Writing near zero
68	Writing tare
69	Writing effective brand number
6A	Writing setting brand number

At normal operation
Return (CSD-903 → host)

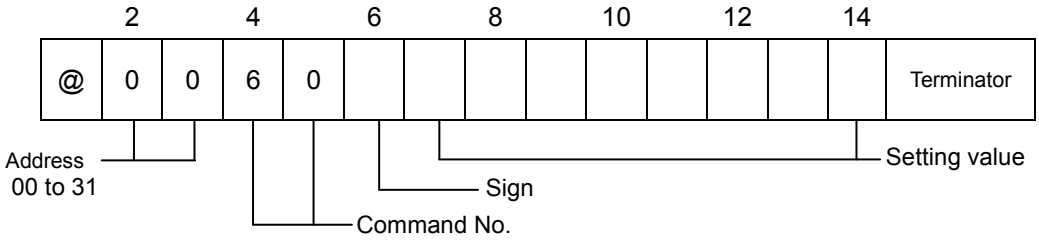

At abnormal operation
Return (CSD-903 → host)

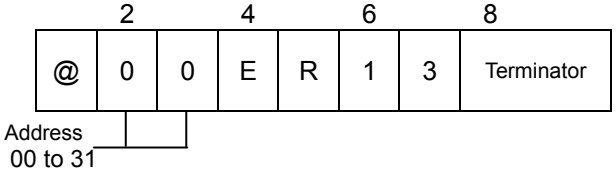

- **Please enter the set value by right justify.**
- **Please do not put the decimal point.**
- **Please set the stored place to the internal RAM when the set value is continuously changed, and the rewriting time of EEPROM might exceed about one million times.**
- **Please do not change in the set value under the measurement because the A/D sampling rate decreases temporarily while rewriting the set value. Please set the storing place to the internal ROM when you change the set value during the measurement.**
- **To write the effective brand number for [Command No. 69], set function F-51 to [2].**
- **Comparison value setting data writing allows the setting to be changed for the brand number selected by the setting brand number in [Command No. 6A].**

The condition of the error transmission becomes as follows.

- **When there is a disagreement in the scale interval value.**
- **When you set the value that exceeds the specified value.**
- **When you set characters other than the numerical value in the set value.**
- **When you set characters other than +/- in sign part.**

(11) Reading out set values (host →CSD-903)

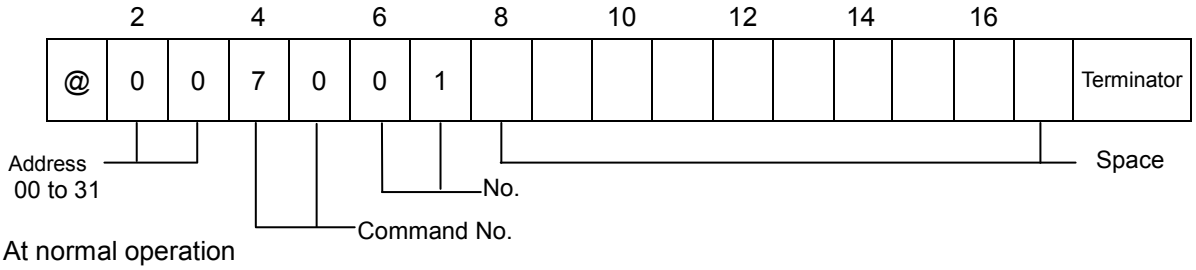

At normal operation
Return (CSD-903 → host)

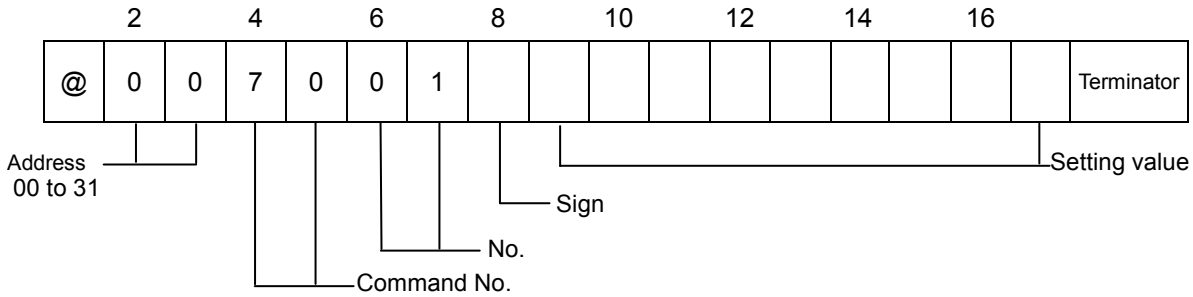

At abnormal operation
Return (CSD-903 → host)

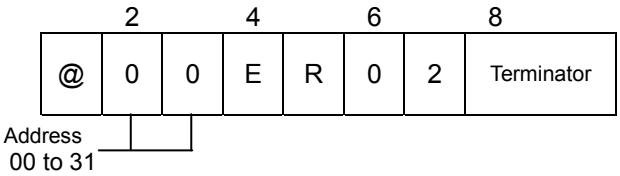

(12) Writing set values (host →CSD-903)

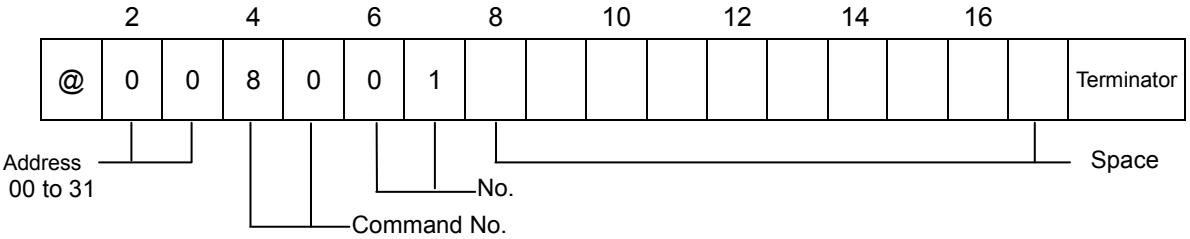

At normal operation
Return (CSD-903 → host)

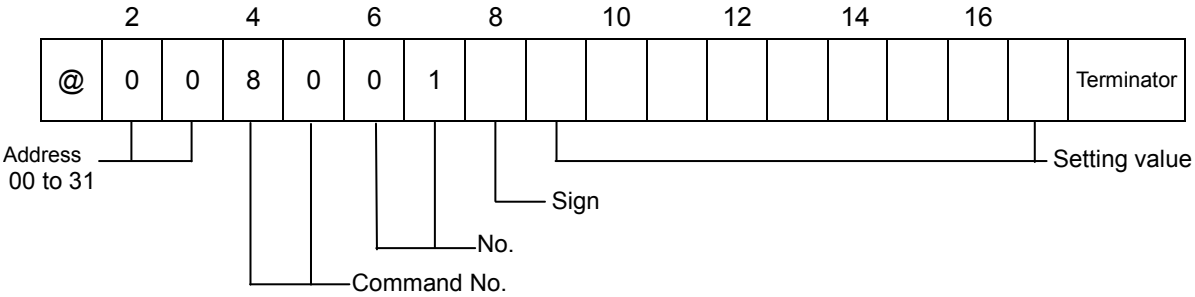

At abnormal operation
Return (CSD-903 → host)

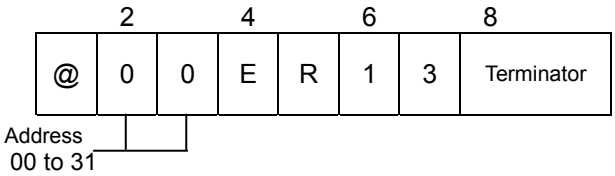

- **Please enter the set value by right justify.**
- **Please do not put the decimal point.**
- **Please do not change in the set value under the measurement because the A/D sampling rate decreases temporarily while rewriting the set value.**

A list of Reading out commands

Item	Function No.	Number	Set value of Return command
Setting the digital filter	70	01	1 ~ 256 (Unit : Moving average time 1 times)
Setting the analog filter	70	02	0 : 2 Hz, 1 : 4 Hz, 2 : 6 Hz, 3 : 8 Hz, 4 : 10 Hz
Display time	70	04	0 : 4 times/s, 1 : 20times/s
Setting of stabilization filter	70	05	1 ~ 256 (Unit : Moving average time 1 times)
Data width of stabilization filter	70	06	0 ~ 999 (Unit : 0.1D)
Time width of stabilization filter	70	07	00 ~ 99 (Unit : 0.1 s)
Lock the key 1	70	08	0000 ~ 1111 (0 : Invalid, 1 : Valid) 10^0 digit : key for ON/OFF 10^1 digit : key for setting 10^2 digit : key for accumulation 10^3 digit : key for the set of tare weight
Lock the key 2	70	09	0000 ~ 1111 (0 : Invalid, 1 : Valid) 10^0 digit : key for tare weight cancellation 10^1 digit : key for net or gross weight 10^2 digit : key for zero set 10^3 digit : key for F
Stability detection data width	70	10	000 ~ 999 (Unit : 0.1D)
Stability detection time	70	11	00 ~ 99 (Unit : 0.1 s)
Operating condition of preset tare weight cancellation	70	15	0 : Effective, 1 : Invalid
Automatic print operation	70	16	00 ~ 11 10^0 digit : manual print operation effective only in the stable. 0 : effective only in the stable 1 : always effective 10^1 digit : Automatic print operation. 0 : turn off the automatic printing 1 : automatic printing in the stable
Hold operation	70	17	0 : Synchronizing with Hold 1 : Synchronizing with Batch Finish
Holding target	70	18	0000 ~ 1111(0 : Invalid, 1: Valid) 10^0 digit : Display 10^1 digit : Comparison result 10^2 digit : CC-Link interface 10^3 digit : Serial interface

Please change [7*] of above mentioned command to [8*] about the command at the time of writing.

Item	Function No.	Number	Set value of Return command
Sub display section	70	19	0: OFF 1: A Brand (1 digit) / Accumulation times (6 digits) / Accumulation value (8 digits) 2: B Brand (1 digit) / Accumulation times (6 digits) / Last accumulated data (6 digits) 3: C Brand (1 digit) / Last accumulated data (6 digits) / Accumulation value (8 digits) 4: D Brand (1 digit) / Last accumulated data (6 digits) / OK (6 digits) 5: E Brand (1 digit) / Accumulation times (6 digits) / OK (6 digits) 6: F Brand (1 digit) / OK (6 digits) / Accumulation value (8 digits) 7: G Brand (1 digit) / Near zero (6 digits) / Full (6 digits) 8: OK (6 digits) / Over (5 digits) / Under (5 digits) 9: I Brand (1 digit) / OK (6 digits) / Free fall (6 digits) 10: JBrand (1 digit) / S1 (6 digits) / S2 (6 digits) 11: K Brand (1 digit) / S1 (6 digits) / S3 (6 digits) 12: L Brand (1 digit) / S1 (6 digits) / S4 (6 digits) 13: M Brand (1 digit) / S2 (6 digits) / S3 (6 digits) 14: N Brand (1 digit) / S2 (6 digits) / S4 (6 digits) 15: O Brand (1 digit) / S3 (6 digits) / S4 (6 digits) 16: P Brand (1 digit) / OK (6 digits) 17: Q Brand (1 digit) / Over (5 digits) / Under (5 digits) 18: R Brand (1 digit) / Accumulation times (6 digits) 19: S Brand (1 digit) / Accumulation value (10 digits) 20: T Brand (1 digit) / Last accumulated data (6 digits)
Brand setting target on comparator	70	20	0 ~ 7
Operation target on 4 steps comparator	70	21	0000 ~ 1111 (0 : Display interlock, 1 : Gross, 2 : Net) 10^0 digit : Operation target of comparator S1 10^1 digit : Operation target of comparator S2 10^3 digit : Operation target of comparator S3 10^4 digit : Operation target of comparator S4
Operation condition on 4-steps comparator	70	22	0000 ~ 1111 (0 :OFF, 1 : More than, 2 : Less than) 10^0 digit : Operation condition of comparator S1 10^1 digit : Operation condition of comparator S2 10^3 digit : Operation condition of comparator S3 10^4 digit : Operation condition of comparator S4
Operation condition on 4-steps comparator S0	70	23	0 : Always OFF 1 : On when both of S1 and S2 output are OFF 2 : On when both of S1 and S3 output are OFF 3 : On when both of S1 and S4 output are OFF 4 : On when both of S2 and S3 output are OFF 5 : On when both of S2 and S4 output are OFF 6 : On when both of S3 and S4 output are OFF 7 : On when (Gross weight) ≧ (Weighing capacity)
Comparator hysteresis operating conditions	70	24	0 : On delay, 1 : Off delay
Width of comparator hysteresis data	70	25	00 ~ 99 (Unit : 1D)
Width of comparator hysteresis time	70	26	00 ~ 99 (Unit : 0.1 s)

Please change [7*] of above mentioned command to [8*] about the command at the time of writing.

Item	Function No.	Number	Contents
BCD output operation mode	70	30	0 : Stream 1 : SYNC. WITH PRINT 2 : SYNC. WITH ACCUM 3 : SYNC. WITH FINISH
BCD output target	70	31	0 : Display interlock, 1 : Gross value, 2 : Net value, 3 : Tare weight value,4 : Accumulation total amount 5 : Accumulation frequency
BCD output logic	70	32	0000 ~ 1111 (0 : Negative logic, 1 : Positive logic) 10^0 digit : Data output logic (Weighing data and Decimal point) 10^1 digit : Porality logic 10^2 digit : Flag logic (ERROR, OVR, STABLE, GROSS) 10^3 digit : P.C. logic,
BCD P.C. (Print command)	70	33	0 : 125 ms, 1 : 25 ms, 2 : 5 ms
BCD output time	70	34	0 : 4 Times/s, 1 : 20 Times/s, 0 : 4 Times/s, 1 : 20 Times/s
S-I/F automatic print operation	70	37	0 : OFF, 1 : SYNC. WITH PRINT, 2 : SYNC. WITH ACCUM, 3 : SYNC. WITH FINISH
RS-232C operating mode	70	40	0 : Command mode, 1 : Stream 2 : SYNC. WITH PRINT, 3 : SYNC. WITH ACCUM 4 : SYNC. WITH FINISH
RS-232C output target	70	41	0 : Display interlock, 1 : Gross value, 2 : Net value 3 : Load display data with condition
RS-2332C/422/485 specification for communication	70	42	00000 ~ 15121 10^0 digit : Data bit length 0 : 7bit, 1 : 8bit 10^1 digit : Parity 0 : No parity, 1 : Even parity, 2 : Odd parity 10^2 digit : Stop bit 0 : 1bit, 1 : 2 bit 10^3 digit : Baud rate 0 : 1 200 bps, 1 : 2 400 bps, 2 : 4 800 bps, 3 : 9 600 bps, 4 : 19 200 bps, 5 : 38 400bps 10^4 digit : Terminator 0 : CR, 1 : CR+LF
RS-422/485 Address setting	70	43	00 ~ 31
Changeover of RS-422/485	70	44	0 : RS-422, 1 : RS-485
RS-485 reply data delay time	70	45	00 ~ 99 (Unit : 10 ms)
RS-232C/422/485 transmission data decimal point existence	70	46	0 : Nothing, 1 : Existing
Standard RS-485 operation	70	47	0: Command mode, 1: Modbus mode, 2: Stream mode, 3: Synchronizing with finish signal 4: Synchronizing with accumulation signal 5: Synchronizing with print signal
Output target of standard RS-485	70	48	0 : Display interlock, 1 : Gross, 2 : Net, 3 : Data of conditional displayed data,
Operation mode of RS-422/RS-485	70	49	0 : Command mode, 1 : Stream mode
Operation condition for accumulation function	70	50	000 ~ 121 10^0 digit : Accumulation command operation. 0 : only in stale, 1 : Always 10^1 digit : Automatic accumulating operation 0 : OFF, 1 : Synchronizing with finish, 2 : Automatic accumulation at stable 10^2 digit : Automatic accumulating condition 0 : Only in OK mode, 1: NO condition

- **Please change [7*] of above mentioned command to [8*] about the command at the time of writing.**
- **The items from [40] to [47] are only reading out because of the relative items.**

Item	Function No.	Number	Contents
Target of brand changeover	70	51	0: Changeover by function 1: Changeover by external control input 2: Changeover by communication
Brand number	70	52	0 ~ 7
Setting F key operation	70	55	0 : OFF, 1 : Print Input, 2: Hold Input, 3 : Batch start, 4 : Emergency stop, 5 : Zero clear, 6 : Tare clear, 7 : Accumulation clear, 8 : Measurement comparison, 9 : Forced batch finish
External control input INPUT1 operation setting	70	60	0: OFF 1: ON/OFF key operation 2: SET key operation 3: ACCUM. key operation 4: PRESET TARE key operation 5: TARE key operation 6: NET/GROSS key operation 7: ZERO key operation 8: F key operation 9: Zero clear 10: Tare clear 11: Flow start 12: Discharge start 13: Flow/Discharge changeover ON: Discharge, OFF: Flow 14: Clear the last accumulated data 15: Accumulation clear 16: Error cancellation 17: Print command 18: Hold 19: Emergency stop 20: Manual free fall compensation 21: Net display 22: Forced batch finish 23: Forced discharge finish 24: Accumulation clear for all brands 25: Brand No. 1 26: Brand No. 2 27: Brand No. 4
External control input INPUT2 operation setting	70	61	It is optional as well as F-60
External control input INPUT3 operation setting	70	62	It is optional as well as F-60
External control input INPUT4 operation setting	70	63	It is optional as well as F-60
External control input INPUT5 operation setting	70	64	It is optional as well as F-60
External control input INPUT6 operation setting	70	65	It is optional as well as F-60

Please change [7*] of above mentioned command to [8*] about the command at the time of writing.

Item	Function No.	Number	Contents
External control input INPUT7 operation setting	70	66	It is optional as well as F-60
External control input INPUT8 operation setting	70	67	It is optional as well as F-60.
External control input INPUT9 operation setting	70	68	It is optional as well as F-60.
External control output OUTPUT1 operation setting	70	70	00 : OFF, 01 : Stable, 02 : During canceling the Tare weight 03 : Display of Gross, 04 : Display of Net 05 : Center zero, 06 : During the hold, 07 : Error, 08 : Abnormal weight, 09 : Measuring sequence error, 10 : Z-Band, 11 : OK (S0), 12 : Full flow (S1) 13 : Medium flow (S2), 14 : Dribble flow (S3) 15 : Over (S4), 16 : Under, 17 : Full, 18 : During weighing, 19 : Finish weighing 20 : Discharge (between the discharge gate) 21 : Finish Discharge(between the discharge gate) 22 : RUN
Eternal control output OUTPUT2 operation setting	70	71	It is optional as well as F-70
Eternal control output OUTPUT3 operation setting	70	72	It is optional as well as F-70
Eternal control output OUTPUT4 operation setting	70	73	It is optional as well as F-70
Eternal control output OUTPUT5 operation setting	70	74	It is optional as well as F-70
Eternal control output OUTPUT6 operation setting	70	75	It is optional as well as F-70
Eternal control output OUTPUT7 operation setting	70	76	It is optional as well as F-70
Eternal control output OUTPUT8 operation setting	70	77	It is optional as well as F-70
Eternal control output OUTPUT9 operation setting	70	78	It is optional as well as F-70
Eternal control output OUTPUT10 operation setting	70	79	It is optional as well as F-70
Eternal control output OUTPUT11 operation setting	70	80	It is optional as well as F-70
Eternal control output OUTPUT12 operation setting	70	81	It is optional as well as F-70
Eternal control output OUTPUT13 operation setting	70	82	It is optional as well as F-70
CC-Link Occupied stations	70	84	0 : 1 station occupied, 1 : 2 station occupied, 2 : 4 station occupied
CC-Link Setting the station number	70	85	When F-84=0, 01 ~ 64 When F-84=1, 01 ~ 63 When F-84=2, 01 ~ 61
CC-Link Setting baud rate	70	86	0 : 156 kbps, 1 : 625 kbps, 2 : 2.5 Mbps, 3 : 5 Mbps, 4 : 10 Mbps
CC-Link 32 bits date format	70	87	0 : Standard binary format 1 : At minus, The most significant digit is fixed to [8].
Montanans days	70	90	Do not use here
Montanans No.	70	91	Do not use here

Please change [7*] of above mentioned command to [8*] about the command at the time of writing.

Item	Function No.	Number	Contents
Display position of decimal point.	71	01	0 : No decimal point, 1 : 1234.5, 2 : 123.45, 3 : 12.345, 4 : 1.2345
A/D sampling rate	71	02	0 : 20 times/s, 1 : 200 times/s
Condition of over display	71	03	0 : Bigger than |Weighing capacity ＋9D| 1 : Exceeding to weighing capacity ±110% 2 : Smaller than －20D and larger than weighing capacity ＋9D
unit	71	05	0 : No unit, 1 : g, 2 : kg, 3 : t, 4 : lb, 5 : N, 6 : kN
Bridge power supply	71	07	0 : DC 10V, 1 : DC 5V, 2 : DC 2.5V
Operating condition of zero set	71	10	0 : Operation when it is steady 1 : Operation by unconditional
Effective range of zero set	71	11	00 ~ 30 (Unit : ±1 % of weighing capacity)
Target of zero tracking	71	12	0 : Gross value and net value (for load display), 1 : Gross value (only at gross value display)
Date width of zero tracking	71	13	00 ~ 99 (Unit : 0.1 D)
Time width of zero tracking	71	14	00 ~ 99 (Unit : 0.1 s)
Operation of power on zero	71	15	0 : Invalid, 1 : Effective
Operating condition of tare weight cancellation	71	16	0 : Operation when it is steady and 0<GROSS ≦WEIGHING CAPACITY 1 : Operate unconditionally and 0<GROSS ≦WEIGHING CAPACITY 2 : Operation when it is steady and 0<GROSS ≦| WEIGHING CAPACITY | 3 : Operate unconditionally and 0<GROSS ≦| WEIGHING CAPACITY |
Date stored	71	17	0 : RAM, 1 : EEPROM
Power on clear	71	18	000 ~ 111 (0 : Invalid, 1 : Effective) 10^1 digit : Data of tare weight cancellation 10^2 digit : Data of preset tare weight cancellation 10^3 digit : Data of zero set and zero tracking
Method of setting gravity acceleration compensation	71	25	0 : Set the district number 1 : Set the numerical value of gravity acceleration
District number of using place	71	26	01 ~ 16 (Unit : District)
District number of calibration place	71	27	01 ~ 16 (Unit : District)
Gravity acceleration value setting of using place	71	28	9.000 ~ 9.999 (Unit : m/s2)
Gravity acceleration value setting of calibration place	71	29	9.000 ~ 9.999 (Unit : m/s2)
Range switch operation	71	40	0 : Range change OFF, 1 : Changeable two ranges 2 : Changeable three ranges
Setting of scale interval of the second rang	71	41	0 : 1 scale interval, 1 : 2 scale interval, 2 : 5 scale interval, 3 : 10 scale interval, 4 : 20 scale interval, 5 : 50 scale interval
Boundary value setting in the second range	71	42	000000 ~ 999999
Setting of scale interval of the third rang	71	43	0 : 1 scale interval, 1 : 2 scale interval, 2 : 5 scale interval, 3 : 10 scale interval, 4 : 20 scale interval, 5 : 50 scale interval
Boundary value setting in the third range	71	44	000000 ~ 999999

・The command of writing is changing the upper commands [7*] to [8*].
・When calibration lock is valid, only reading is possible as for the item of command [71].

Item	Function No.	Number	Contents
Analog output target	71	70	0 : Display interlock, 1 : Gross value, 2 : Net value
Display value at the analog output of DC4 mA(DC0 V)	71	71	-999999 ~ 999999
Display value at the analog output of DC20 mA(DC10 V)	71	72	-999999 ~ 999999
Calibration data of the scale interval (Reference use)	71	90	0 : 1 scale interval, 1 : 2 scale interval, 2 : 5 scale interval, 3 : 10 scale interval, 4 : 20 scale interval, 5 : 50 scale interval
Calibration data of the weighing capacity (Reference use)	71	91	000000 ~ 999999
Calibration data of the weight (Reference use)	71	92	000000 ~ 999999
Calibration data of zero mV/V (Reference use)	71	93	-3.1000 ~ 3.1000 (Unit : 0.00001mV/V)
Calibration data of span mV/V (Reference use)	71	94	0.00001 ~ 3.1000 (Unit : 0.00001mV/V)
Stability detection time width at calibration	71	97	00 ~ 99 (Unit : 0.1 s)

- **The command of writing is changing the upper commands [7*] to [8*].**
- **The data setting value [90] to [97] is reading out only, because they are relatively contents of calibration.**

Item	Function No.	Number	Contents
Weighing mode	72	01	0 : Simple comparison mode 1 : Sequential mode 2 : 4 steps comparator mode 1 3 : 4 steps comparator mode 2
Control mode	72	02	0 : Batch mode, 1 : Discharge mode, 2 : External input changeover
Comparison signal operation	72	05	0 : ANYTIME, 1 : IN STABLE MODE, 2 : SYNC. WITH BATCH FIN, 3 : BATCH FIN.+HOLD
Near zero comparison operation	72	06	0 : Gross, 1 : Net, 2 : OFF, 3 : |Gross|, 4 : |Net|
Full comparative operation	72	07	0 : Gross, 1 : Net, 2 : OFF, 3 : |Gross|, 4 : |Net|
Batch Monitoring Timer	72	10	0000 ~ 9999 (Unit : 1 s)
Start above near zero at the time of batch start	72	15	0 : Invalid, 1 : Effective
Automatic tare at the time of batch start	72	16	0 : Invalid, 1 : Effective
Batch start delay timer	72	17	0000 ~ 9999 (Unit : 1 s)
Automatic tare after batch start delay timer	72	18	0 : Invalid, 1 : Effective
F-flow compare stop timer	72	20	0000 ~ 9999 (Unit : 0.01 s)
M-flow compare stop timer	72	21	0000 ~ 9999 (Unit : 0.01 s)
D-flow compare stop timer	72	22	0000 ~ 9999 (Unit : 0.01 s)
Automatic free fall compensation	72	25	0 : Invalid, 1 : Effective
Width for the automatic free fall compensation	72	26	00000 ~ 99999 (Unit : 1D)

The command of writing is changing the upper commands [7*] to [8*].

Item	Function No.	Number	Contents
Judge condition	72	30	0 : Timer is up 1 : Stable and timer is up 2 : Stable or timer is up
Waiting time for judge	72	31	0000 ~ 9999 (Unit : 0.01 s)
Maximum time of compensation flow	72	35	000 ~ 255 (Unit : 1 time)
Judge condition after compensation flow	72	36	0 : Timer is up 1 : Stable and timer is up 2 : Stable or timer is up
Compensation flow time	72	37	0000 ~ 9999 (Unit : 0.01 s)
Waiting time for judge after compensation flow	72	38	0000 ~ 9999 (Unit : 0.01 s)
Output time for the Batch finish signal	72	40	0000 ~ 9999 (Unit : 0.01 s)
Batch finish output OFF	72	41	0 : No condition 1 : OL or unstable 2 : Near zero
Discharge start at the time batch finish	72	45	0 : Invalid, 1 : Effective
Discharge monitor timer	72	46	0000 ~ 9999 (Unit : 0.01 s)
Discharge gate close delay time	72	47	0000 ~ 9999 (Unit : 0.01 s)
Discharge finish output time	72	48	0000 ~ 9999 (Unit : 0.01 s)
Tare cancellation at the time of discharge finish	72	49	0 : Invalid, 1 : Effective

The command of writing is changing the upper commands [7*] to [8*].

(13) Communication error processing

This unit returns the error command to the host side when the communication error or the execution error occurs.

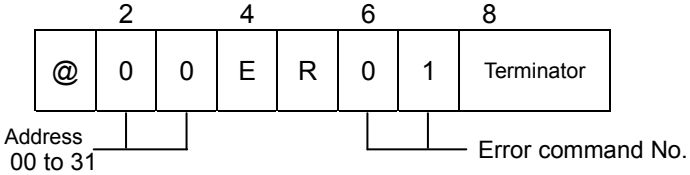

Error command No.	Contents	Remarks
01	Non-executable error	In the calibration mode, the function mode or the check mode.
02	Other errors by convenience of this unit	When the receiving command cannot be executed.
10	Parity error	At the parity detection error.
11	Fleming error	At the stop bit detection error.
12	Over run error	At the receiving command reading error.
13	Data code and data lengthy error	When neither the received data code nor data length is corresponding.
14	No pertinent command	When the receiving command is not corresponding.
20	Error display of the zero calibration	When the load cell output voltage is -2.5 mV/V or less.
21	Error display of the zero calibration	When the load cell output voltage is 2.5 mV/V or more.
22	Error display of the span calibration	When the difference of the load cell output voltage between span point and zero point is 0.0 mV/V or less.
23	Error display of the span calibration	When the load cell output voltage is 3.1 mV/V or more.

- **The error command is not replied when Address and the completion code (terminator) cannot be detected.**
- **Please consider dealing on the host side when the communication error command is returned from this instrument.**

16-3-13. Data format synchronizing with data format in Stream mode

- **The load data enters from the right.**
- **The sign of [－] for minus and [＋] for plus is entered.**
- **The load data performs zero suppress.**
- **The decimal point adheres to a specified position when the decimal point is set with F-46 and when decimal point is specified with CF-01.**
- **[OL] is appeared in the load data section at the over load.**
- **The empty sections are all spaces.**

(1) When the setting by function F-41 (RS-232C/422/485) or function F-48 (standard RS-485) is set as [Display interlock], [GROSS] and [NET]

Return (CSD-903 → Host)

2	4		6		8		10		12		14		
@	0	0	9	9									Terminator

Command No. — Sign of Load data — Load data

2	4		6		8		10		12		14		
@	0	0	9	9	—						1	2	3	Terminator

2	4		6		8		10		12		14		
@	0	0	9	9	＋			0	.	1	2	3	Terminator

2	4		6		8		10		12		14		
@	0	0	9	9	＋					O	L		Terminator

2	4		6		8		10		12		14		
@	0	0	9	9	—					O	L		Terminator

(2) When the setting of function F-41 (RS-232C/422/485) or function F-48 (standard RS-485) is set as [Conditional load display data]

2	4		6		8		10		12		14		16		
C1	C2	,	C3	C4	,	C5	C6	C7	C8	C9	C10	C11	C12	C13	C14	C15	Terminator

Header 1 — Header 2 — Sign — Load data 8 digits — Unit

Header 1			Header 2			Sign		Load data 8 digits								Unit		
C1	C2	Contents	C3	C4	Contents	C5	Contents	C6	C7	C8	C9	C10	C11	C12	C13	C14	C15	Contents
O	L	Overload	N	T	Net	＋	Plus						1	2	3		g	glam
S	T	Stable	G	S	Gross	－	Minus				0	.	1	2	3	k	g	Kilo-gram
U	S	Unstable											O	L			t	ton
																l	b	Pound
																	N	Newton
																k	N	Kilo-Newton

16-3-14. Data format communication calibration

- **The address becomes [00] fixation for the RS-232C interface.**
- **The load data enters from the right.**
- **The sign of [-] for minus and [+] for plus is entered.**
- **The load data performs zero suppress.**
- **The decimal point adheres to a specified position when the decimal point is set with F-46 and when decimal point is specified with CF-01.**
- **[OL] is appeared in the load data section at the over load. [-OL] is appeared in the load data section at the condition of gross value is minus.**
- **The empty sections are all spaces.**
- **When the calibration LOCK is at the effective, the communication calibration is cannot.**

Please process the setting of the calibration by the communication according to the following flow chart.

Each item of the flow chart supports the item of Clause 4-3.

Please refer to Clause 4-3 as for the details.

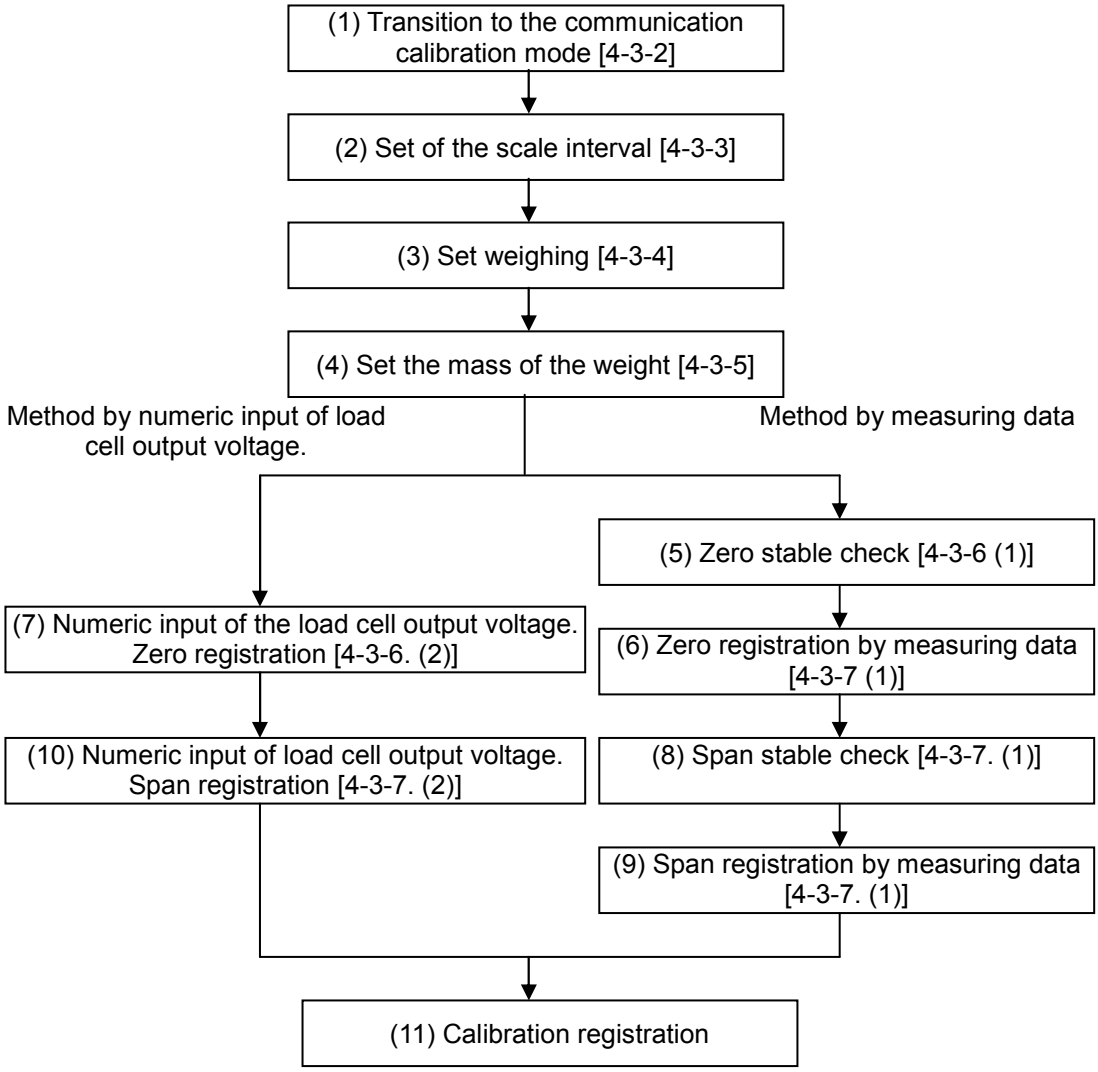

- **CSD-903 displays [-rS-] (-RS-) during the calibration by communication.**
- **When the calibration forced finish is executed, all the calibration registration is not executed, and returned to the condition before calibration.**
- **In the case calibration by the registration of the measurement value, please register itself after having confirmed stability by stable confirmation by all means.**

(1) Shift to the communication calibration mode. (Host → CSD-903)

2	4	6	8	10	12	14	16	
@ 0 0	9 0	0 1						Terminator

Address 00 to 31 — Command No. — Number — Space

At normal operation
Return (CSD-903 → Host)

2	4	6	8	10	12	14	16	
@ 0 0	9 0	0 1						Terminator

Address 00 to 31 — Command No. — Sign — Space

At abnormal operation
Return (CSD-903 → Host)

2	4	6	8	
@ 0 0	E R	1 3		Terminator

Address 00 to 31

Effective calibration LOCK
Return (CSD-903 → Host)

2	4	6	8	
@ 0 0	E R	0 2		Terminator

Address 00 to 31

(2) Set of the scale interval (Host → CSD-903)

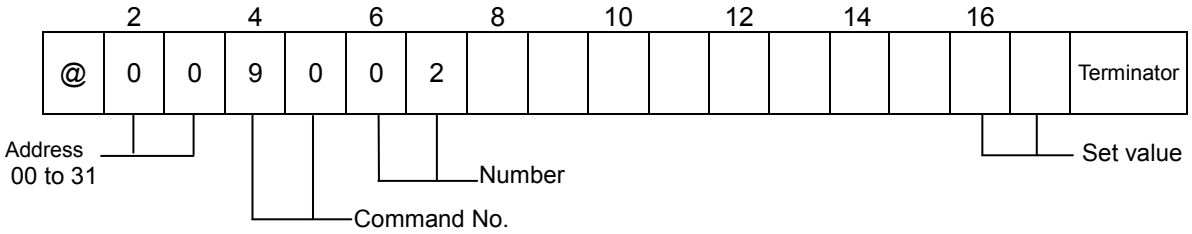

At normal operation

Return (CSD-903 → Host)

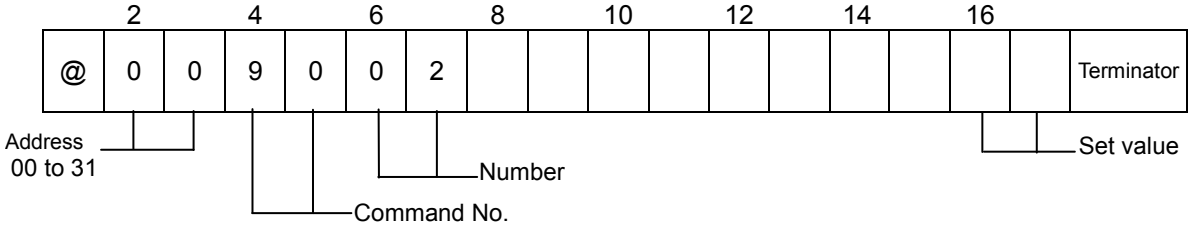

At abnormal operation

Return (CSD-903 → Host)

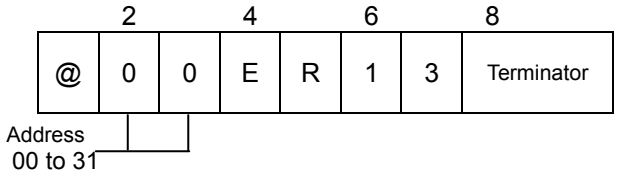

(3) Set weighing capacity (Host → CSD-903)

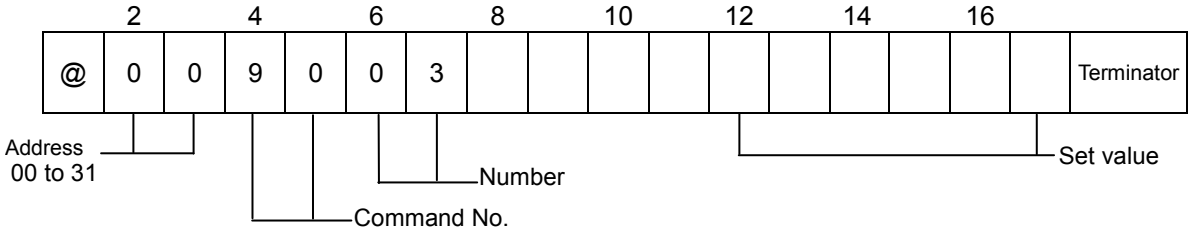

At normal operation

Return (CSD-903 → Host)

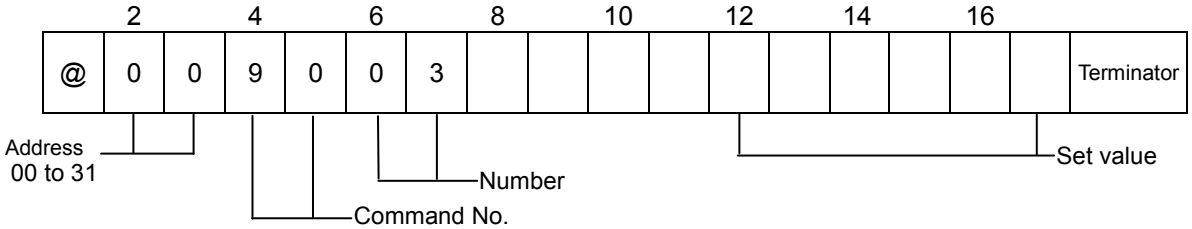

At abnormal operation

Return (CSD-903 → Host)

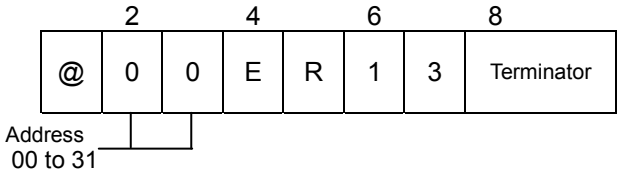

(4) Set the mass of the weight. (Host → CSD-903)

2	4	6	8	10	12	14	16	
@ 0 0	9 0	0 4						Terminator

Address 00 to 31 — Command No. — Number — Set value

At normal operation

Return (CSD-903 → Host)

2	4	6	8	10	12	14	16	
@ 0 0	9 0	0 4						Terminator

Address 00 to 31 — Command No. — Number — Set value

At abnormal operation

Return (CSD-903 → Host)

2	4	6	8	
@ 0 0	E R	1 3		Terminator

Address 00 to 31

(5) Zero point stable check (Host → CSD-903)

2	4	6	8	10	12	14	16	
@ 0 0	9 0	0 6						Terminator

Address 00 to 31 — Command No. — Number

Stable

Return (CSD-903 → Host)

2	4	6	8	10	12	14	16	
@ 0 0	9 0	0 6					1	Terminator

Address 00 to 31 — Command No. — Number

Unstable

Return (CSD-903 → Host)

2	4	6	8	10	12	14	16	
@ 0 0	9 0	0 6					0	Terminator

Address 00 to 31 — Command No. — Number

(6) Zero point registration by the measuring data (Host → CSD-903)

	2		4		6		8		10		12		14		16		
@	0	0	9	0	0	7											Terminator

Address 00 to 31

Number

Command No.

At normal operation

Return (CSD-903 → Host

	2		4		6		8		10		12		14		16		
@	0	0	9	0	0	7											Terminator

Address 00 to 31

Number

Command No.

At abnormal operation

Return (CSD-903 → Host)

	2		4		6		8
@	0	0	E	R	2	0	Terminator

Address 00 to 31

	2		4		6		8
@	0	0	E	R	2	1	Terminator

Address 00 to 31

(7) Numeric input of the load cell output voltage zero point registration. (Host → CSD-903)

1) Input of setting for the forth decimal point digit.

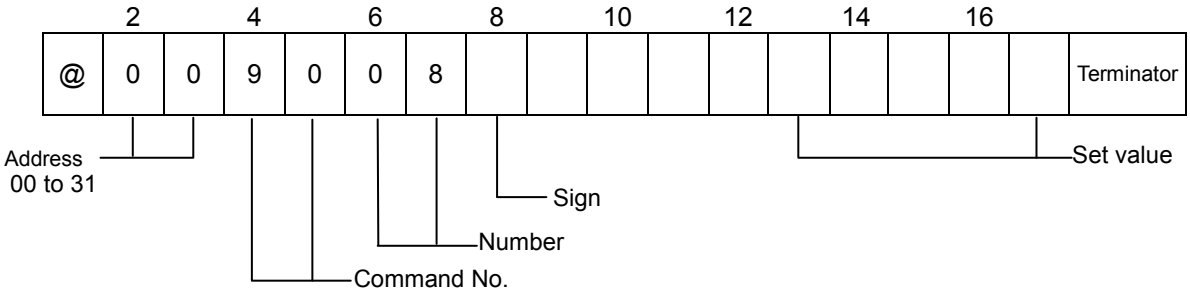

At normal operation

Return (CSD-903 → Host)

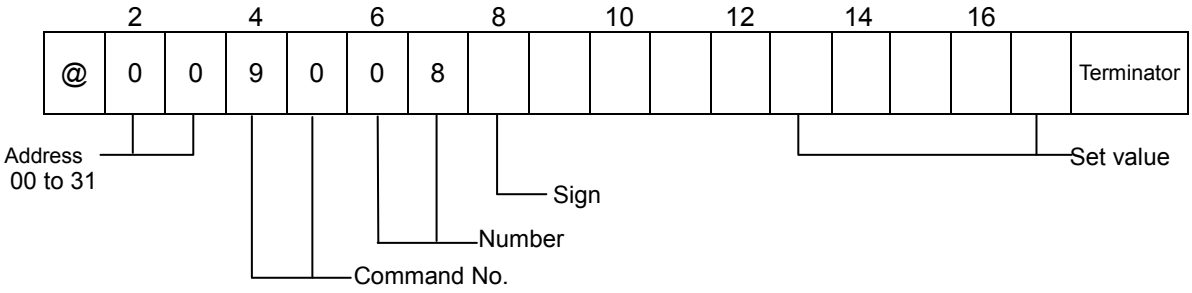

This is the input of the forth decimal point digit.
(ex) Input data=10001 ⇒1.0001mV/V

2) Input of setting for the fifth decimal point digit.

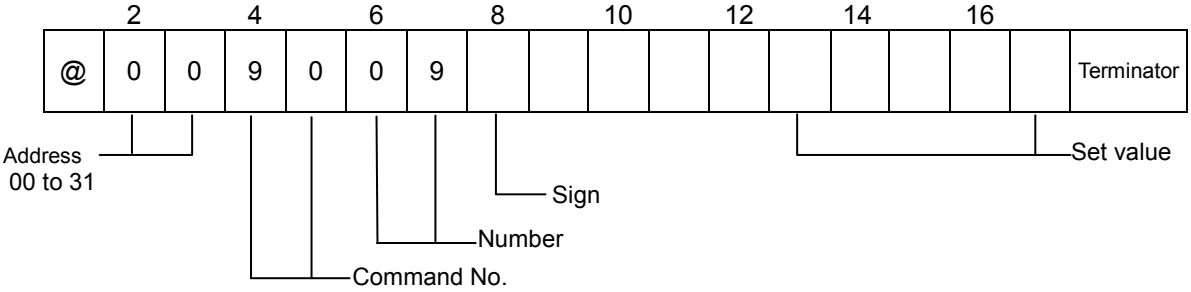

At normal operation

Return (CSD-903 → Host)

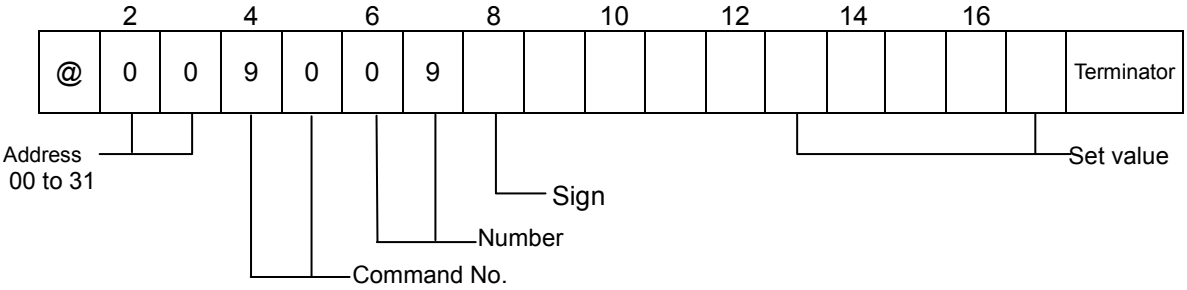

This is the input of the fifth decimal point digit.
(ex) Input data = 100001 ⇒1.00001mV/V

At abnormal operation

Return (CSD-903 → Host)

2	4	6	8
@	0	0	E	R	2	0	Terminator

Address 00 to 31

2	4	6	8
@	0	0	E	R	2	1	Terminator

Address 00 to 31

- **The command that registers mV/V of five digits below the decimal point for ZERO (No.09) and SPAN (No.12) aiming at the performance gain of the calibration is added since ROM Ver. 2.300.**
  When you use the command that newly registers mV/V of ZERO and SPAN, please use the command that registers mV/V of five digits below the decimal point for ZERO (No.9) and SPAN (No.12)
- **When this instrument is built into the system that has already used mV/V of four digits below the decimal point for ZERO (No.08) and SPAN (No.11), you can use the command as it is.**
  Please note the mistake of the set digit number when changing to the command of five digits below the decimal point by registering mV/V of ZERO (No.9) and SPAN (No.12).

(8) Span stable check (Host → CSD-903)

2	4	6	8	10	12	14	16	
@	0	0	9	0	0	6										Terminator

Address 00 to 31

Number

Command No.

Stable

Return (CSD-903 → Host)

2	4	6	8	10	12	14	16	
@	0	0	9	0	0	6									1	Terminator

Address 00 to 31

Number

Command No.

Unstable

Return (CSD-903 → Host)

2	4	6	8	10	12	14	16	
@	0	0	9	0	0	6									0	Terminator

Address 00 to 31

Number

Command No.

(9) Span registration by the measuring data (Host → CSD-903)

2	4	6	8	10	12	14	16	
@ 0 0	9 0	1 0						Terminator

Address 00 to 31
Number
Command No.

At normal operation
Return (CSD-903 → Host)

2	4	6	8	10	12	14	16	
@ 0 0	9 0	1 0						Terminator

Address 00 to 31
Number
Command No.

At abnormal operation
Return (CSD-903 → Host)

2	4	6	8
@ 0 0	E R	2 2	Terminator

Address 00 to 31

2	4	6	8
@ 0 0	E R	2 3	Terminator

Address 00 to 31

(10) Numeric input of the load cell output voltage Span point registration (Host → CSD-903)

3) Input of setting for the forth decimal point digit

2	4	6	8	10	12	14	16	
@ 0 0	9 0	1 1						Terminator

Address 00 to 31
Sign
Setting value
Number
Command No.

At normal operation
Return (CSD-903 → Host)

2	4	6	8	10	12	14	16	
@ 0 0	9 0	1 1						Terminator

Address 00 to 31
Sign
Setting value
Number
Command No.

This is the input of the forth decimal point digit.
(ex) Input data = 10001 ⇒1.0001mV/V

4) Input of setting for the fifth decimal point digit

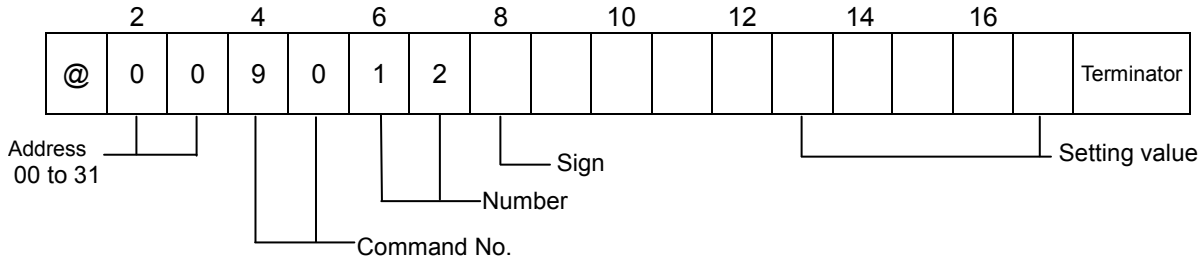

At normal operation

Return (CSD-903 → Host)

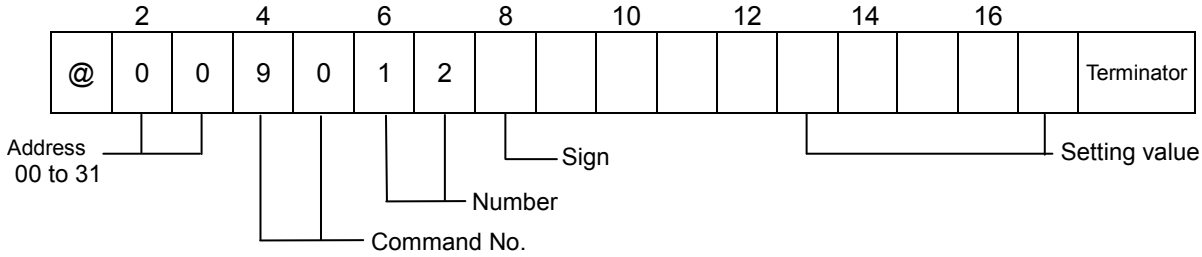

This is the input of the fifth decimal point digit.
(ex) Input data = 100001 ⇒1.00001mV/V

At abnormal operation

Return (CSD-903 → Host)

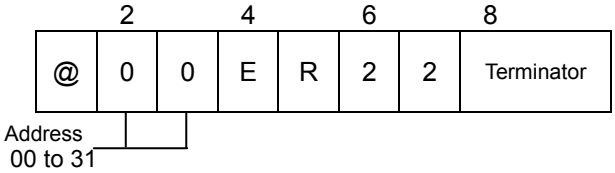

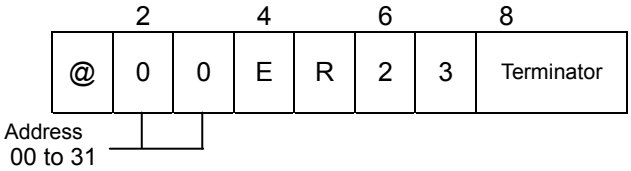

- **The command that registers mV/V of five digits below the decimal point for ZERO (No.09) and SPAN (No.12) aiming at the performance gain of the calibration is added since ROM Ver. 2.300.**
  When you use the command that newly registers mV/V of ZERO and SPAN, please use the command that registers mV/V of five digits below the decimal point for ZERO (No.9) and SPAN (No.12)
- **When this instrument is built into the system that has already used mV/V of four digits below the decimal point for ZERO (No.08) and SPAN (No.11), you can use the command as it is.**
  Please note the mistake of the set digit number when changing to the command of five digits below the decimal point by registering mV/V of ZERO (No.9) and SPAN (No.12).

(11) Calibration registration (Host → CSD-903)

2	4	6	8	10	12	14	16	
@ 0 0	9 0	9 9						Terminator

Address 00 to 31

Number

Command No.

At normal operation

Return (CSD-903 → Host)

2	4	6	8	10	12	14	16	
@ 0 0	9 0	9 9						Terminator

Address 00 to 31

Number

Command No.

At abnormal operation

Return (CSD-903 → Host)

2	4	6	8
@ 0 0	E R	1 3	Terminator

Address 00 to 31

(12) Calibration forced finish is executed (Host → CSD-903)

2	4	6	8	10	12	14	16	
@ 0 0	9 0	0 0						Terminator

Address 00 to 31

Number

Command No.

At normal operation

Return (CSD-903 → Host)

2	4	6	8	10	12	14	16	
@ 0 0	9 0	0 0						Terminator

Address 00 to 31

Number

Command No.

At abnormal operation

Return (CSD-903 → Host)

2	4	6	8
@ 0 0	E R	1 3	Terminator

Address 00 to 31

17. Trouble shooting

When abnormal point(s) is/are found during the operation of the instrument, check by the following procedures.

However, when you can't find applicable item nor solve the symptom of trouble even after you have taken some measures, contact with our.

17-1. Execute trouble shooting

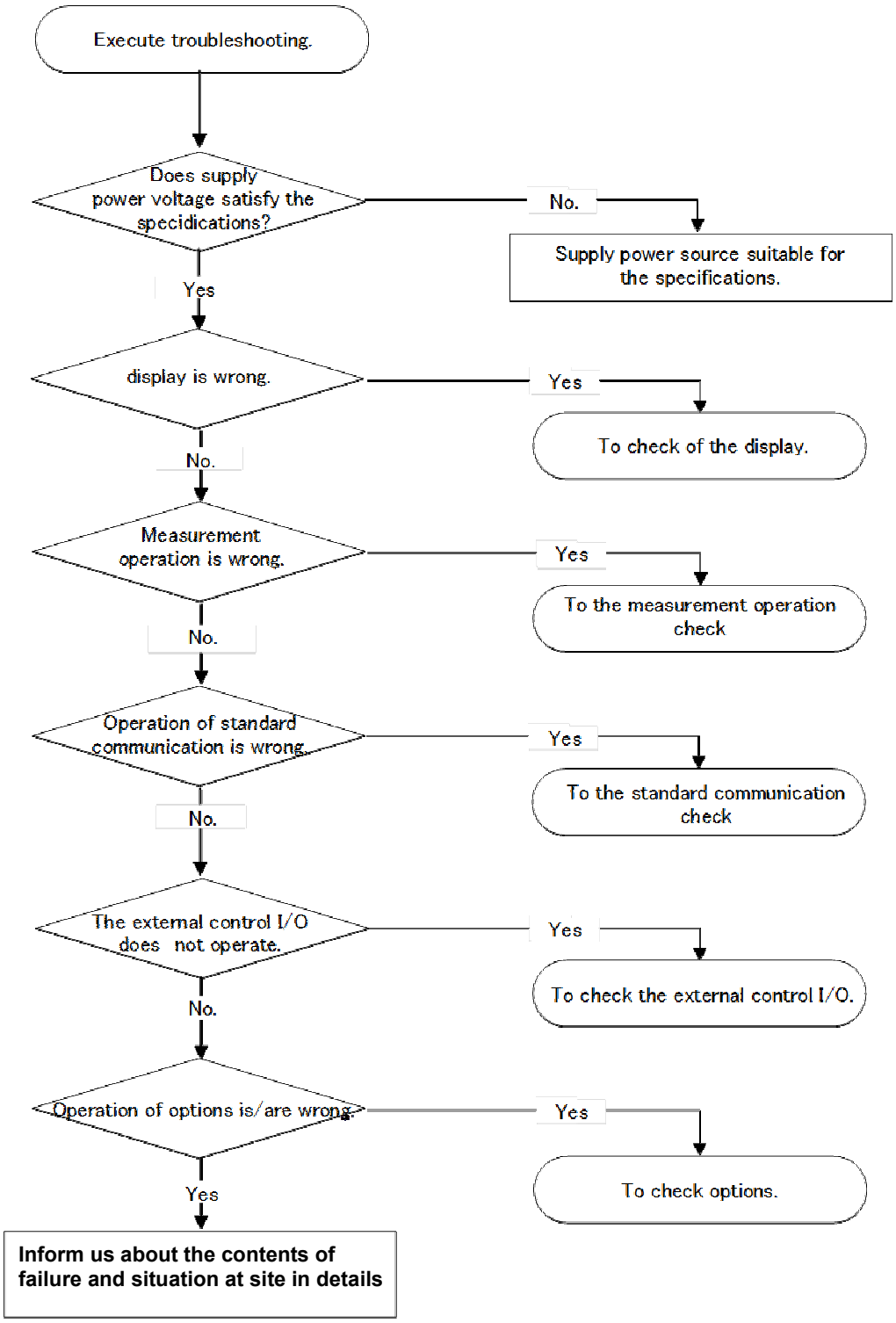

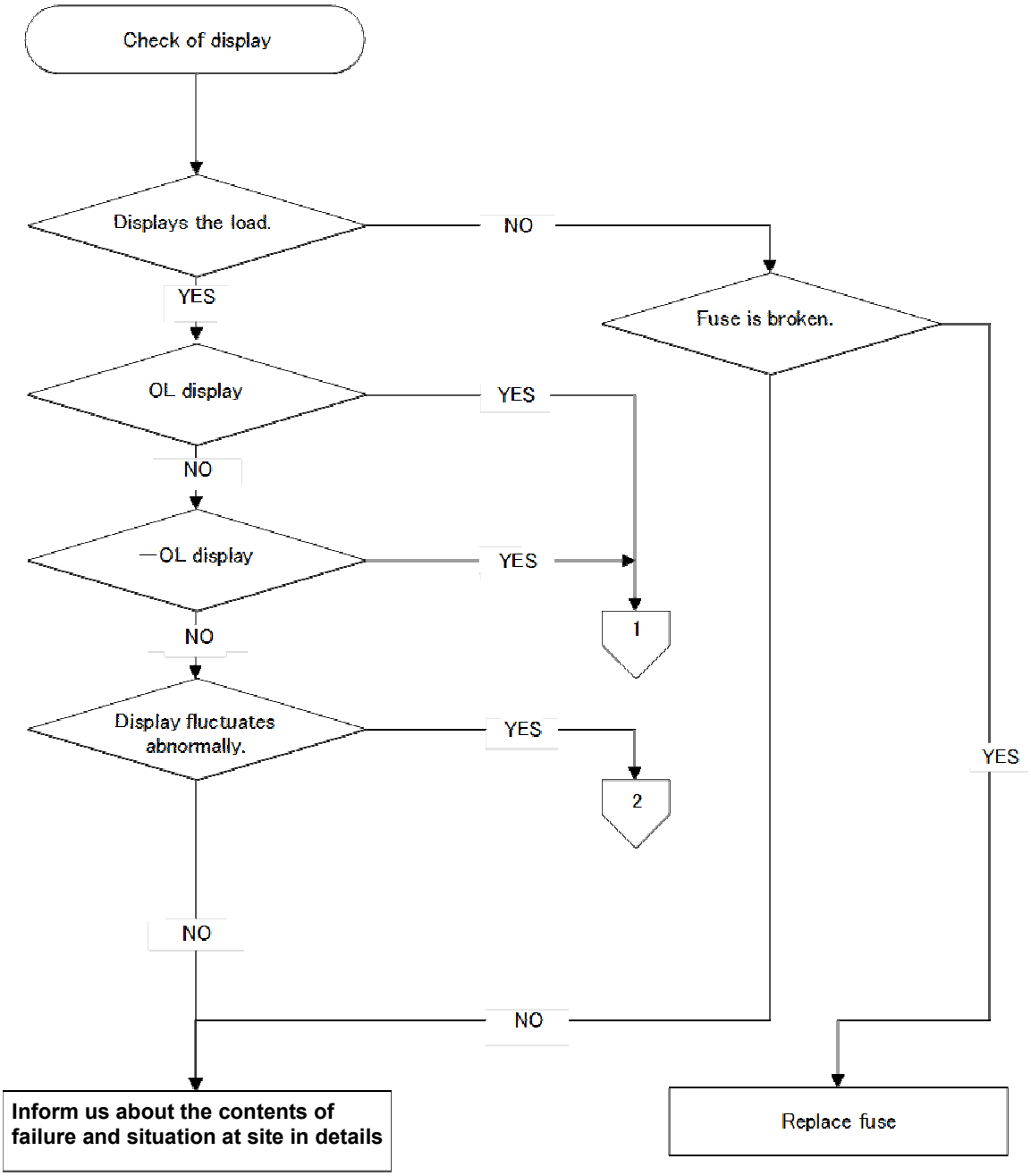
Check of display
Displays the load.
NO
YES
Fuse is broken.
OL display
YES
NO
—OL display
YES
1
NO
Display fluctuates abnormally.
YES
2
YES
NO
NO
Inform us about the contents of failure and situation at site in details
Replace fuse

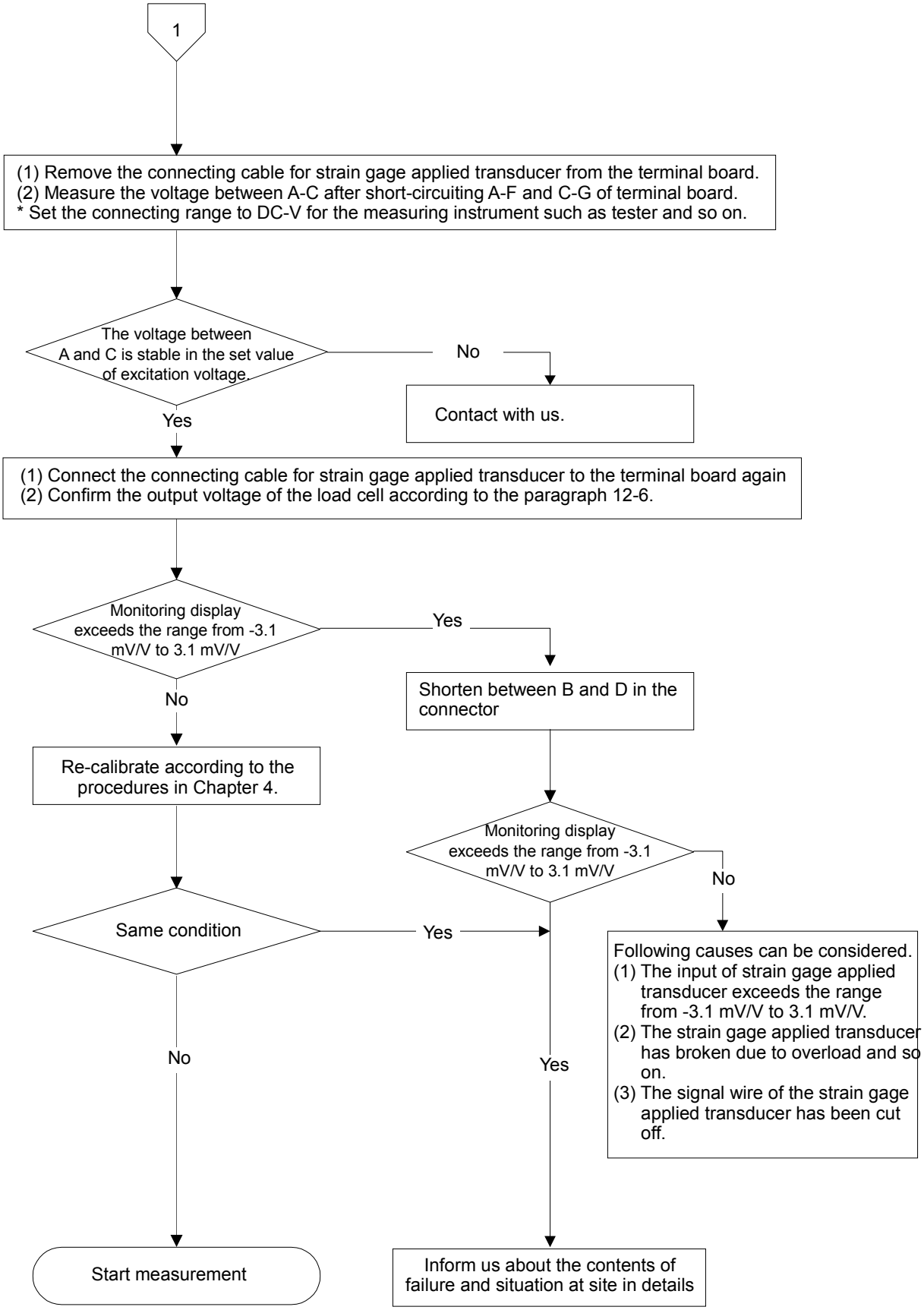
1
(1) Remove the connecting cable for strain gage applied transducer from the terminal board.
(2) Measure the voltage between A-C after short-circuiting A-F and C-G of terminal board.
* Set the connecting range to DC-V for the measuring instrument such as tester and so on.
The voltage between A and C is stable in the set value of excitation voltage.
No
Contact with us.
Yes
(1) Connect the connecting cable for strain gage applied transducer to the terminal board again
(2) Confirm the output voltage of the load cell according to the paragraph 12-6.
Monitoring display exceeds the range from -3.1 mV/V to 3.1 mV/V
Yes
Shorten between B and D in the connector
No
Re-calibrate according to the procedures in Chapter 4.
Monitoring display exceeds the range from -3.1 mV/V to 3.1 mV/V
No
Same condition
Yes
Following causes can be considered.
(1) The input of strain gage applied transducer exceeds the range from -3.1 mV/V to 3.1 mV/V.
(2) The strain gage applied transducer has broken due to overload and so on.
(3) The signal wire of the strain gage applied transducer has been cut off.
No
Yes
Start measurement
Inform us about the contents of failure and situation at site in details

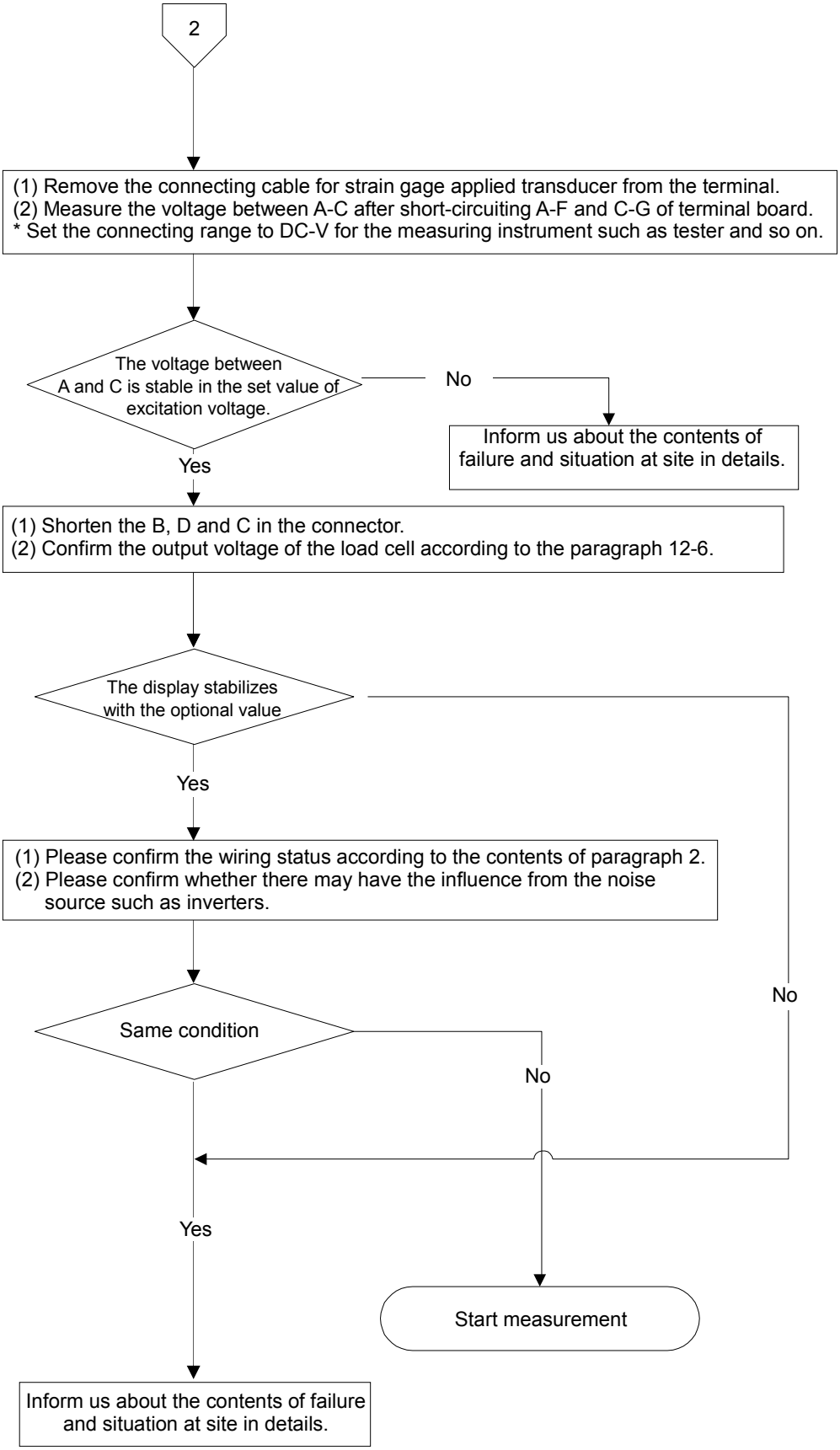
2
(1) Remove the connecting cable for strain gage applied transducer from the terminal.
(2) Measure the voltage between A-C after short-circuiting A-F and C-G of terminal board.
* Set the connecting range to DC-V for the measuring instrument such as tester and so on.
The voltage between A and C is stable in the set value of excitation voltage.
No
Inform us about the contents of failure and situation at site in details.
Yes
(1) Shorten the B, D and C in the connector.
(2) Confirm the output voltage of the load cell according to the paragraph 12-6.
The display stabilizes with the optional value
No
Yes
(1) Please confirm the wiring status according to the contents of paragraph 2.
(2) Please confirm whether there may have the influence from the noise source such as inverters.
Same condition
No
Yes
Start measurement
Inform us about the contents of failure and situation at site in details.

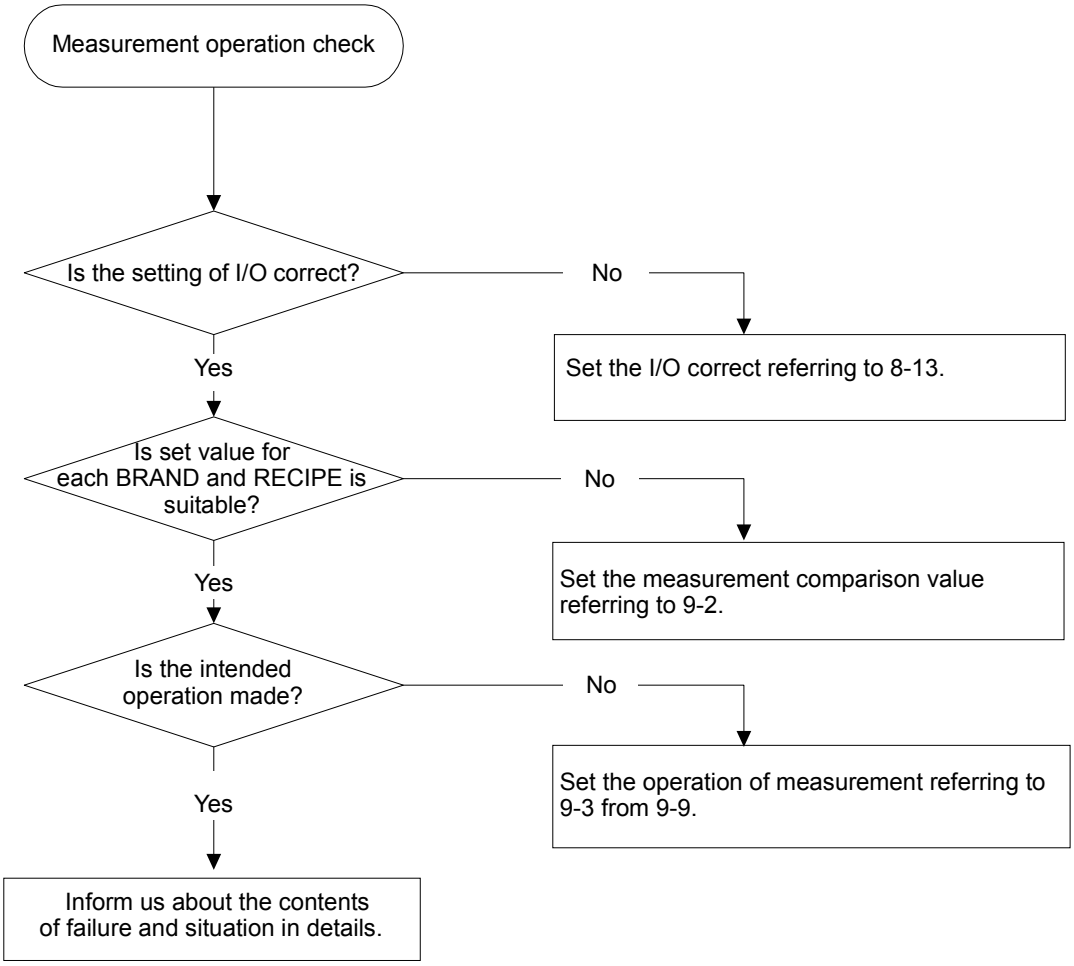
Measurement operation check
Is the setting of I/O correct?
No
Set the I/O correct referring to 8-13.
Yes
Is set value for each BRAND and RECIPE is suitable?
No
Set the measurement comparison value referring to 9-2.
Yes
Is the intended operation made?
No
Set the operation of measurement referring to 9-3 from 9-9.
Yes
Inform us about the contents of failure and situation in details.

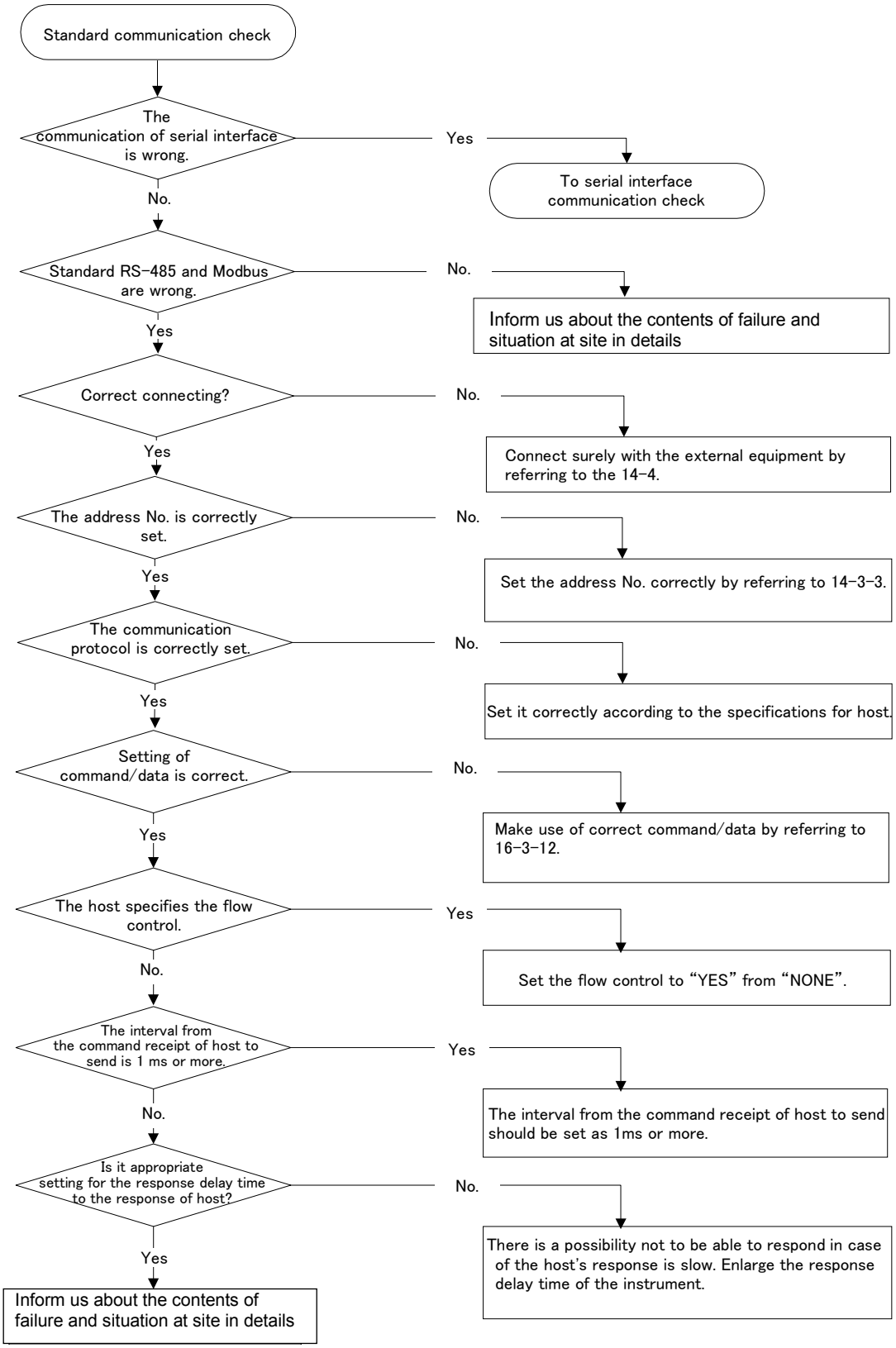
Standard communication check
The communication of serial interface is wrong.
Yes
To serial interface communication check
No.
Standard RS-485 and Modbus are wrong.
No.
Inform us about the contents of failure and situation at site in details
Yes
Correct connecting?
No.
Connect surely with the external equipment by referring to the 14-4.
Yes
The address No. is correctly set.
No.
Set the address No. correctly by referring to 14-3-3.
Yes
The communication protocol is correctly set.
No.
Set it correctly according to the specifications for host.
Yes
Setting of command/data is correct.
No.
Make use of correct command/data by referring to 16-3-12.
Yes
The host specifies the flow control.
Yes
Set the flow control to "YES" from "NONE".
No.
The interval from the command receipt of host to send is 1 ms or more.
Yes
The interval from the command receipt of host to send should be set as 1ms or more.
No.
Is it appropriate setting for the response delay time to the response of host?
No.
There is a possibility not to be able to respond in case of the host's response is slow. Enlarge the response delay time of the instrument.
Yes
Inform us about the contents of failure and situation at site in details

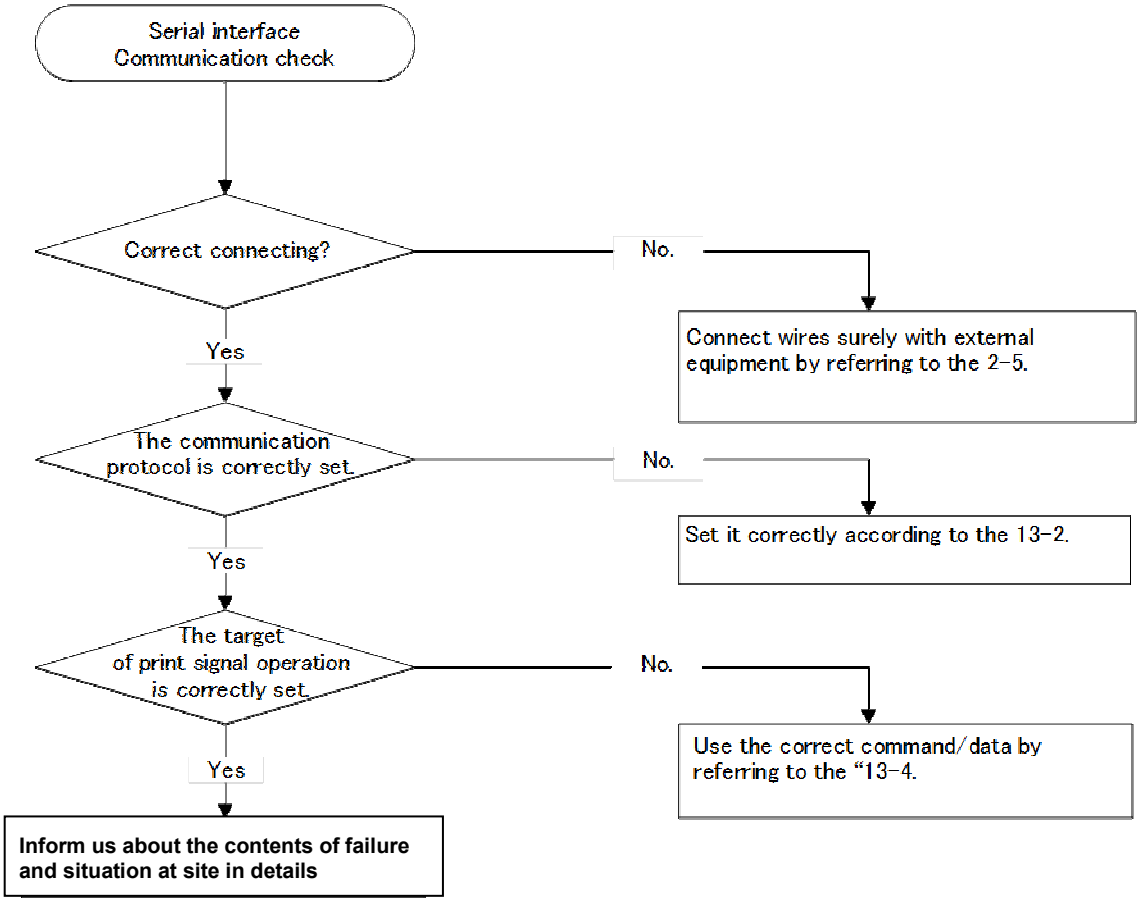
Serial interface
Communication check
Correct connecting?
No.
Connect wires surely with external equipment by referring to the 2-5.
Yes
The communication protocol is correctly set.
No.
Set it correctly according to the 13-2.
Yes
The target of print signal operation is correctly set.
No.
Use the correct command/data by referring to the "13-4.
Yes
Inform us about the contents of failure and situation at site in details

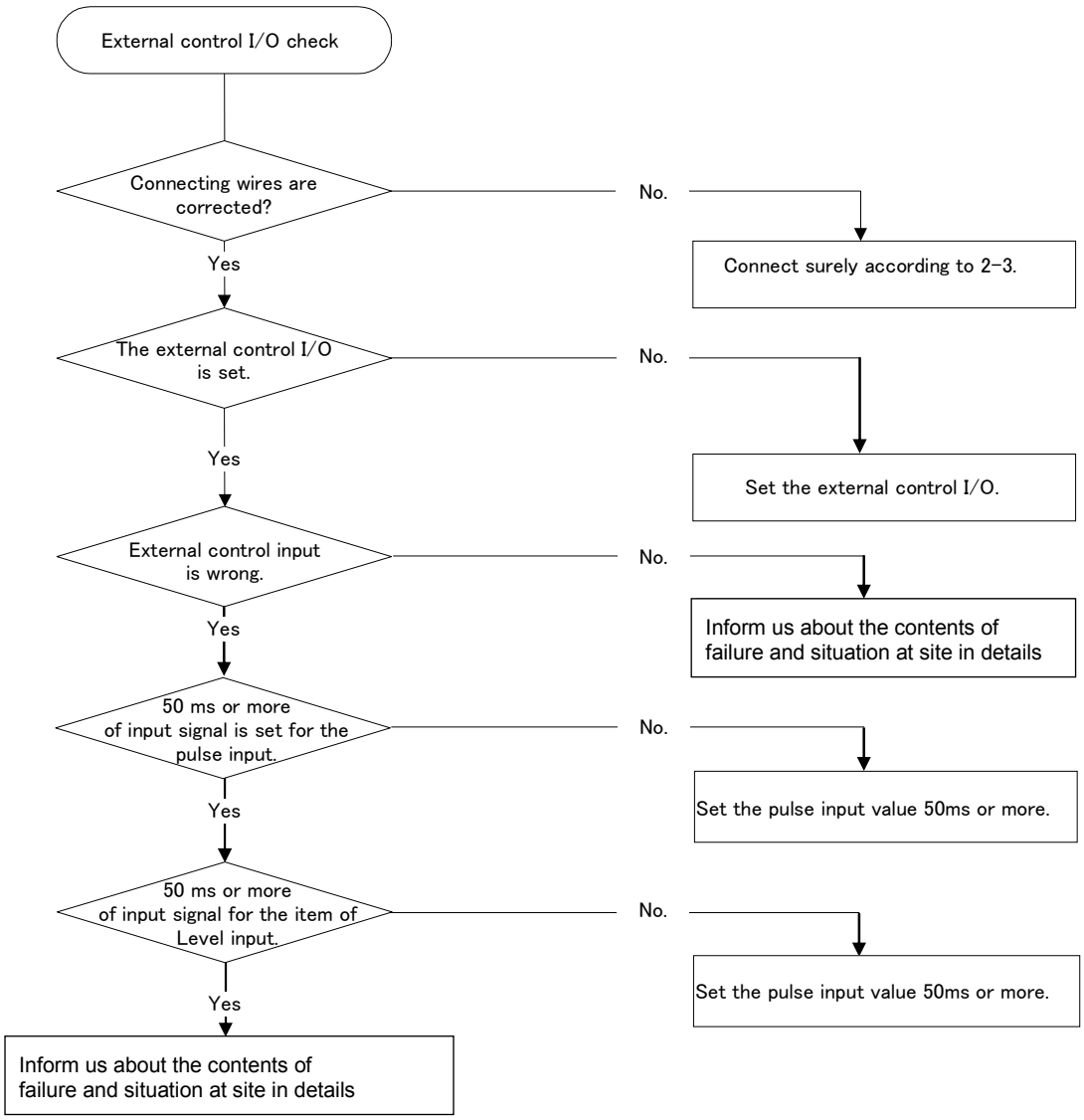
External control I/O check
Connecting wires are corrected?
No.
Connect surely according to 2-3.
Yes
The external control I/O is set.
No.
Set the external control I/O.
Yes
External control input is wrong.
No.
Inform us about the contents of failure and situation at site in details
Yes
50 ms or more of input signal is set for the pulse input.
No.
Set the pulse input value 50ms or more.
Yes
50 ms or more of input signal for the item of Level input.
No.
Set the pulse input value 50ms or more.
Yes
Inform us about the contents of failure and situation at site in details

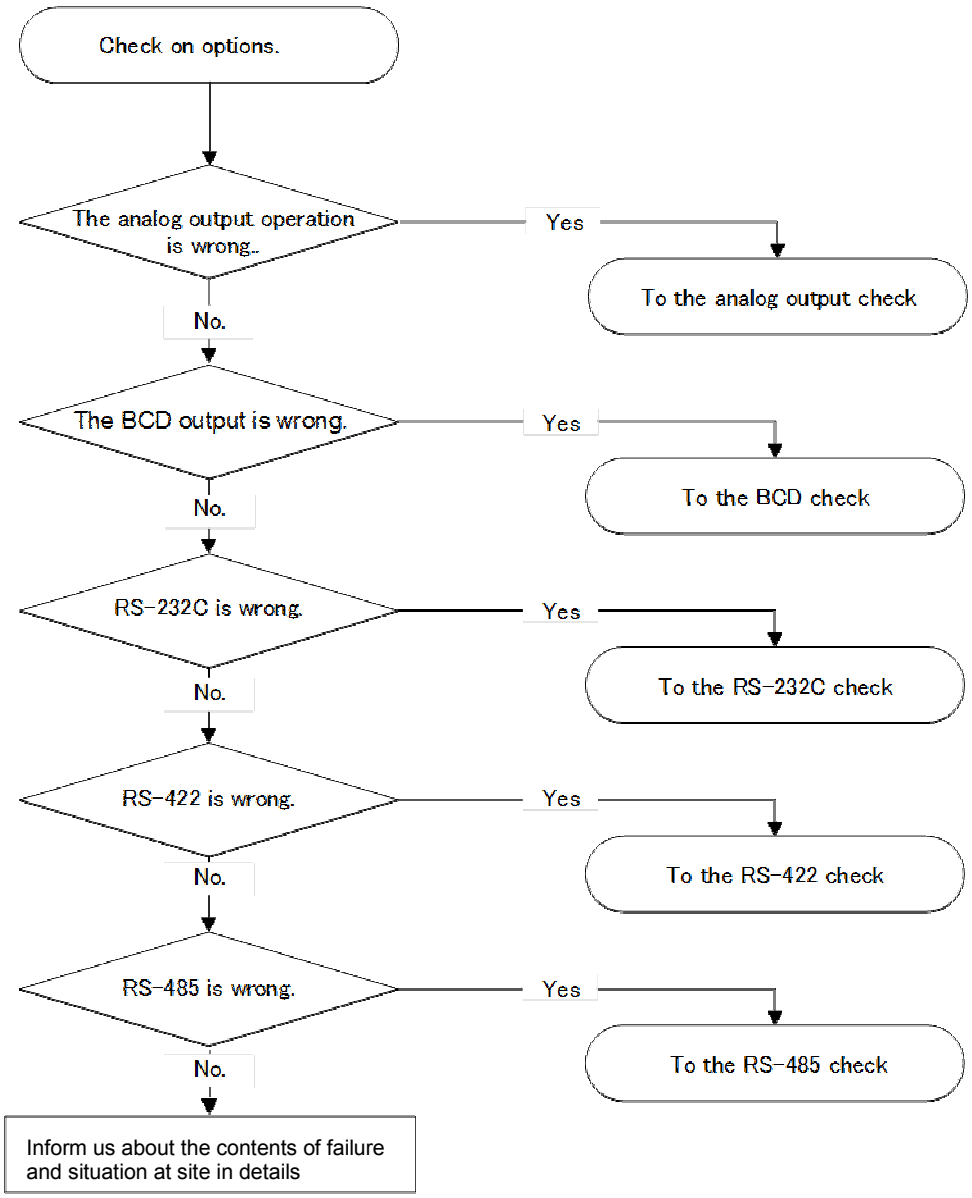
Check on options.
The analog output operation is wrong..
Yes
To the analog output check
No.
The BCD output is wrong.
Yes
To the BCD check
No.
RS-232C is wrong.
Yes
To the RS-232C check
No.
RS-422 is wrong.
Yes
To the RS-422 check
No.
RS-485 is wrong.
Yes
To the RS-485 check
No.
Inform us about the contents of failure and situation at site in details

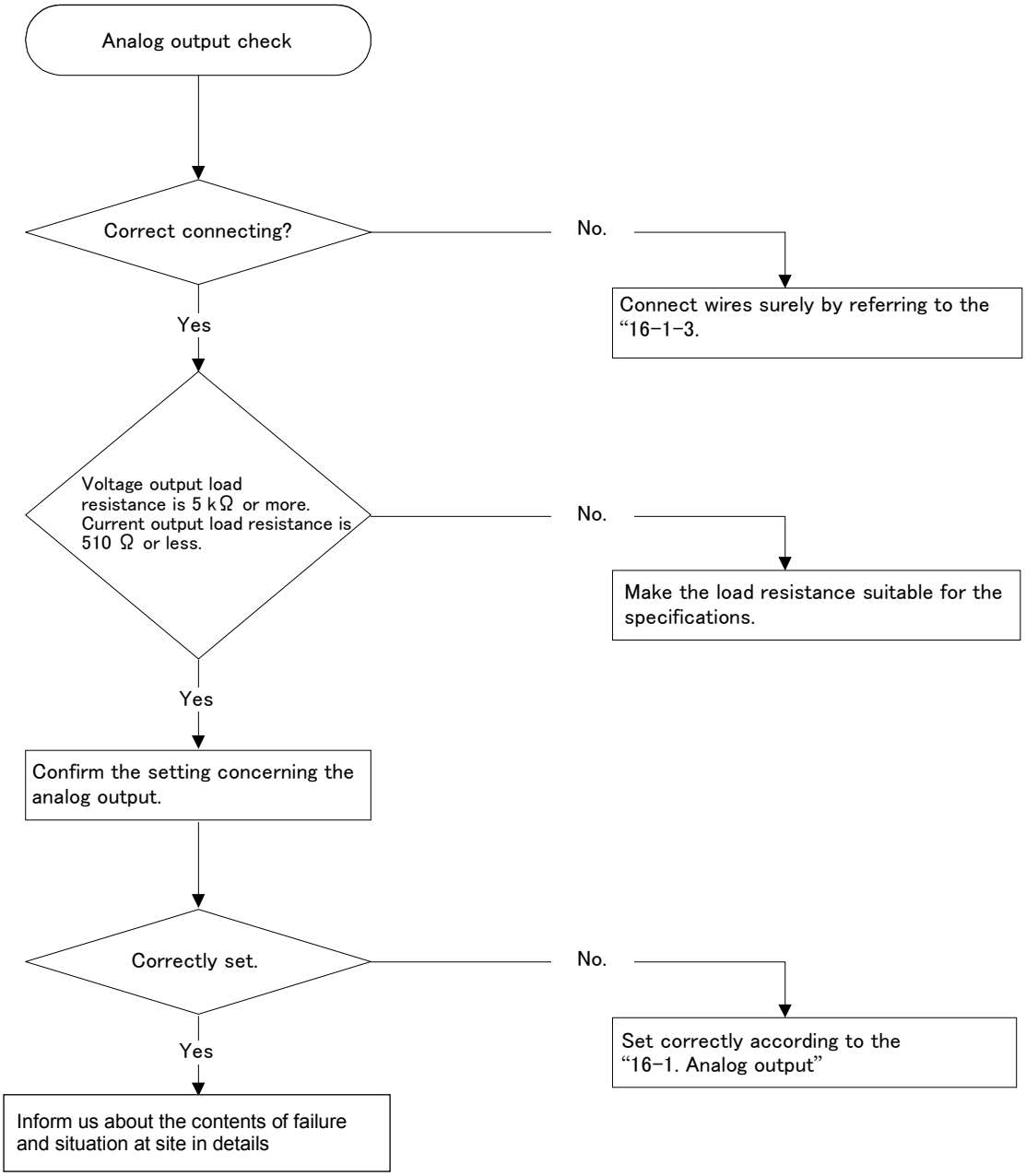
Analog output check
Correct connecting?
No.
Connect wires surely by referring to the "16-1-3.
Yes
Voltage output load resistance is 5 kΩ or more. Current output load resistance is 510 Ω or less.
No.
Make the load resistance suitable for the specifications.
Yes
Confirm the setting concerning the analog output.
Correctly set.
No.
Set correctly according to the "16-1. Analog output"
Yes
Inform us about the contents of failure and situation at site in details

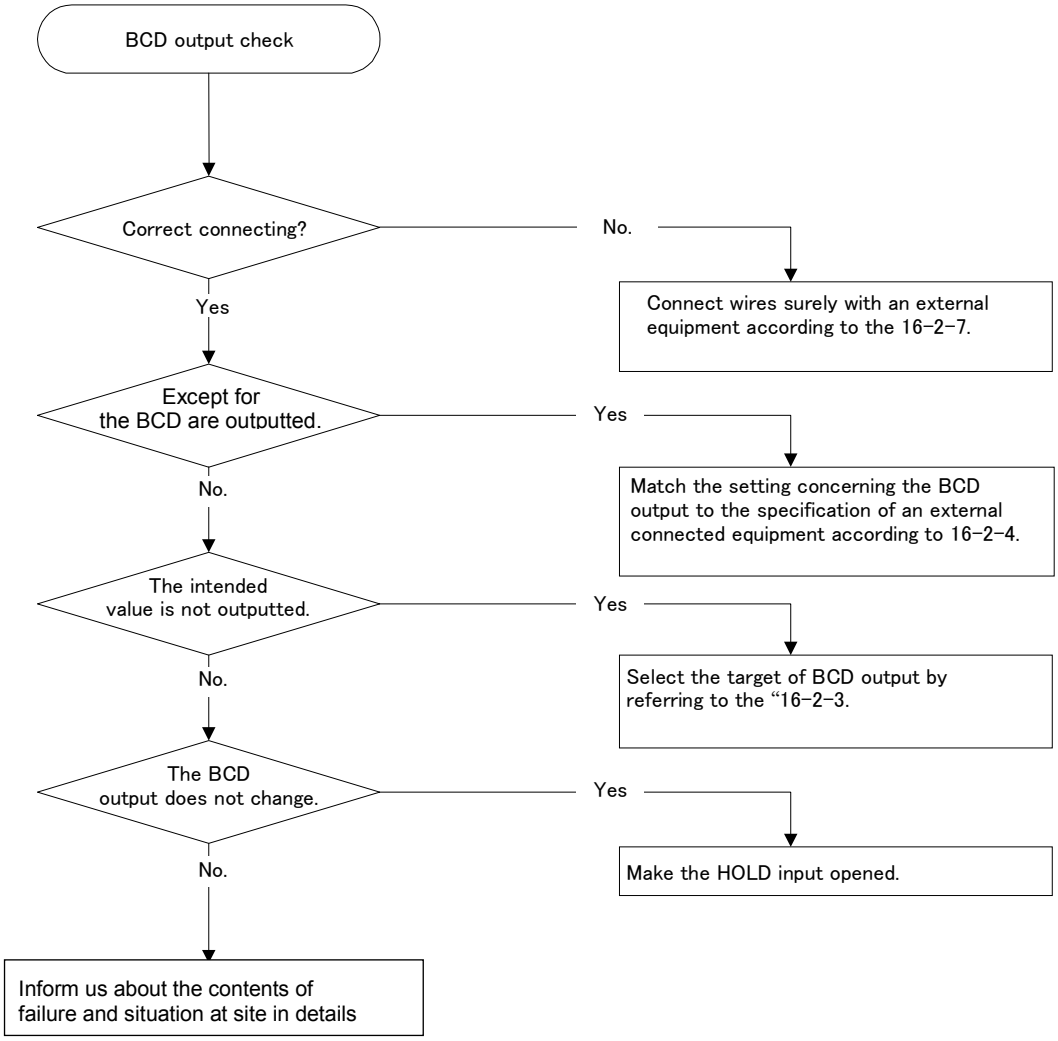
BCD output check
Correct connecting?
No.
Connect wires surely with an external equipment according to the 16-2-7.
Yes
Except for the BCD are outputted.
Yes
Match the setting concerning the BCD output to the specification of an external connected equipment according to 16-2-4.
No.
The intended value is not outputted.
Yes
Select the target of BCD output by referring to the “16-2-3.
No.
The BCD output does not change.
Yes
Make the HOLD input opened.
No.
Inform us about the contents of failure and situation at site in details

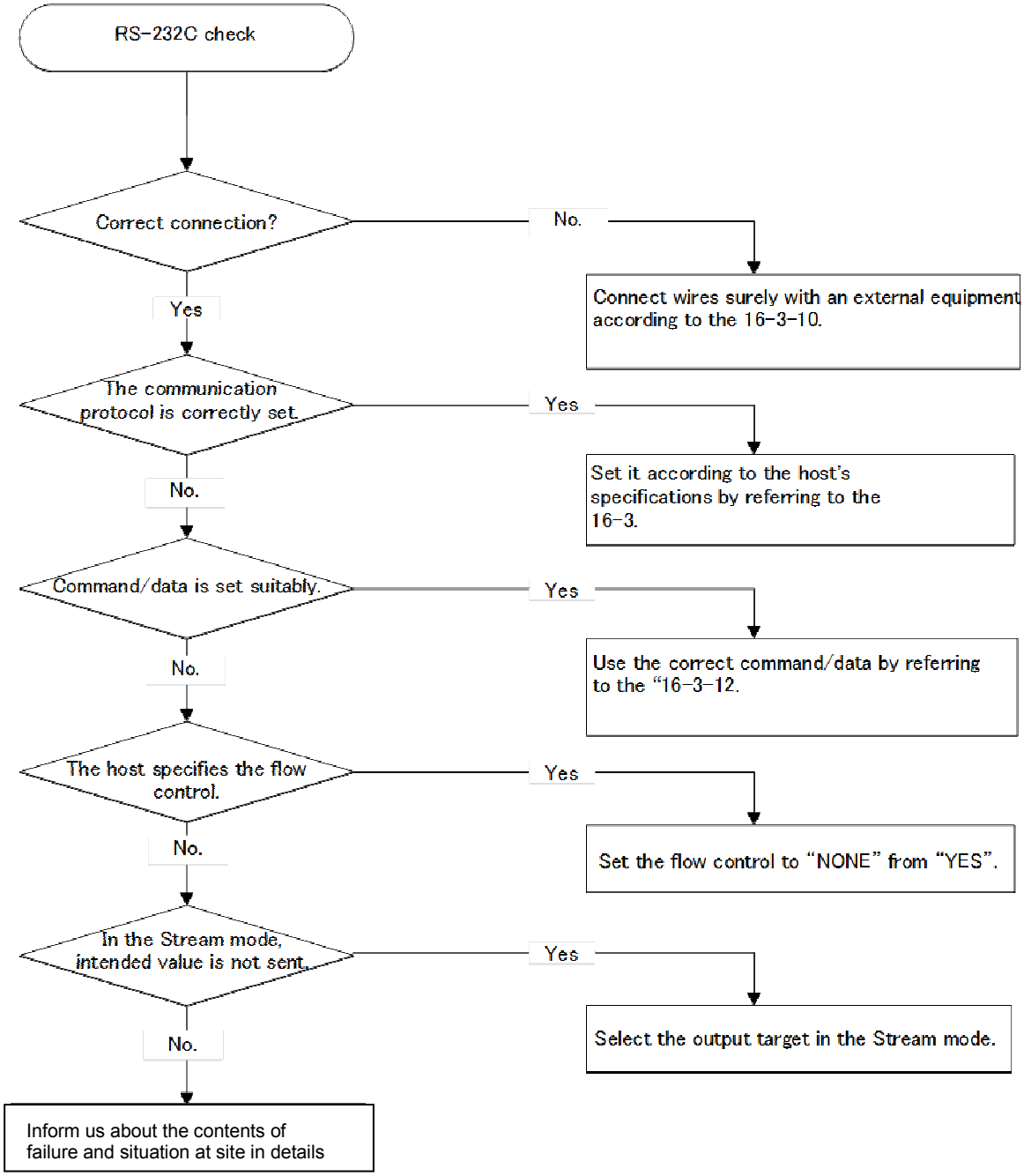
RS-232C check
Correct connection?
No.
Connect wires surely with an external equipment according to the 16-3-10.
Yes
The communication protocol is correctly set.
Yes
Set it according to the host's specifications by referring to the 16-3.
No.
Command/data is set suitably.
Yes
Use the correct command/data by referring to the "16-3-12.
No.
The host specifies the flow control.
Yes
Set the flow control to "NONE" from "YES".
No.
In the Stream mode, intended value is not sent.
Yes
Select the output target in the Stream mode.
No.
Inform us about the contents of failure and situation at site in details

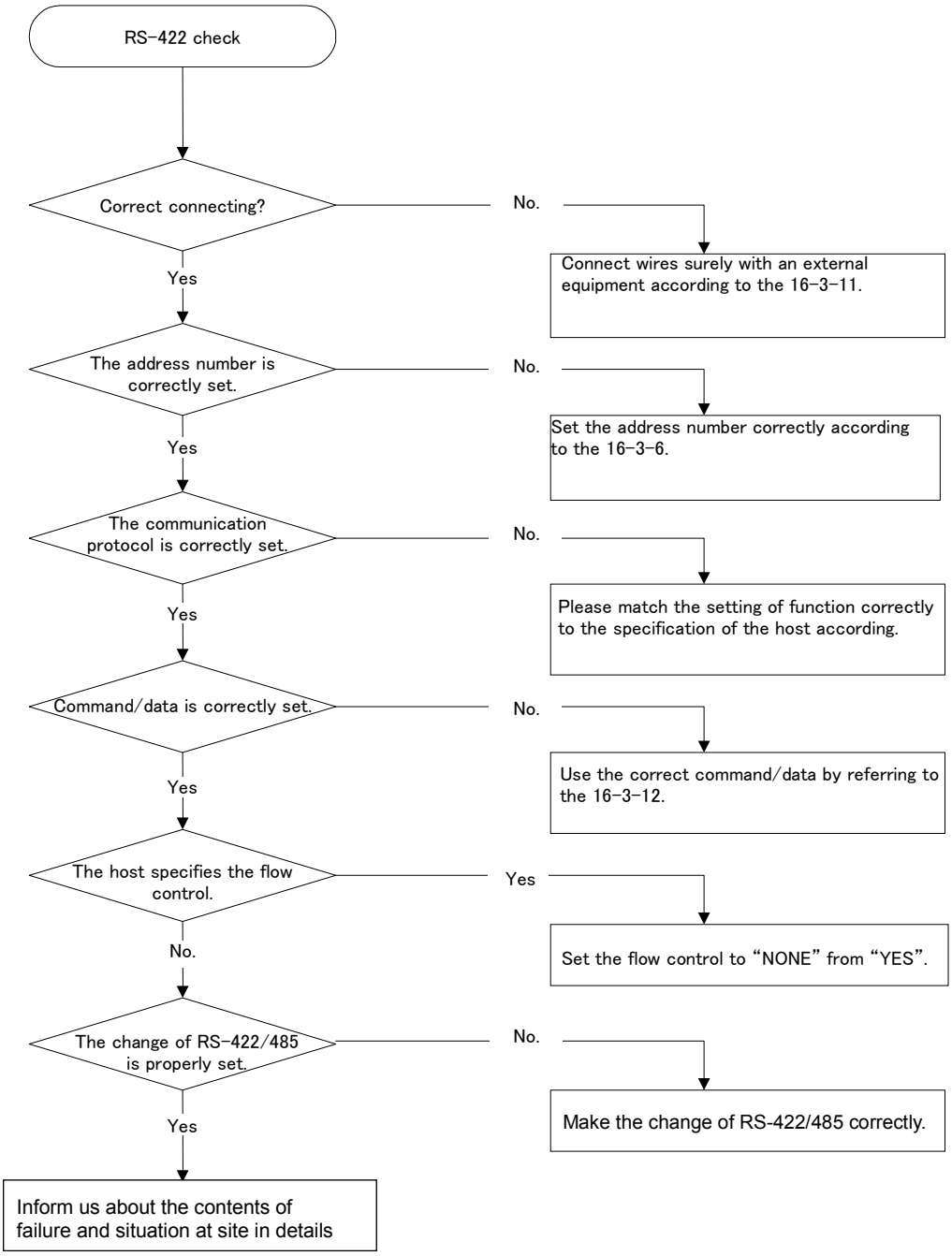
RS-422 check
Correct connecting?
No.
Connect wires surely with an external equipment according to the 16-3-11.
Yes
The address number is correctly set.
No.
Set the address number correctly according to the 16-3-6.
Yes
The communication protocol is correctly set.
No.
Please match the setting of function correctly to the specification of the host according.
Yes
Command/data is correctly set.
No.
Use the correct command/data by referring to the 16-3-12.
Yes
The host specifies the flow control.
Yes
Set the flow control to “NONE” from “YES”.
No.
The change of RS-422/485 is properly set.
No.
Make the change of RS-422/485 correctly.
Yes
Inform us about the contents of failure and situation at site in details

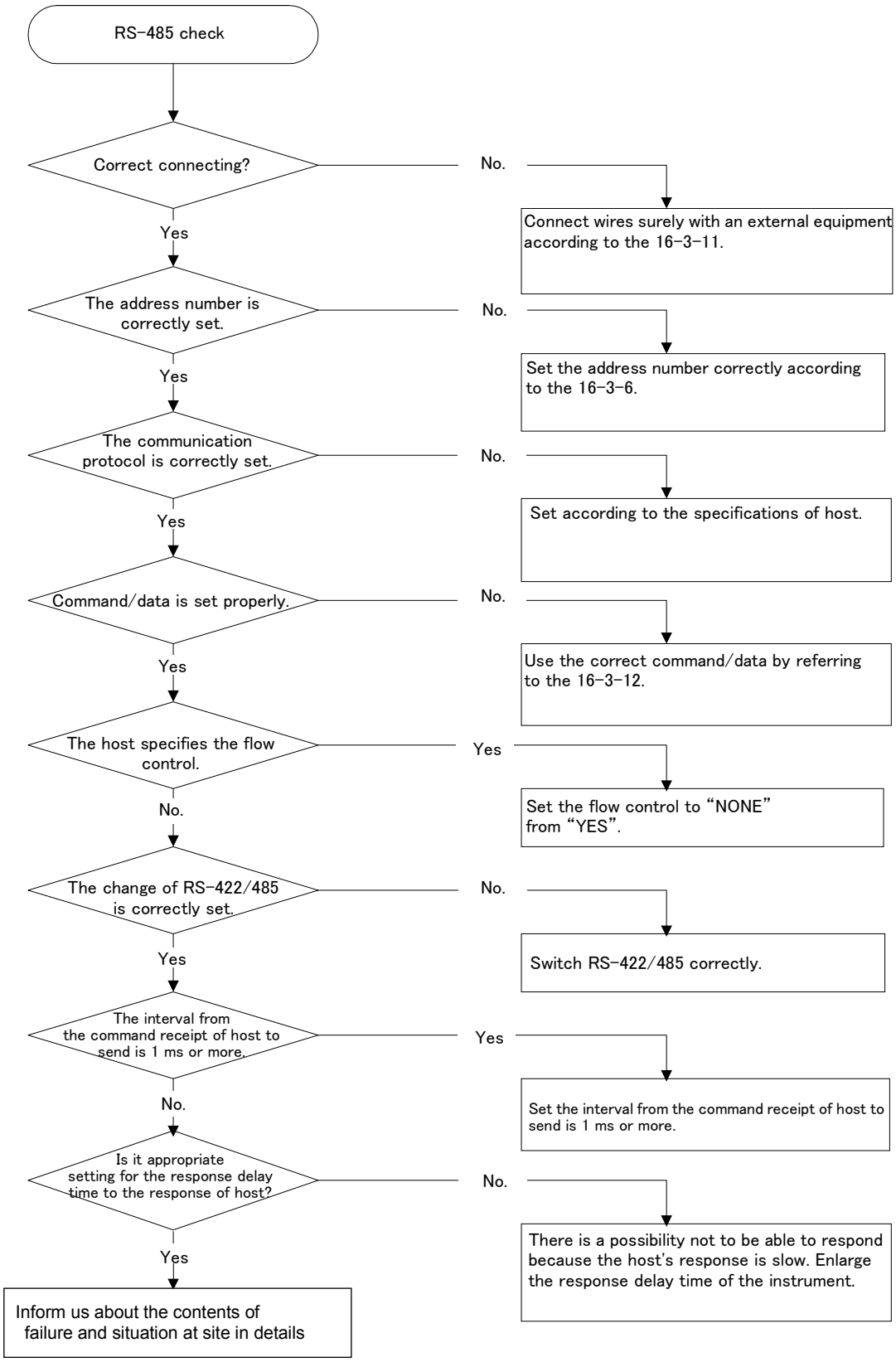
RS-485 check
Correct connecting?
No.
Connect wires surely with an external equipment according to the 16-3-11.
Yes
The address number is correctly set.
No.
Set the address number correctly according to the 16-3-6.
Yes
The communication protocol is correctly set.
No.
Set according to the specifications of host.
Yes
Command/data is set properly.
No.
Use the correct command/data by referring to the 16-3-12.
Yes
The host specifies the flow control.
Yes
Set the flow control to "NONE" from "YES".
No.
The change of RS-422/485 is correctly set.
No.
Switch RS-422/485 correctly.
Yes
The interval from the command receipt of host to send is 1 ms or more.
Yes
Set the interval from the command receipt of host to send is 1 ms or more.
No.
Is it appropriate setting for the response delay time to the response of host?
No.
There is a possibility not to be able to respond because the host's response is slow. Enlarge the response delay time of the instrument.
Yes
Inform us about the contents of failure and situation at site in details

18. Specifications

18-1. Analog specifications

Bridge power supply		DC10 V±0.5 V (5 V, 2.5 V) within 180 mA, with remote sensing
Applicable transducers		Up to 6 pieces of strain gage applied transducers (350 ohm) can be connectable.
Input sensitivity		0.2 μV/d or more (d= minimum scale)
Input range		-3.1 mV/V ~ 3.1 mV/V
Zero adjustment range		±2.5 mV/V
Non linearity		0.01 %F.S.
Influence due to temperature change	Zero point	±0.2 μV/℃ (When the calibration is made at 0.2 μV/d or more of the input sensitivity.)
	Sensitivity	±0.000 8 %F.S./℃(Calibrated at 0.2 μV/d of input sensitivity or more.)
Input noise		±0.2 μVp-p or less. (When the calibration is made at 0.2 μV/d or more of the input sensitivity.)
Analog filter		Approx. 4 Hz (Approx. 2, 6, 8, and 10 Hz can be changed.)
A/D sampling		200 times/s (Changeable to 20 times/s.)
A/D internal resolution		24 bits

18-2. Specifications for digital

Load display	Display range	The accumulation value display range is from –9 999 999 9999 to 9 999 999 999, and accumulation times is from 0 to 999 999.
	Display increment	1 (Changeable to 2, 5, 10, 20 or 50)
	Display unit	7-segment green colored fluorescent display tube with character's height 11.55 mm, 7 digits
	Over display	[-OL] display at minus over, [OL] display at plus over
	AD value over display	[-OVF] display at minus over, [OVF] display at plus over
Sub display	Display range	Accumulation total display -19 999 999 ~ 99 999 999, Accumulation times 0 ~ 999 999.
	Display unit	7-segment green colored fluorescent display tube with character's height 5 mm , 18 digits
	Display details	OFF (Changeable: Brand / Accumulation times / Accumulation value, Brand / Accumulation times / Last accumulated data, brand / Last accumulated data / Accumulation value, Brand / Last accumulated data / OK, Brand / Accumulation times / OK, Brand / OK / Accumulation value, Brand / Near zero / Full, OK / Over / Under, Brand / OK / Free fall, Brand / S1 / S2, brand / S1 / S3, brand / S1 /S4, brand /S2 / S3, Brand / S2 / S4, brand / S3 / S4, brand / OK, brand / Over / Under, Brand / Accumulation times, Brand / Accumulation value or Brand / Last accumulated data)
Condition display		STABLE, PRE.TARE, TARE, GROSS, NET, CZ, HOLD, ERROR, Z-BAND OK/S0, F.FLOW/S1, M.FLOW/S2, D.FLOW/S3, OVER/S4, UNDER, FULL
Display rate		4 times/s (Changeable: 20 times/s)
Decimal point display		Changeable: No display, 10^1, 10^2 , 10^3 and 10^4.
Unit display		Changeable: No display, g, kg, t , N, kN or lb

18-3. Interface

External control input	Any nine of the following functions can be selected. OFF, [ON/OFF] key operation, [SET] key operation, [ACCUM.] key operation, [PRESET TARE/] key operation, [TARE/▲] key operation, [NET/GROSS/▼] key operation, [ZERO] key operation, [F/ ↵] key operation, Zero clear, Tare clear, Flow start, Discharge start, Clear last accumulated data, Accumulation clear, Error cancellation, Print command, Emergency stop, All brand accumulation clear * The above are valid for one time for a pulse input with a pulse width of at least 50 ms. Flow/Discharge changeover, Hold, Net weight display, Brand No. 1, Brand No. 2, Brand No. 4 * The above are valid for input with level input shorted for at least 50 ms.
External control output	13 functions in the following can be arbitrarily selected. OFF, RUN, Stable, During canceling the Tare weight, Display of gross, Display of net, Center zero, During the hold, Error, Abnormal weight, Measuring sequence error, Z-Band, OK (S0), F-flow (S1), M-flow (S2), Dribble flow (S3), Over (S4), Under, Full, During weighing, Finish weighing, Discharge (between the discharge gate), Finish Discharge (between the discharge gate).
Standard 2 wire serial interface	2-wires method serial interface Baud rate : 600 bps Data bit length : 8 bit Parity bit : Odd number Stop bit : 1 bit Start bit : 1 bit Transmission data : Binary code, BCD * An internal circuit and photo-coupler are insulated. * The external control input and common are common.
Standard RS-485 interface	Baud rate : Selectable from 1 200, 2 400, 4 800, 9 600, 19 200 and 38 400 bps. Data bit length : Selectable from 7 bit and 8 bit. Parity bit : Selectable from none, even number and odd number. Stop bit : Selectable from 1 bit and 2 bit Terminator : Selectable from CR+LF and CR. Communication method : Half duplex Synchronous method : Start stop synchronous method Address : Select one from 0 to 31. Communication data : ASCII code Cable length : Approx. 1 km Connectable units : 32 units at maximum Terminating resistance : Externally Data transfer mode: Command, Modbus, Stream, Synchronizing with finish, Synchronizing with accumulation, Synchronizing with print * Internal circuit and common are common.
BCD output (Sold separately.)	Output BCD 8 digits, parallel output with polarity (POL.) applied (Output ON with minus, and output OFF with plus.), P.C. (Print command), Turning on during fixed time after conversion of BCD output is completed. ERROR ON when the various errors occurs. OVER(over), Stable, Gross weight ON when the BCD output is gross weight. * Above are open collector outputs. VCE=DC30 V , IC=DC20 mA at Maximum Input HOLD Holding the BCD output, BCD-ENABLE Compulsorily turned off for the output related with BCD. (Hi-impedance) * Above are level input, and effective during the input of short more than 100 ms.

RS-232C (Sold separately.)	Baud rate	: Selectable from 1 200, 2 400, 4 800, 9 600, 19 200 and 38 400 bps.
	Data bit length	: Selectable from 7 bit and 8 bit
	Parity bit	: Selectable from None, Even and Odd number.
	Stop bit	: Selectable from 1 bit and 2 bit
	Terminator	: Selectable from CR + LF and CR
	Communication method	: Half duplex
	Synchronous method	: Start-stop synchronous method
	Communication data	: ASCII code
RS-422/485 (Sold separately.)	Baud rate	: Selectable from 1 200, 2 400, 4 800, 9 600, 19 200 and 38 400 bps.
	Data bit length	: Selectable from 7 bit and 8 bit
	Parity bit	: Selectable from None, Even and Odd number.
	Stop bit	: Selectable from 1 bit and 2 bit
	Terminator	: Selectable from CR＋LF and CR
	Communication method	: Half duplex
	Synchronous method	: Start-stop synchronous method
	Address	: Selectable one from 0 to 31.
	Transmission data	: ASCII code
	Cable length	: Approx. 1 km
	Connectable units	: 32 units at the maximum (RS-422：10 units)
	Terminal resistance	: Internal
	(Selects the presence by connection of terminal board.)	
	Input/output monitor with LED	
	Changeover the RS-422/485: Set by function.	
Current output (Sold separately.)	Output	: DC4 mA ~ 20 mA
	Load resistance	: 510 ohm or less
	Resoulution	: Approx.1/12 000 or more
	Non-linearity	: 0.02 %F.S.
	Over range	: Approx.DC2.4 mA at [－OL] display and Approx.DC21.6 mA at [OL] display.
	Output times	: 4 times/s, 20 times/s (Synchronous to display times).
	* An internal circuit and photo-coupler are insulated.	
	Effect due to temperature	
	Zero point	: ±0.005 % F.S./ ℃
	Sensitivity	: ±0.01 % F.S./ ℃
Voltage output (Sold separately.)	Output	: DC0 V ~ 10 V
	Load resistance	: 5 k-ohm or more
	Resoulution	: Approx.1/12 000 or more
	Non-linearity	: 0.02 %F.S.
	Over range	: Approx.DC －1 V at [－OL display and Approx.DC11 V at [OL] display
	Output times	: 4 times/s, 20 times/s (Synchronous to display times)
	* An internal circuit and photo-coupler are insulated.	
	Effect due to temperature	
	Zero point	: ±0.015 % F.S./ ℃
	Sensitivity	: ±0.015 % F.S./ ℃

18-4. General specifications

Operating temperature range	Temperature	-10 ℃ ~ 50 ℃ ※The temperature span of JIS B 7611-2 conformity is -10 ℃ ～ 40 ℃
	Humidity	85 %RH or less (Non condensing.)
Storage temperature range		-20 ℃ ~ 60 ℃
Power supply	Power-supply voltage	AC100 V ~ AC240 V (Permissible variable range AC85 V ~ AC264 V)
	Power supply frequency	50/60 Hz
	Power consumption	Approx. 10 VA (without options, at AC100 V) Approx. 18 VA (with options at AC100 V)
Outline dimensions (W×H×D)		144 mm(W)× 72 mm(H)× (less than)146.7 mm(D) (excludes protruding parts)
Weight		Approx.1.0 kg (without options)

18-5. Standard specifications at the time of shipment

Bridge excitation	DC10 V
Span adjustment	10 000 displays with the input of 0.3 mV/V.
Scale interval	1

18-6. Accessories

Instruction Manual	1 piece
Time lag Fuse(2.5A)	1 piece
I/O connector for external control	1 piece (connector: FCN-361J024-AU, connector cover: FCN360C024-B)
Connector for standard communication	1 piece (plug :XW4B-06B1-H1)
Short bar, between A-F and C-G	2 pieces
Panel mount gasket	1 piece
Connector for BCD output	1 piece (Attached only when optional BCD output is installed.)
Instruction manual for optional CC-LINK	1 piece (Attached only when optional CC-LINK interface is installed.)
CC-LINK connector	1 piece (Attached only when optional CC-LINK interface is installed.)

19. Error display

19-1. Error Load display

Er-1	Display blinking for about 2 seconds when C function or function is set and no number in the list is selected.
Er-2	Display blinking for about 2 seconds when the calibration is executed, and [Display of the weighing capacity (DISP)] < [Set of mass weight value (LOAD)] is set.
Er-3	A/D conversion error. Please contact with us.
Er-E	EEPROM writing error. Please contact with us
Er-r	EEPROM reading error. Please contact with us.
rE-L	Display blinking for about 2 seconds when the calibration is executed and output of the load cell and numeric input is –2.5 mV/V or less and exceeding the zero adjustment range at the minus side.
rE-H	Display blinking for about 2 seconds when the calibration is executed, and output of the load cell and numeric input is 2.5 mV/V or more and exceeding the zero adjustment range at the plus side.
SP-L	Display blinking for about 2 seconds when the calibration is executed and output of the load cell and numeric input is less than 0 mV/V and not reaching within the span adjustment range.
SP-H	Display blinking for about 2 seconds when the calibration is executed and output of the load cell and numeric input is more than 3.1 mV/V and exceeding the span adjustment range.
Ln-L	Display blinking for about 2 seconds when the digital linearization compensation is executed and the load cell output is low.
Ln-H	Display blinking for about 2 seconds when the digital linearization compensation is executed and the load cell output is high.
- - - - - -	(When C function CF-15 [Power on zero operation] is effective.) Displayed when the power is turned on or the display is ON with the condition of the load cell output exceeding ±10 % of the weighing capacity. If the SET key is pressed with [- - - - - -] displayed, it compulsorily becomes a load value display.
oL	Light on when the load display is exceeding [(+Weighing capacity) + 9D], or exceeding [+110 % of weighing capacity]. (by the setting of C function CF-03)
-oL	Light on when the load display is exceeding [(-Weighing capacity)-9D], or exceeding [-110 % of the weighing capacity], or exceeding [- 20D] (by the setting of C function CF-03)
oUF	The input to A/D converter is plus over.
-oUF	The input to A/D converter is minus over.
All lights	Display blinking when the result of accumulated value or the accumulated count is exceeding the display range.
bArL	Battery LO error. Please contact us.
Er-b	Damage on backed up data. Please contact us.

19-2. Error sub display

Error code	Contents	Measures
Err-ZEro	In case of execute ZERO out of range of zero	Check the range of zero is appropriate.
Err-TArE	In case of execute TARE out of range of tare.	Execute the TARE within the range of tare.
Err-ACCU	When the accumulated value and the accumulated count exceeding the display range results.	As the accumulating condition display blinks, please execute to clear the accumulated and count.

Error display at sub display has been blinking, as long as sequence error is not release.
Press the F key to release sequence error.

20. Display of sequence error

Error code	Error No.	Contents	Measures
SqErr-0	1	Stop compulsorily by inputting the temporary stop while weighing	Execute the restart after checking the source of the temporary stop.
SqErr-2	3	When the load value is under even if the supplementary flow is executed.	Execute the restart after changing the supplementary flow time and numbers.
SqErr-3	4	When there is contradiction in the amount of the comparison value.	Solve the contradiction of amount after checking the setting value.
SqErr-4	5	When the batching time exceeds the limited time.	Check the blocking at the batching gate.
SqErr-5	6	When the discharging time exceed the limited time.	Check the blocking at the discharging gate.
SqErr-6	7	When the gross value is smaller than the final value in discharge control.	Add the BRAND.
SqErr-7	8	When the net value > (final value – free fall) in the start	Remove the contents in the container.
SqErr-9	9	When the measurement begins in the condition that START ABOVE Near zero is [VALID], the container is not put on the measuring section.	Check that whether the container is put.

Sequence error display has been blinking at sub display, as long as sequence error is not release.
Press the F key to release sequence error.

21. Warranty

21-1. Warranty

The instrument is covered by a warranty for a period of one year from the date of delivery.

As for repairs and/or after service is required during the period of warranty, contact with us sales office or sales agent from which you have purchased.

21-2. Repair

Before asking repairs, check once again that the connection, setting and adjustment for the instrument have finished properly.

Especially, check whether the connections of strain gage applied transducers are disconnected or cut off.

As a result of checking, still there may have some defects in the instrument, contact with our sales office or sales agency from which you have purchased.

22. Lifetime of used parts

The parts used in the instrument will have lifetime. It may differ depending to application method and environmental conditions, the rough standard of lifetime of each shall be as follows:

Name of Parts	Application	Rough standard of lifetime
Display module	Display	Approx. 45000 hours (Environmental temperature : 50℃)
EEPROM	Record of set data	Write to EEPROM. Approx.1 000 000 times.
Electrolytic capacitor	For smoothing switching power supply	Approx.10 years（Environmental temperature : 20℃）
Battery	Back up of RAM	Approx.10 years（Environmental temperature : 20℃）

22-1. Display module

When using CSD-903 at the ambient temperature of approx. 50℃, the display will flicker is about 45,000 hours, and the phenomenon of the luminance's decreasing.

22-2. EEPROM

When writing is made to EEPROM more than the time of lifetime, you can't write to the data any more, so exchange shall be required.

22-3. Electrolytic capacitor

It may be influenced largely by some applied conditions such as environmental temperature and so on.

22-4. Battery

It may be influenced largely by some applied condition such as environmental temperature and so on, but the lifetime shall be for approx. 10 years in room temperature at 20 ℃.

23. Exchange of fuses

23-1. Exchange procedure of fuse

Warning

When installation method for the fuse is wrong and/or capacity of installed fuse is inadequate, it causes an unexpected faulty of the instrument.

(13) Set OFF the power supply for the instrument.
(14) Remove the 6 pieces of screws on the rear panel.

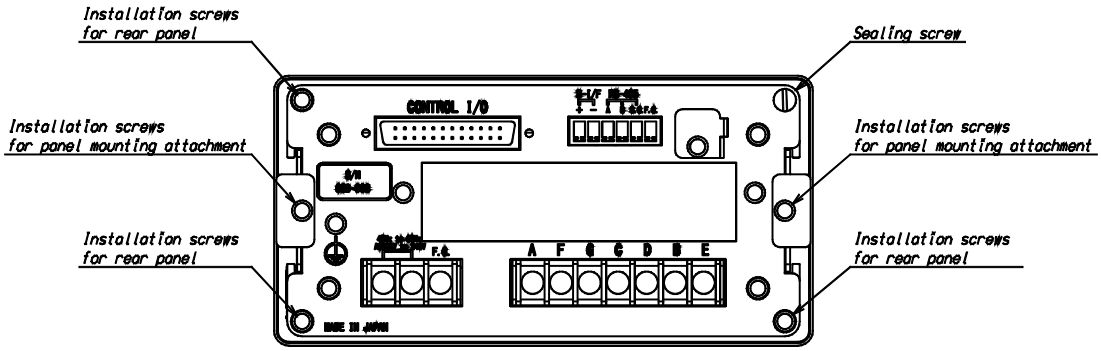

(15) Draw out the contents of the instrument by holding the rear panel to the case direction slowly
(16) Replace the fuse installed on the P.C. board.

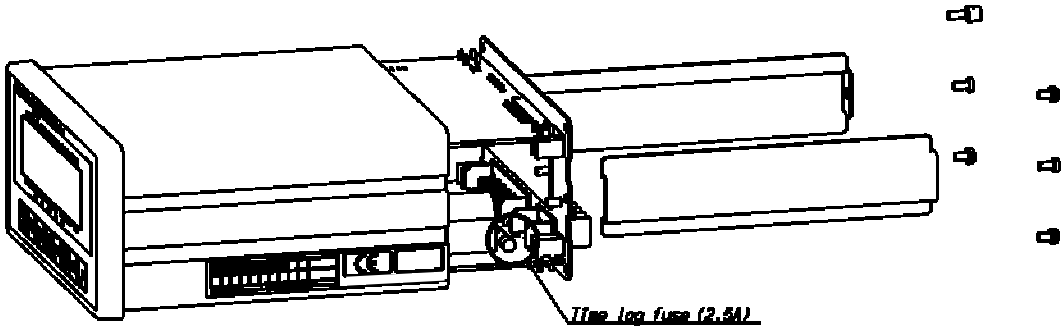

(17) After replacing the fuse, insert the rear panel into the case.
(18) Remove the 6 pieces of screws on the rear panel. Check that the rear panel and the case are attached closely.

Warning

If a rear panel has not stuck to the case, there is a possibility that the display does not light, or the key cannot be operated.

24. Display character pattern

The display pattern in seven segments indicator of this instrument is shown in the table below.

0	0	D	d	Q	q
1	1	E	E	R	r
2	2	F	F	S	5
3	3	G	G	T	t
4	4	H	H	U	U
5	5	I	i	V	v
6	6	J	J	W	w
7	7	K	k	X	x
8	8	L	L	Y	y
9	9	M	m	Z	z
A	A	N	n	?	?
B	b	O	o	!	!
C	C	P	P	–	–

25. Setting table for functions

Make use of them in case that the customer has changed setting for the function.

Setting table for C function

Function No.	Initial value	Customer's setting	Function No.	Initial value	Customer's setting
CF-01	0		CF-27	10	
CF-02	1		CF-28	9.797	
CF-03	2		CF-29	9.797	
CF-05	0		CF-40	0	
CF-07	0		CF-41	2	
CF-08	0		CF-42	003000	
CF-10	1		CF-43	3	
CF-11	02		CF-44	006000	
CF-12	1		CF-70	0	
CF-13	00		CF-71	000000	
CF-14	00		CF-72	010000	
CF-15	0		CF-90	1	
CF-16	0		CF-91	10000	
CF-17	0		CF-92	10000	
CF-18	000		CF-93	00000	
CF-20	0		CF-94	03000	
CF-21	0		CF-97	05	
CF-25	0		CF-98	—	
CF-26	10		CF-99	—	

Setting table for SQ function

Function No.	Initial value	Customer's setting	Function No.	Initial value	Customer's setting
SQF-01	1		SQF-27	0	
SQF-02	0		SQF-30	0	
SQF-05	2		SQF-31	0000	
SQF-06	0		SQF-35	000	
SQF-07	0		SQF-36	0	
SQF-10	0000		SQF-37	0000	
SQF-15	0		SQF-38	0000	
SQF-16	0		SQF-40	0000	
SQF-17	0000		SQF-41	0	
SQF-18	0		SQF-45	0	
SQF-20	0000		SQF-46	0000	
SQF-21	0000		SQF-47	0000	
SQF-22	0000		SQF-48	0000	
SQF-24	0		SQF-49	0	
SQF-25	0		SQF-98	—	
SQF-26	00000		SQF-99	—	

MEMO

Setting table for function

Function No.	Initial value	Customer's setting	Function No.	Initial value	Customer's setting
F-01	16		F-48	0	
F-02	1		F-49	0	
F-04	0		F-50	000	
F-05	092		F-51	0	
F-06	020		F-52	0	
F-07	05		F-55	0	
F-08	0000		F-60	00	
F-09	0000		F-61	00	
F-10	020		F-62	00	
F-11	01		F-63	00	
F-15	1		F-64	00	
F-16	00		F-65	00	
F-17	0		F-66	00	
F-18	0001		F-67	00	
F-19	0		F-68	00	
F-20	0000		F-70	00	
F-21	0000		F-71	00	
F-22	0000		F-72	00	
F-23	0		F-73	00	
F-24	0		F-74	00	
F-25	00		F-75	00	
F-26	00		F-76	00	
F-30	0		F-77	00	
F-31	0		F-78	00	
F-32	0000		F-79	00	
F-33	1		F-80	00	
F-34	0		F-81	00	
F-37	0		F-82	00	
F-40	0		F-84	2	
F-41	0		F-85	01	
F-42	13020		F-86	0	
F-43	00		F-87	0	
F-44	0		F-90	—	
F-45	01		F-91	—	
F-46	0		F-99	—	
F-47	0				

Setting table of Sub-display panel (F-19)

Set value	Contents		Set value	Contents	
0	OFF		11	K	Brand (1 digit) / S1 (6 digits) / S3 (6 digits)
1	A	Brand (1 digit) / Accumulation times (6 digits) / Accumulation value (8 digits)	12	L	Brand (1 digit) / S1 (6 digits) / S4 (6 digits)
2	B	Brand (1 digit) / Accumulation times (6 digits) / Last accumulated data (6 digits)	13	M	Brand (1 digit) / S2 (6 digits) / S3 (6 digits)
3	C	Brand (1 digit) / Last accumulated data (6 digits) / Accumulation value (8 digits)	14	N	Brand (1 digit) / S2 (6 digits) / S4 (6 digits)
4	D	Brand (1 digit) / Last accumulated data (6 digits) / OK (6 digits)	15	O	Brand (1 digit) / S3 (6 digits) / S4 (6 digits)
5	E	Brand (1 digit) / Accumulation times (6 digits) / OK (6 digits)	16	P	Brand (1 digit) / OK (6 digits)
6	F	Brand (1 digit) / OK (6 digits) / Accumulation value (8 digits)	17	Q	Brand (1 digit) / Over (5 digits) / Under (5 digits)
7	G	Brand (1 digit) / Near zero (6 digits) / Full (6 digits)	18	R	Brand (1 digit) / Accumulation times (6 digits)
8		OK (6 digits) / Over (5 digits) / Under (5 digits)	19	S	Brand (1 digit) / Accumulation value (10 digits)
9	I	Brand (1 digit) / OK (6 digits) / Free fall (6 digits)	20	T	Brand (1 digit) / Last accumulated data (6 digits)
10	J	Brand (1 digit) / S1 (6 digits) / S2 (6 digits)			

●The contents of this manual may subject to change without notice.

HEAD QUARTER: MinebeaMitsumi Inc.

4106-73 Miyota, Miyota-machi, Kitasaku gun, Nagano-ken 389-0293 Japan
Tel: +81-267-32-2200 Fax: +81-267-31-1350

Sensing Device Product Sales Management:

1-1-1, Katase, Fujisawa-shi, Kanagawa-ken, 251-8531 Japan
Tel: +81-466-23-2681 Fax: +81-466-22-7191

Sensing Device Business Unit

FUJISAWA PLANT 1-1-1, Katase, Fujisawa-shi, Kanagawa-ken, 251-8531 Japan
Tel: +81-466-22-7151 Fax: +81-466-22-1701

KARUIZAWA PLANT 4106-73 Miyota, Miyota-machi, Kitasaku gun, Nagano-ken 389-0293 Japan
Tel: +81-267-31-1309 Fax: +81-267-31-1353

HOMEPAGE ADDRESS http://www.minebea-mcd.com