FABRICATION MATERIALS

PT NO	COMPONENT DESCRIPTION	N.S. (MM)	ITEM CODE	QTY
1	PIPE (GREP) 5.2MM WT API 15LR	100	MC000007062-(1G03)	2.7M
2	REDUCER CONC (GREP) GLASS REINFORCED PLASTIC (GRP)	150 x 100	MC000005754-(1G03)	1
3	ELBOW 90 (GREP) GLASS REINFORCED PLASTIC (GRP)	100	MC000005930-(1G03)	1
4	ELBOW 45 (GREP) GLASS REINFORCED PLASTIC (GRP)	100	MC000005928-(1G03)	1

CUT PIPE LENGTH

PIECE NO	CUT LENGTH	N.S. (MM)	REMARKS	PIECE NO	CUT LENGTH	N.S. (MM)	REMARKS
<1>	905	100		<2>	1070	100	
<3>	627	100					

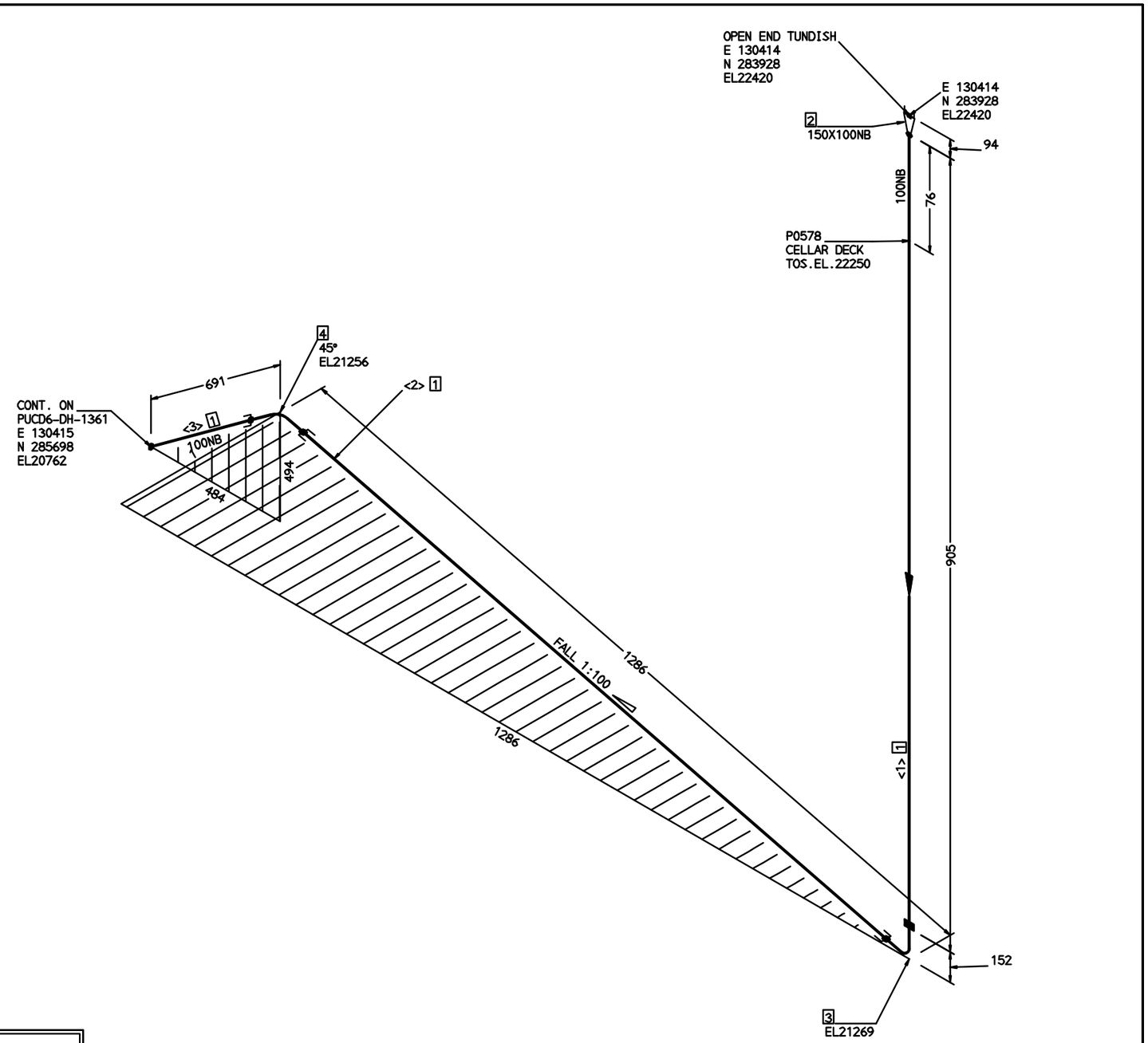

GRP

HOLDS

Notes
1. NO MODIFICATIONS TO CRITICAL LINES WITHOUT PRIOR APPROVAL FROM STRESS DEPARTMENT.

Reference Drawings
FOR ISOMETRIC LEGEND SHEET SEE DRAWING :-
WNB-3000-DX-1000.01

TEST PRESSURE KPa g	1800	LAST ITEM NUMBER				
TEST MEDIUM	POT.WATER					
INSULATION THICKNESS	NONE					
COLOUR CODE	BLACK.W.Y11	LAST WELD NUMBER	C1	03/01/97	APPROVED FOR CONSTRUCTION	AN
PAINT SYSTEM	–		REV	DATE	REVISIONS	BY
N.D.T. CLASS	2					

MATL CODE	COMM. PACK	TEST LOOP NO.	PRIORITY
			6

ISO DATA	: bbrzz05 30-DEC-96
G.A. REFERENCE	: 2601.01
P&ID REFERENCE	: 3027.01/90.02
DESTINATION CODE	: A
AREA	: CD6
STRESS RELIEF	: N
CRITICAL LINE	: N
INSULATION CLASS	:
SPECIFICATION	: 1G3
RFV	C1
DRAWING NUMBER	WNB-PUCD6-DH-1334

WANDOO Alliance
23009