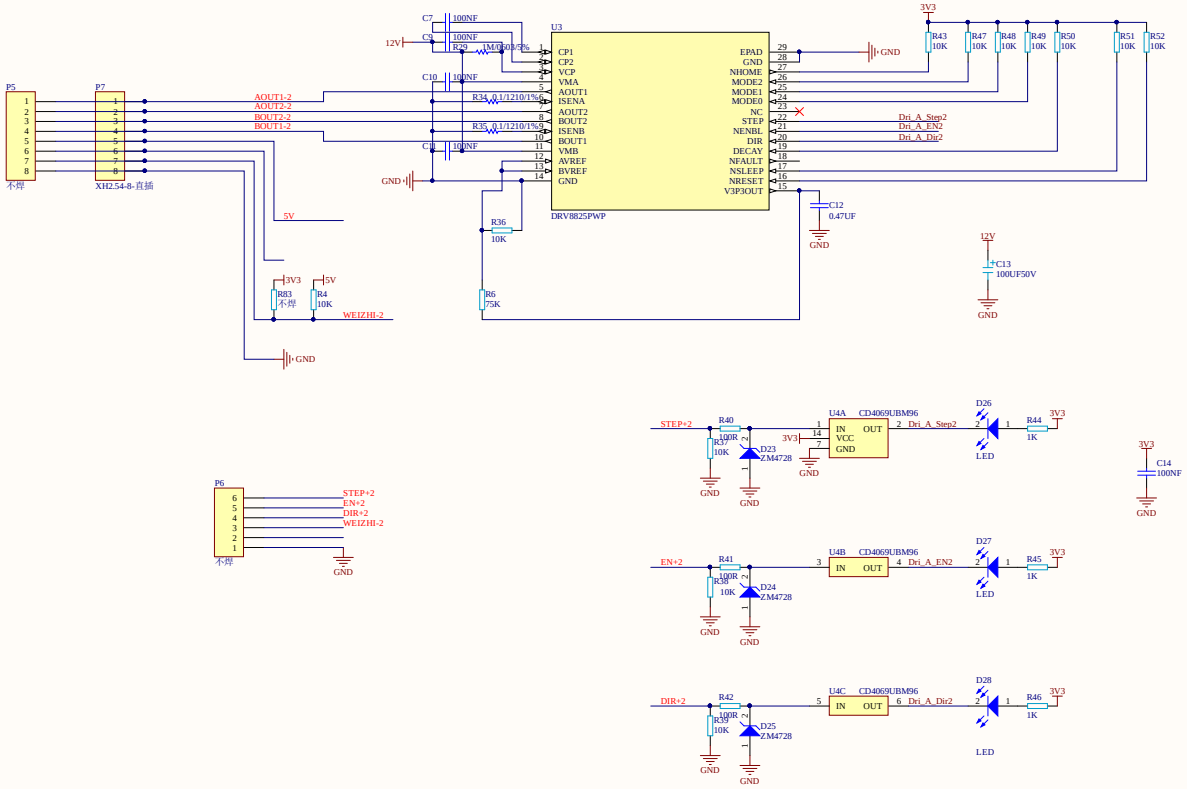

Title		
Size A2	Number	Revision
Date: 2023/11/7		Sheet of
File: E:\杰创科技\.\ad2.SchDoc		Drawn By: