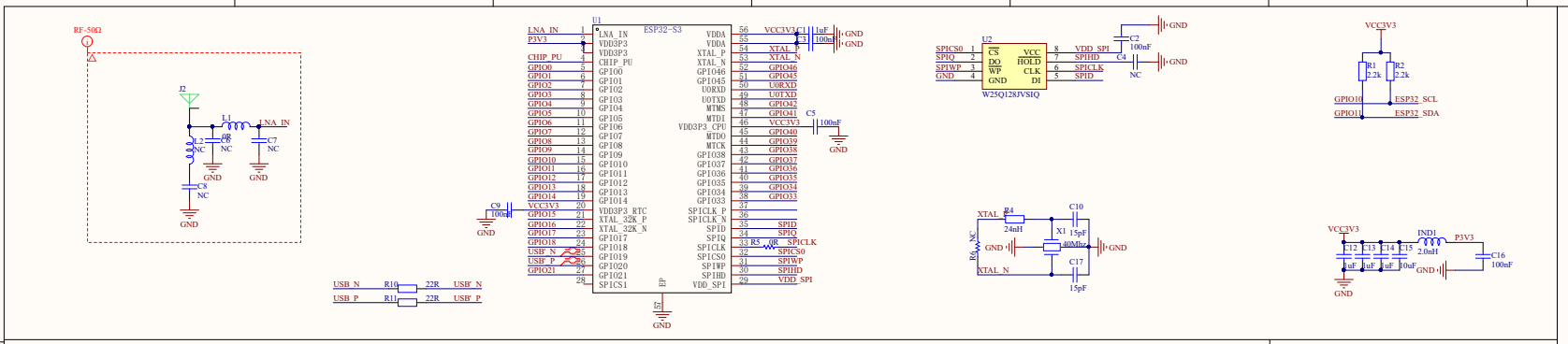

ESP32-S3	LCD	USB	UART	RTC	SHTC3	Buzzer	QMI8658C	SYS	OUT
GPIO1								BAT_ADC	
GPIO2									GPIO2
GPIO3									GPIO3
GPIO4	LCD_DC								
GPIO5	LCD_CS								
GPIO6	LCD_SCL								
GPIO7	LCD_SDA								
GPIO8	LCD_RST								
GPIO9									
GPIO10	TP_SCL			RTC_SCL	SHT_SCL		ESP32_SCL		ESP32_SCL
GPIO11	TP_SDA			RTC_SDA	SHT_SDA		ESP32_SDA		ESP32_SDA
GPIO12									
GPIO13	TP_RST								
GPIO14	TP_INT								
GPIO15	LCD_BL								
GPIO16									
GPIO17									GPIO17
GPIO18									GPIO18
GPIO19		USB_N							
GPIO20		USB_P							
GPIO21									
GPIO33						Buzz			
GPIO34									
GPIO35								SYS_EN	
GPIO36								SYS_OUT	
GPIO37									
GPIO38							GPIO38		
GPIO39									
GPIO40									
GPIO41				RTC_INT					
GPIO42									
GPIO43			U0TXD						U0TXD
GPIO44			U0RXD						U0RXD
GPIO45									
GPIO46									

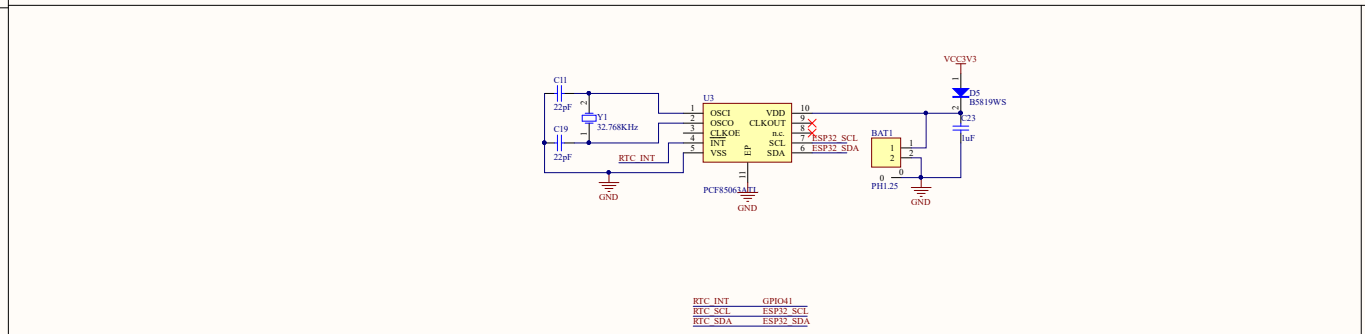

RTC

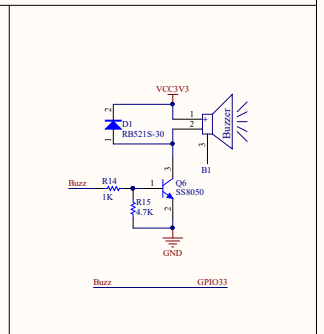

Buzzer

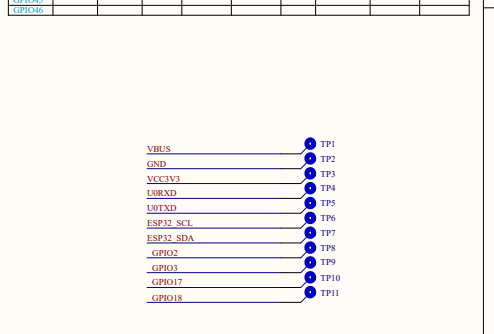

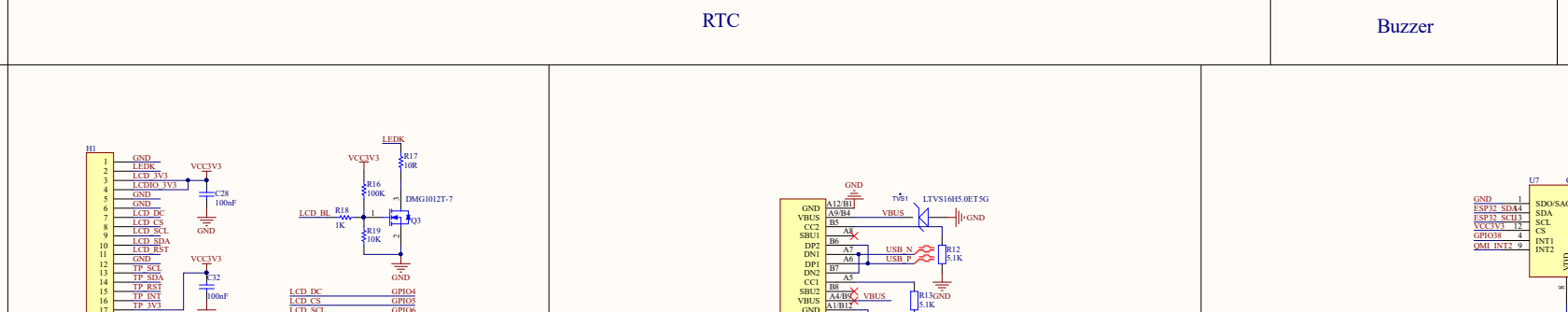

Touch LCD

6/9-Axis

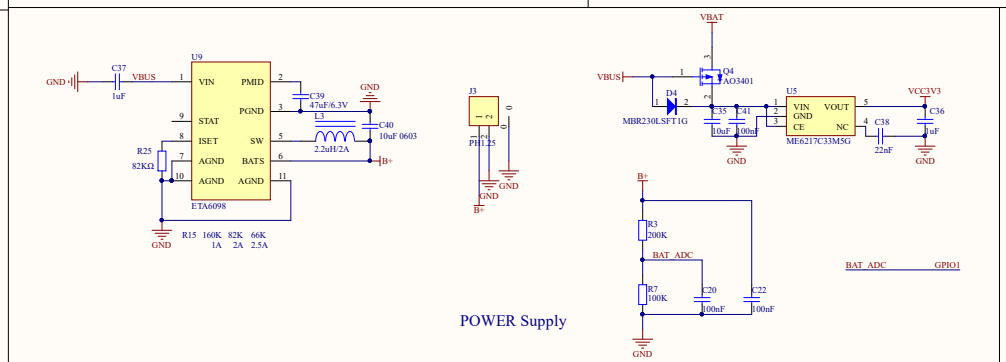

POWER Supply

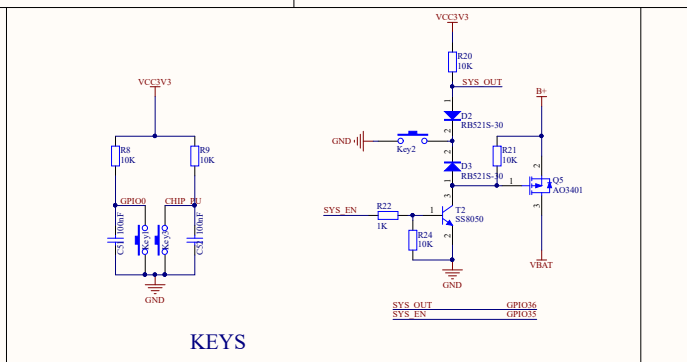

KEYS

Waveshare_logo

ESP32-S3-Touch-LCD-1.69