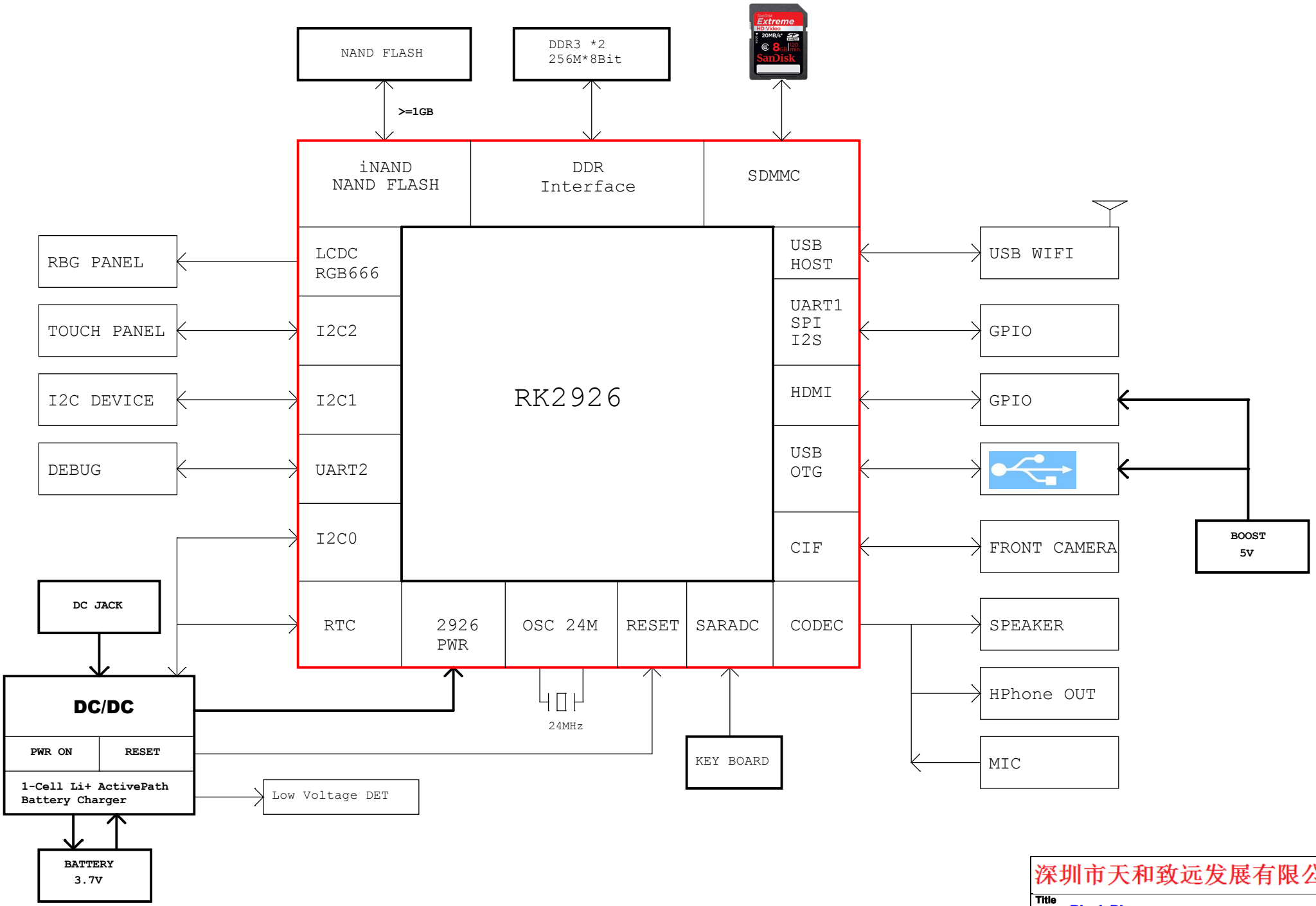

深圳市天和致远发展有限公司

Title	Block Diagram	
Size A3	File TH_AK47_V3	Rev V3
Date: Thursday, December 04, 2014	Sheet 3 of 15	

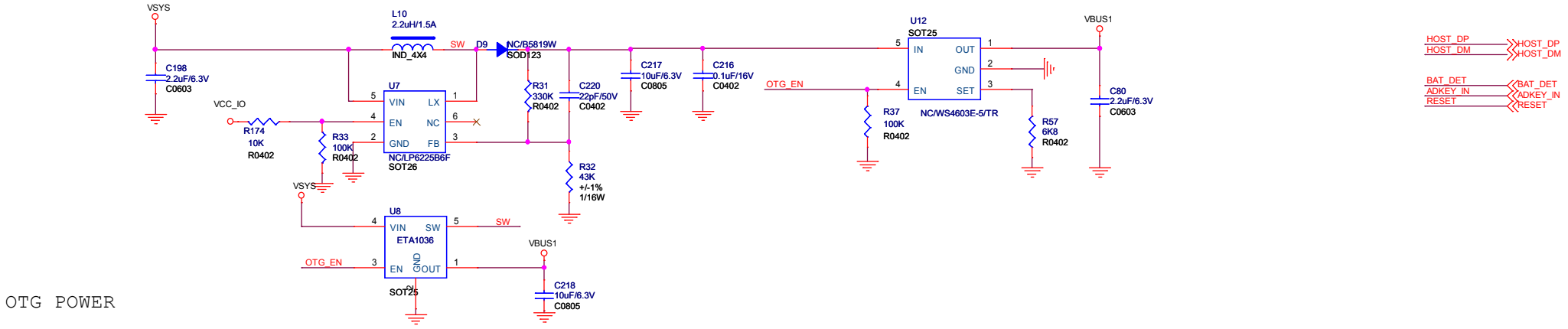

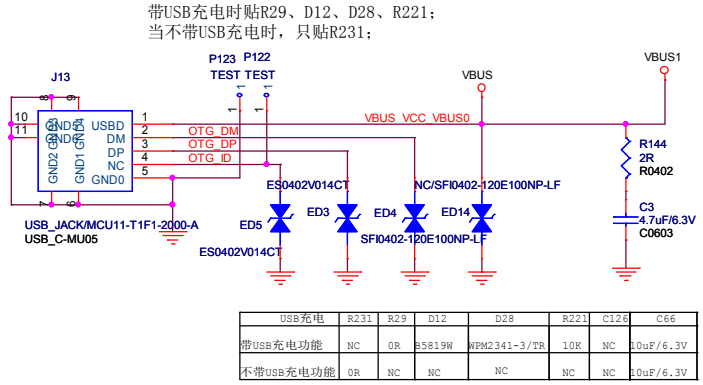

USB充电	R231	R29	D12	D28	R221	C126	C66
带USB充电功能	NC	0R	B5819W	WPM2341-3/TR	10K	NC	10uF/6.3V
不带USB充电功能	0R	NC	NC	NC	NC	NC	10uF/6.3V

USB OTG CONNECTOR

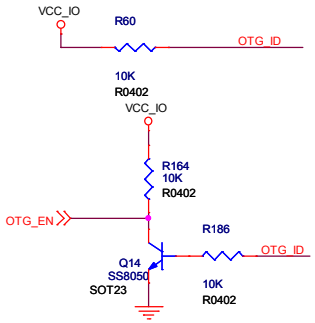

VIBRATION

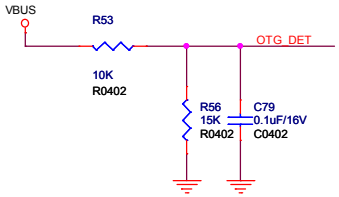

USB_DET

Note:
Adjusted the load capacitance
according to the crystal specification.

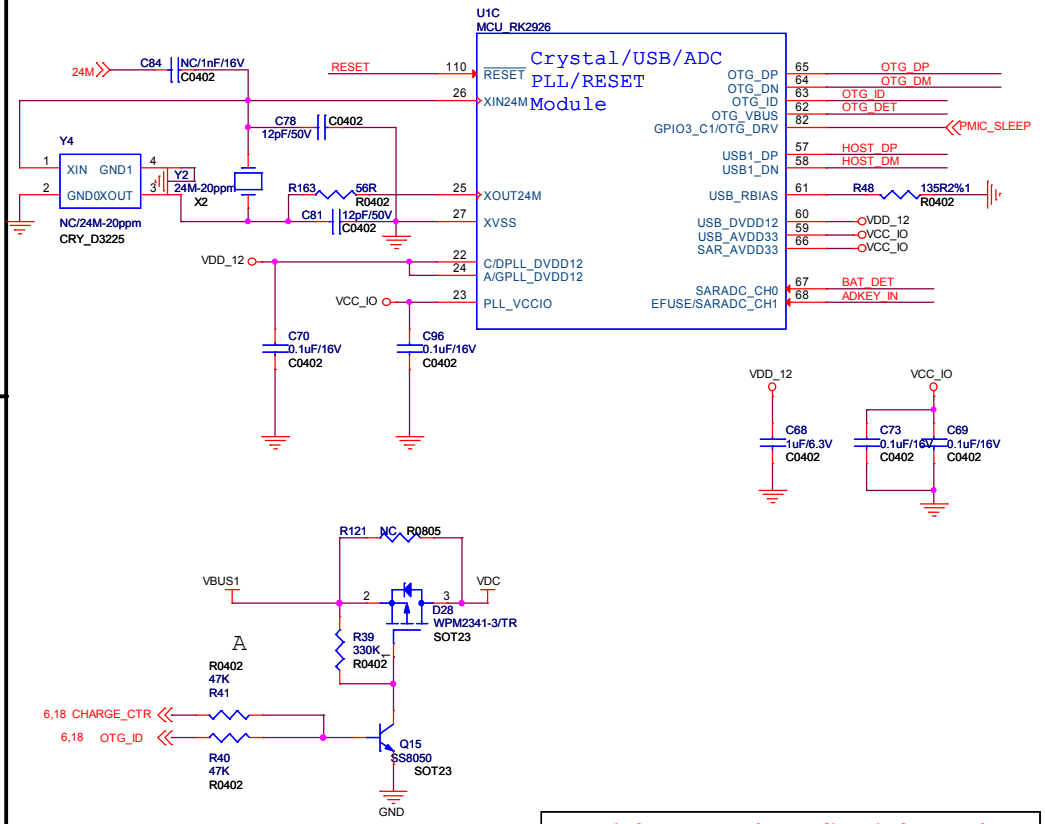

RK2926-C

深圳市天和致远发展有限公司

Title	USB OTG/VIB	
Size A3	File TH_AK47_V3	Rev V3
Date: Tuesday, December 16, 2014	Sheet 7 of 15	

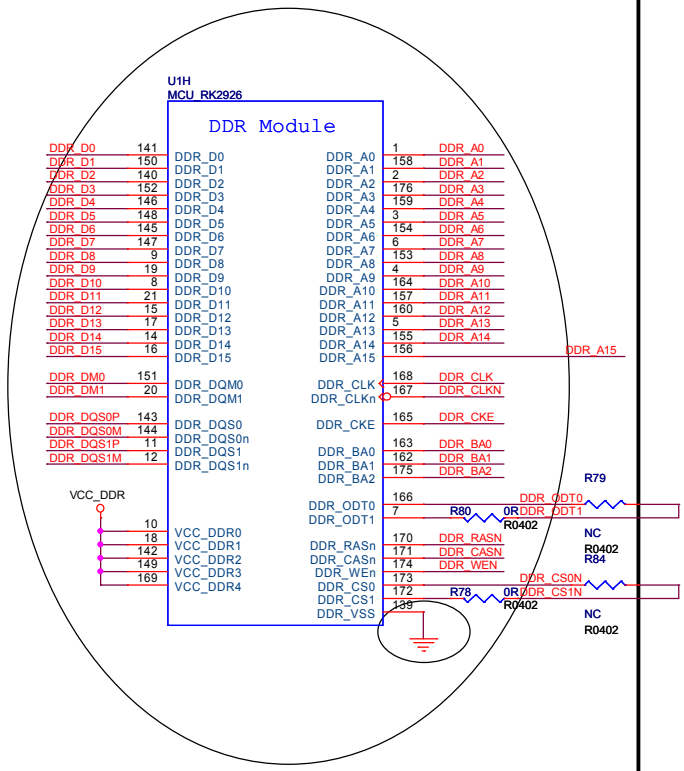

RK2926-H

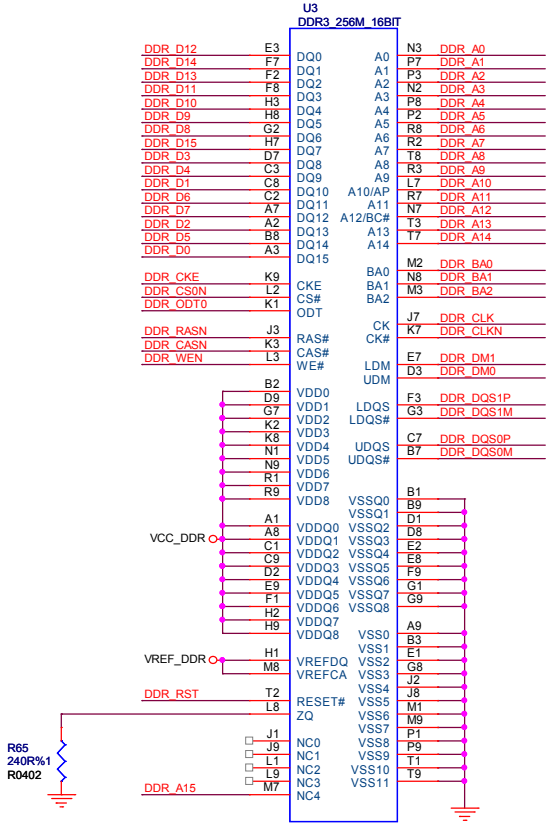

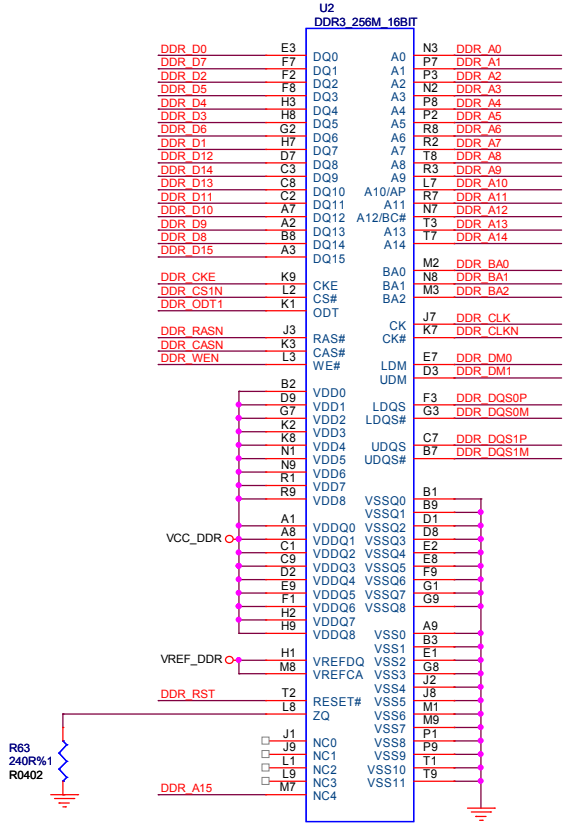

DDR3

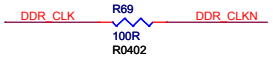

CLK端接电阻放置于分叉端。

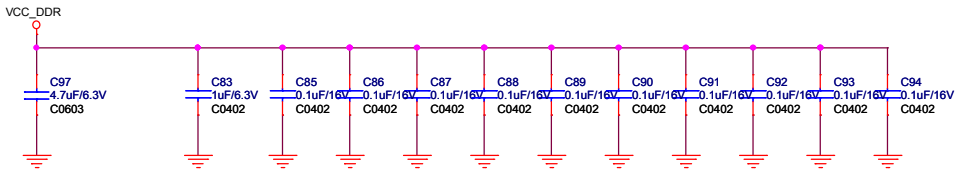

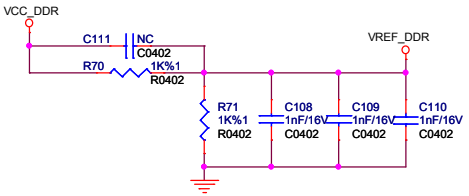

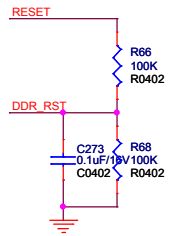

DDR FILTER

深圳市天和致远发展有限公司

Title	DDR3	
Size A3	File 86V_RK2926_V3.1	Rev V3.1
Date: Thursday, December 04, 2014	Sheet 8 of 15	

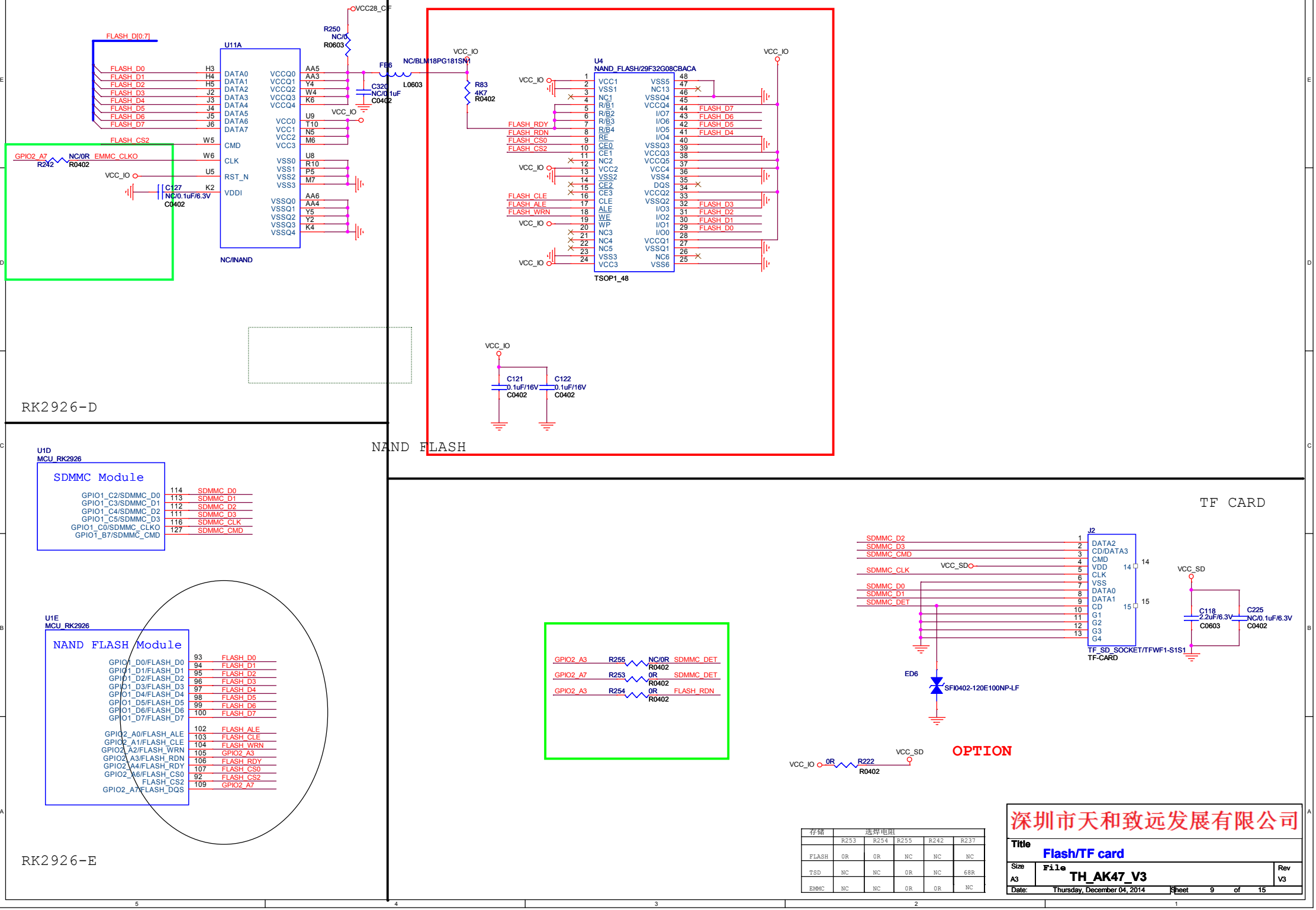

存储	选焊电阻				
	R253	R254	R255	R242	R237
FLASH	0R	0R	NC	NC	NC
TSD	NC	NC	0R	NC	68R
EMMC	NC	NC	0R	0R	NC

深圳市天和致远发展有限公司

Title	Flash/TF card	
Size A3	File TH_AK47_V3	Rev V3
Date: Thursday, December 04, 2014	Sheet 9 of 15	

121	GPIO1_A5/I2S_SDI/SDMMC1_D3		i2s_sdi
122	GPIO1_A4/I2S_SDO/SDMMC1_D2		i2s_sdo
123	GPIO1_A2/I2S_LRCK_RX/SDMMC1_D1		i2s_lrckrx
124	GPIO1_A1/I2S_SCLK/SDMMC1_D0		i2s_sclk
125	GPIO1_A0/I2S_MCLK/SDMMC1_CLKO/XIN_32K		i2s_mclk
127	GPIO1_B7/SDMMC0_CMD		mmc0_cmd
128	GPIO0_A3/I2C1_SDA/SDMMC1_CMD		i2c1_tpsda

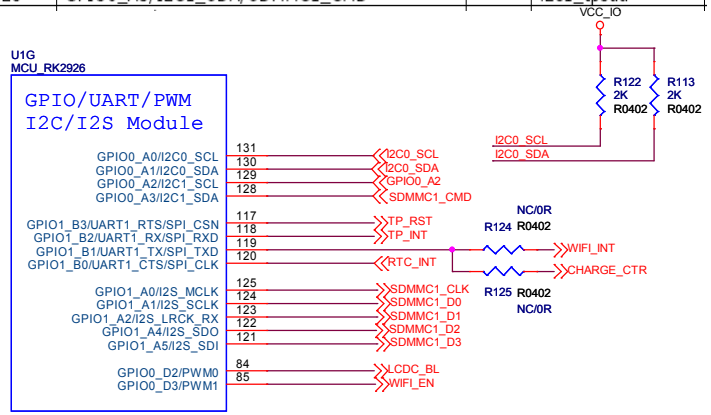

RK2926-G

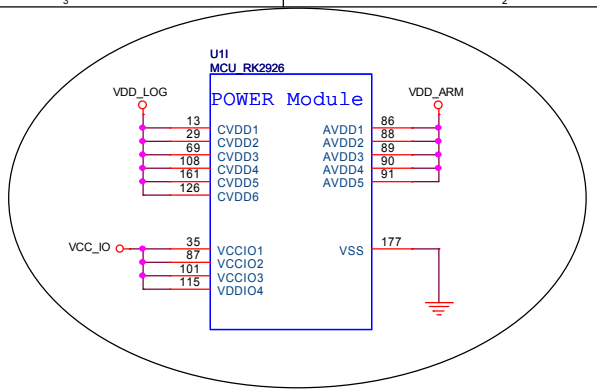

Note:
Place these filter capacitors under CPU.

RK2926-I

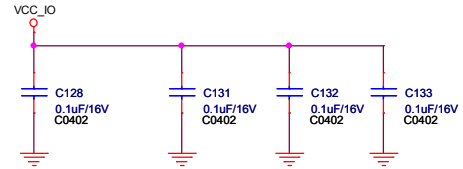

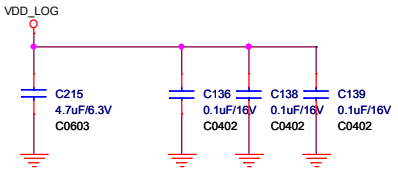

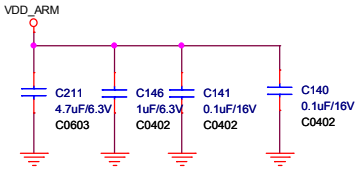

RK2926CORE POWER FILTER

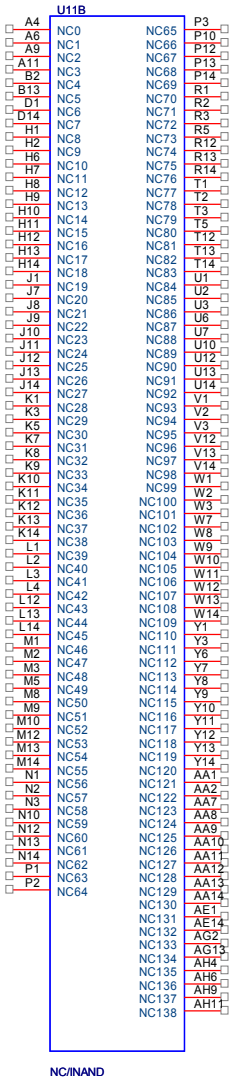

深圳市天和致远发展有限公司

Title	GPIO/POWER	
Size A3	File TH_AK47_V3	Rev V3
Date: Thursday, December 18, 2014	Sheet 10 of 15	

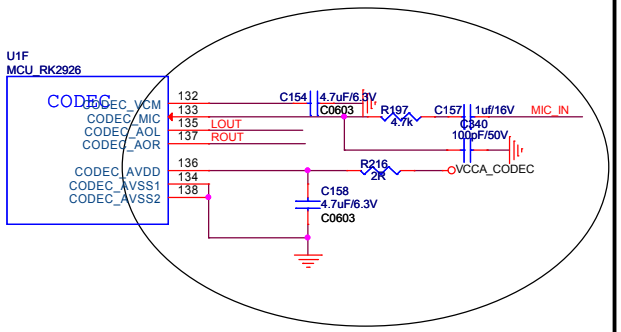

RK2926-F

MIC

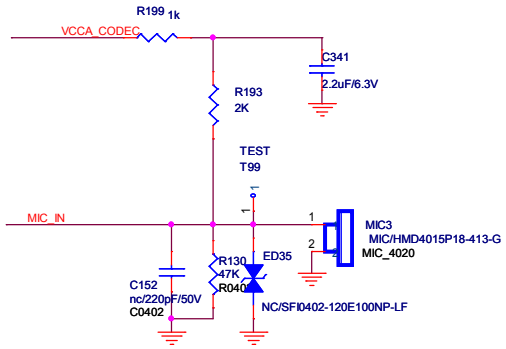

MIC

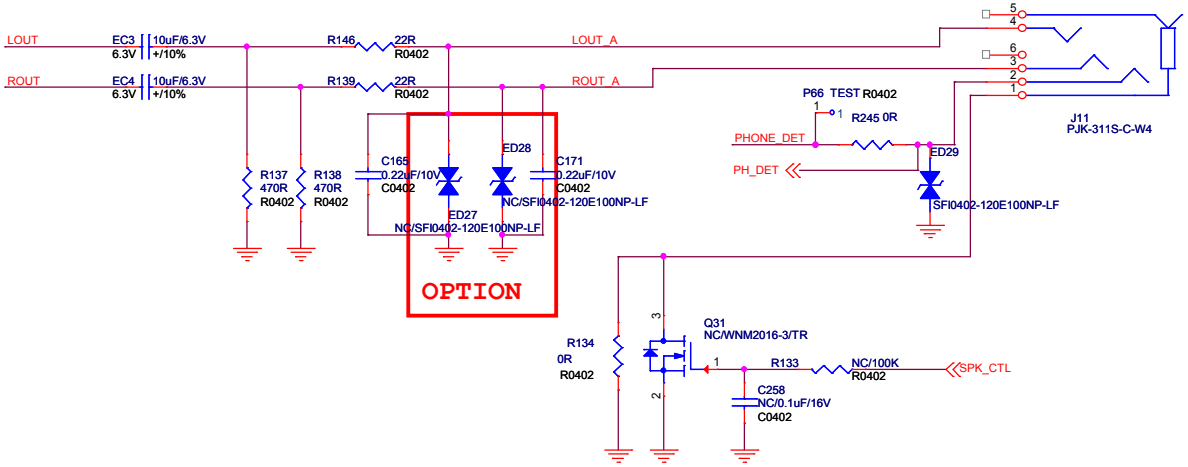

HEADPHONE

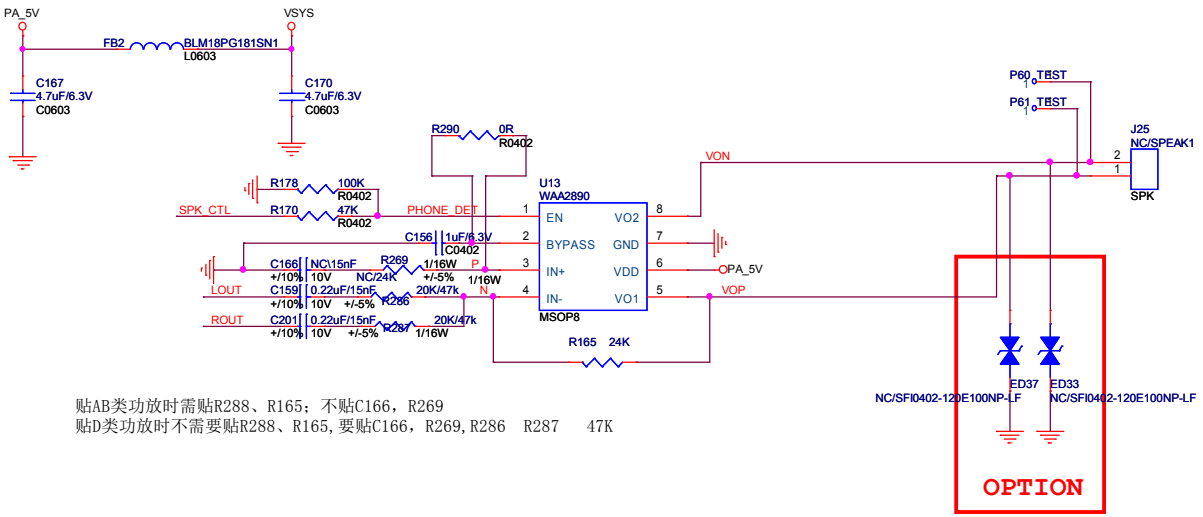

贴AB类功放时需贴R288、R165；不贴C166，R269
贴D类功放时不需要贴R288、R165，要贴C166，R269，R286　R287　47K

SPEAKER DRIVER

深圳市天和致远发展有限公司

Title	AUDIO	
Size A3	File TH_AK47_V3	Rev V3
Date: Monday, December 22, 2014	Sheet 11 of 15	

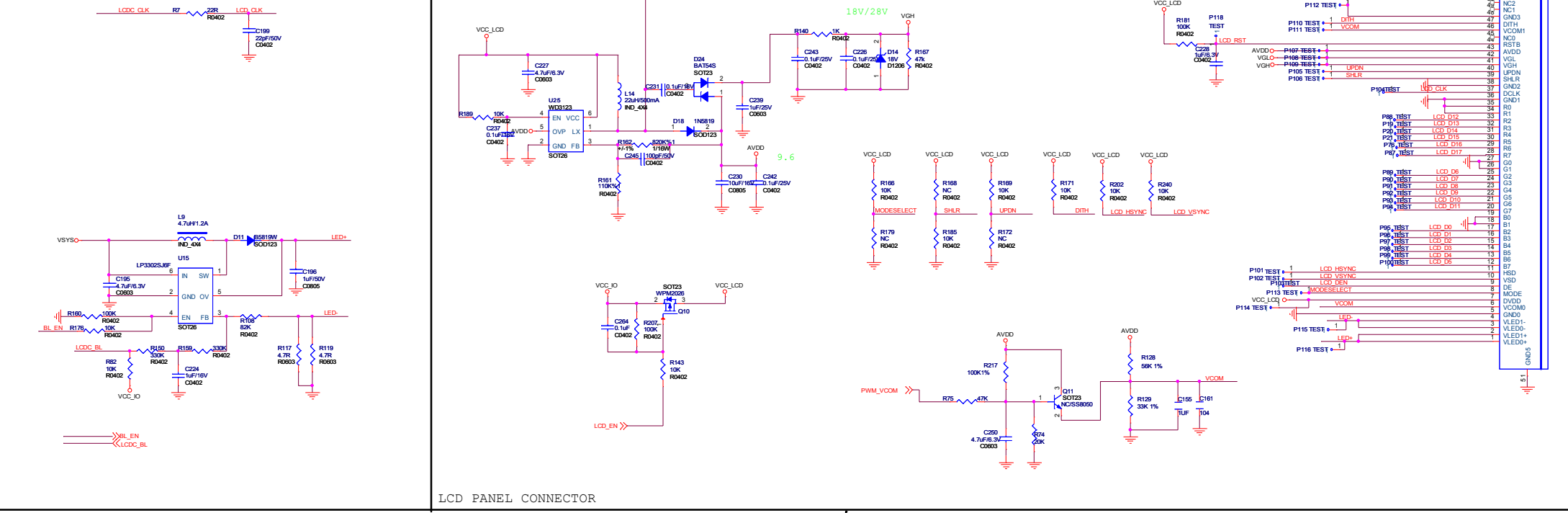

LCD PANEL CONNECTOR

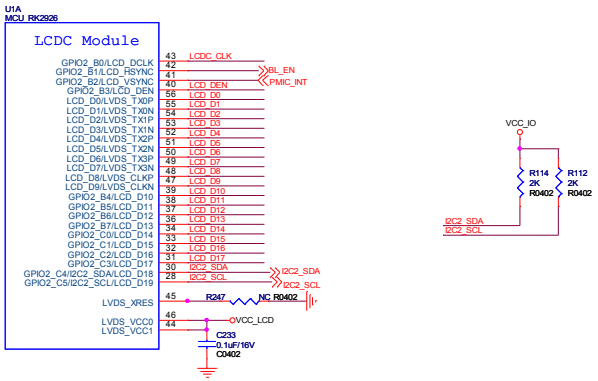

RK2926-A

Correspondence between LCDC DATA and RGB			
LCDC_D0	B2	LCDC_D9	G5
LCDC_D1	B3	LCDC_D10	G6
LCDC_D2	B4	LCDC_D11	G7
LCDC_D3	B5	LCDC_D12	R2
LCDC_D4	B6	LCDC_D13	R3
LCDC_D5	B7	LCDC_D14	R4
LCDC_D6	G2	LCDC_D15	R5
LCDC_D7	G3	LCDC_D16	R6
LCDC_D8	G4	LCDC_D17	R7

TOUCH PANEL CONNECTOR

深圳市天和致远发展有限公司

Title	LCD panel/Touch Panel	
Size: A2	File: TH_AK47_V3	Rev: V3
Date: Monday, December 22, 2014	Sheet 12 of 15	

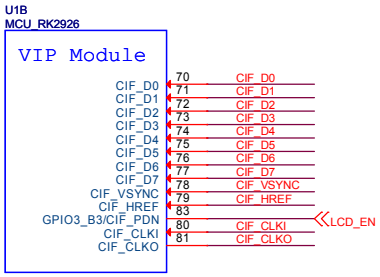

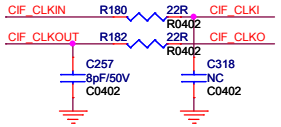

Note: 四个器件，根据调试结果，可选择是否NC。

RK2926-B

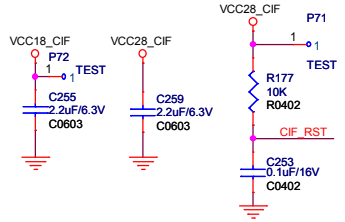

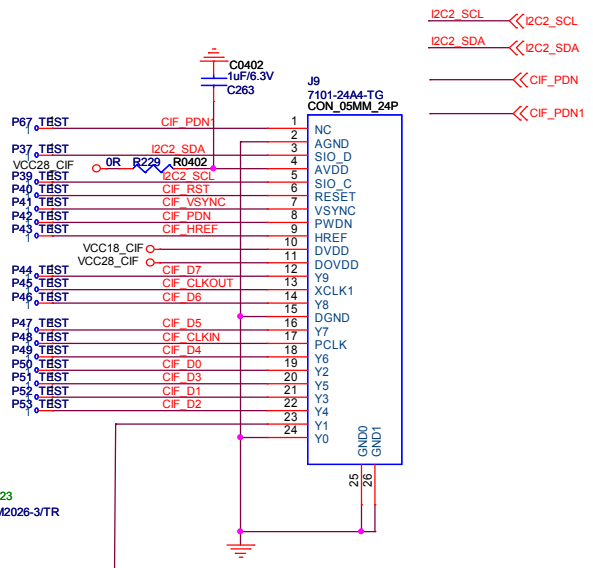

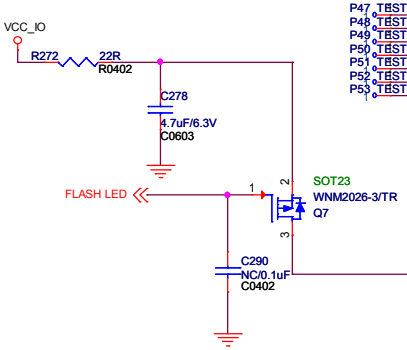

FRONT&REAR CAMERA

KEY BAORD

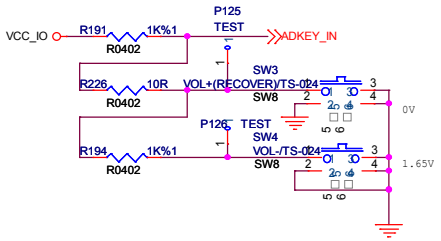

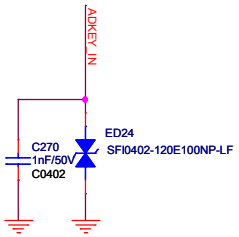

When the system power on, the Adkey_in level is 0V,

3D G-Sensor

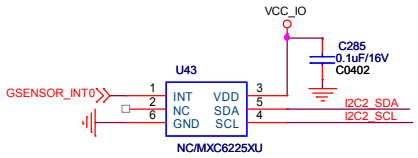

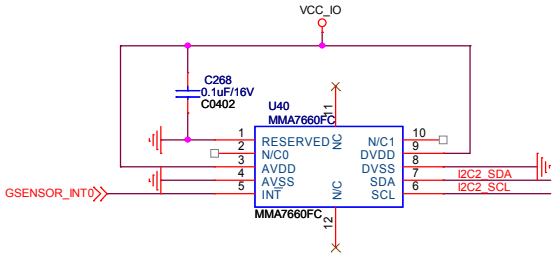

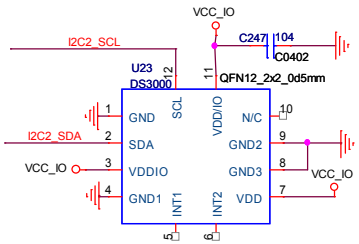

Note:
The first pin of G-sensor must be place on the lower left corner of PCB.

深圳市天和致远发展有限公司

Title	Camera/G_Sensor/Key	
Size A3	File TH_AK47_V3	Rev V3
Date: Tuesday, December 16, 2014	Sheet 13 of 15	

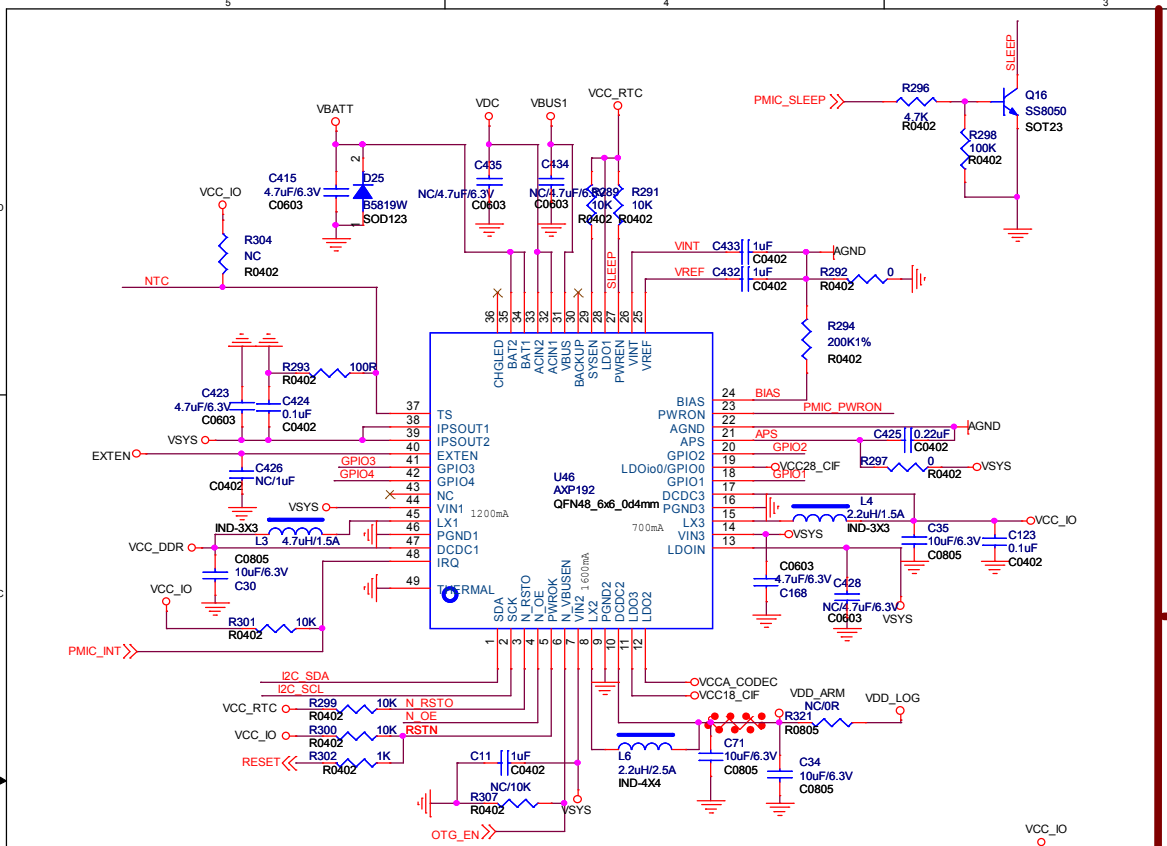

DC IN

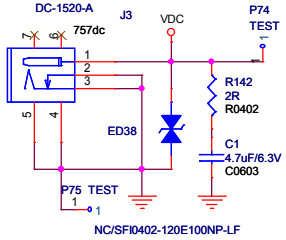

Note:
Please use a 5V DC.

PCB POWER WIRE WIDTH INDICATE

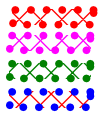

above 80 miles
above 50 miles
above 30 miles
above 12 miles
Under needs

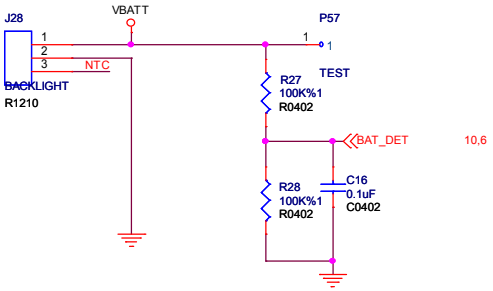

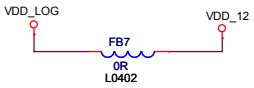

Note: Please use a 1.5A or above power supply IC.

EXTEN 可作为外部增加电源模块的 EN 信号，并带有时序管理。

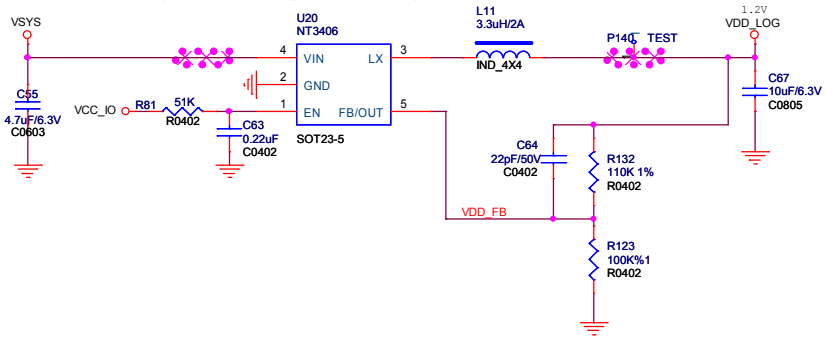

主控需增加此IO

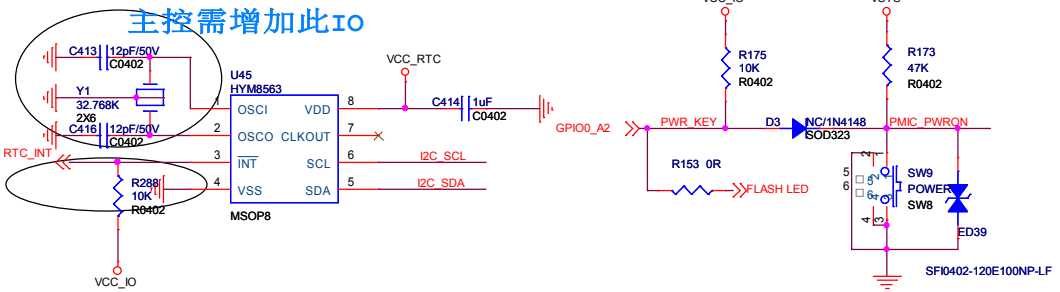

Rockchip 瑞芯微电子	福州瑞芯微电子有限公司
Title: Power-RK818	
File: 86V-2926	REV: V0.1
Create Date: Sunday, September 28, 2014	Page Num: 13
Modify Date: Thursday, December 18, 2014	Page Total: 29

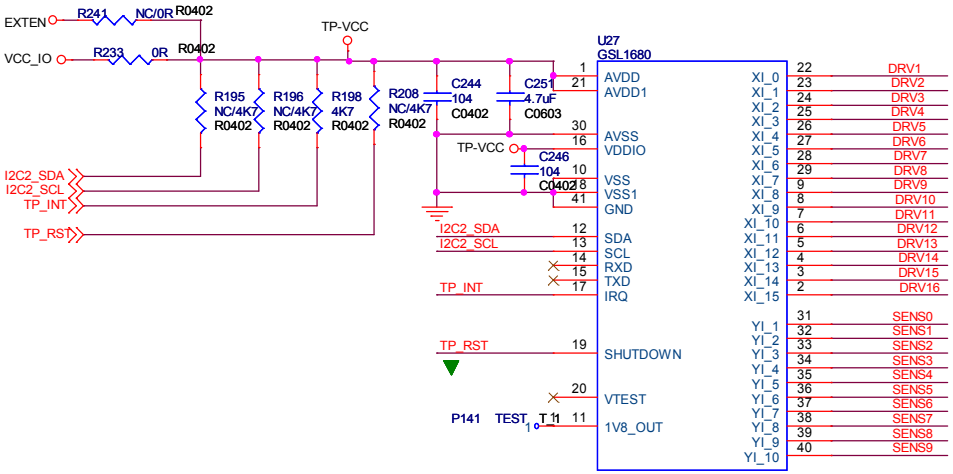

TOUCH PANEL CONNECTOR

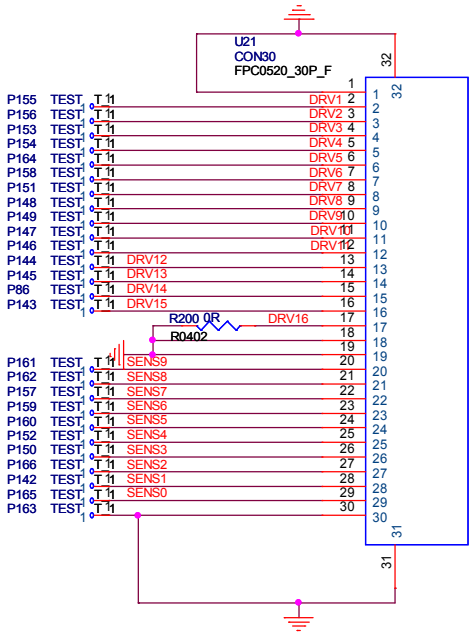

TOUCH PANEL CONNECTOR

深圳市天和致远发展有限公司

Title: TP		
Size: B	File: TH_AK47_V3	Rev: V3
Date: Thursday, December 18, 2014	Sheet 14 of 15	

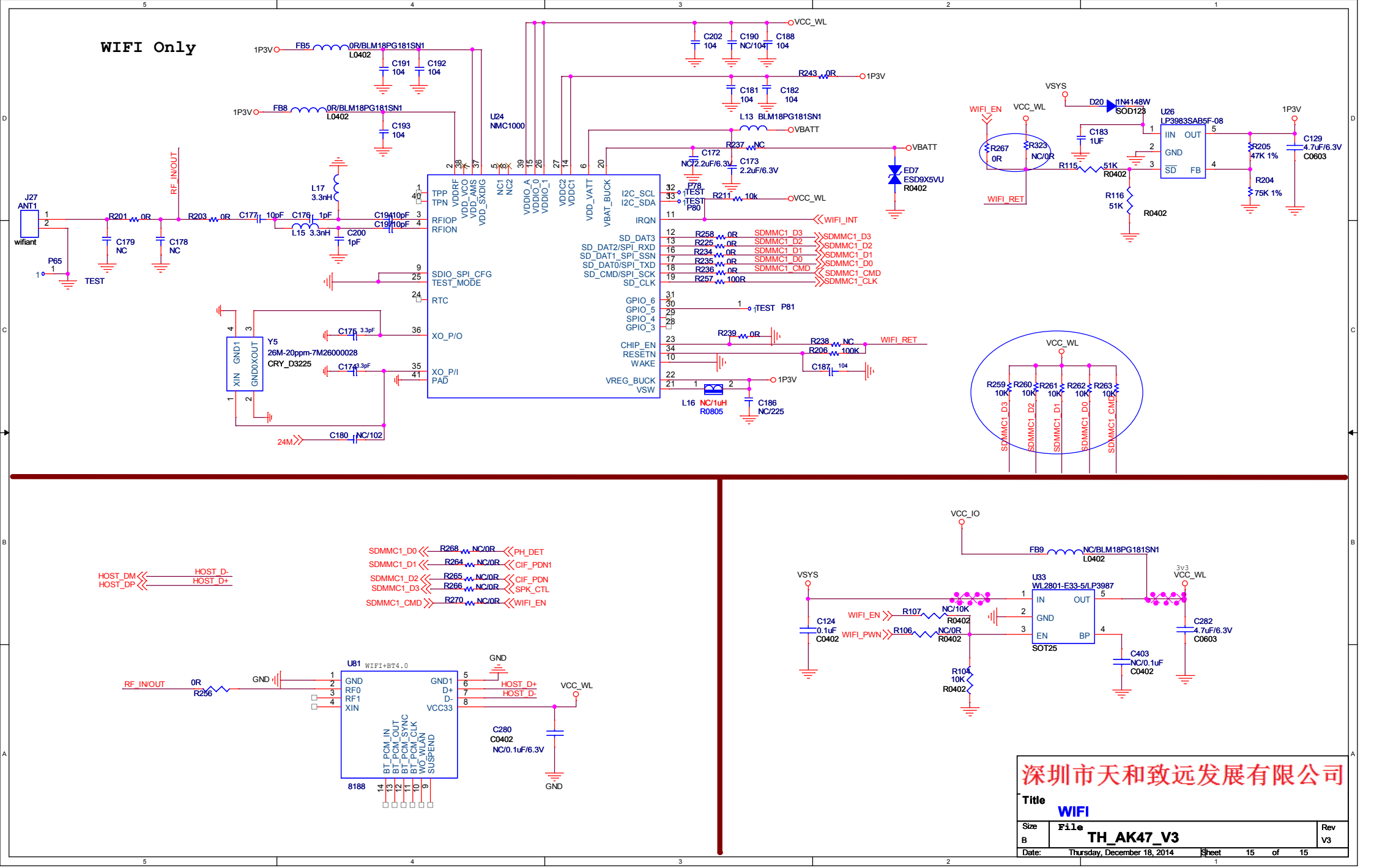
WIFI Only
U24
NMC1000
U26
LP3983SAB5F-08
U33
WL2801-E33-5/LP3987
SOT25
U81
WIFI+BT4.0
8188
Y5
26M-20ppm-7M26000028
CRY_D3225
J27
ANT1
wifiant
VCC_WL
VBATT
VSYS
VCC_IO
1P3V
WIFI_EN
WIFI_RET
WIFI_INT
WIFI_PWN
HOST_DM
HOST_DP
HOST_D-
HOST_D+
PH_DET
CIF_PDN1
CIF_PDN
SPK_CTL
RF_IN/OUT
GND
TEST
24M
SDMMC1_D0
SDMMC1_D1
SDMMC1_D2
SDMMC1_D3
SDMMC1_CMD
SDMMC1_CLK
SD_DAT3
SD_DAT2/SPI_RXD
SD_DAT1_SPI_SSN
SD_DAT0/SPI_TXD
SD_CMD/SPI_SCK
SD_CLK
GPIO_6
GPIO_5
SPIO_4
GPIO_3
CHIP_EN
RESETN
WAKE
VREG_BUCK
VSW
SDIO_SPI_CFG
TEST_MODE
RTC
XO_P/O
XO_P/I
PAD
TPP
TPN
RFIOP
RFION
VDDRF
VDD_VCO
VDD_AMS
VDD_SXDIG
NC1
NC2
VDDIO_A
VDDIO_0
VDDIO_1
VDDC2
VDDC1
VDD_VATT
VBAT_BUCK
I2C_SCL
I2C_SDA
IRQN
GND1
D+
D-
VCC33
BT_PCM_IN
BT_PCM_OUT
BT_PCM_SYNC
BT_PCM_CLK
WO_WLAN
SUSPEND
FB5 0R/BLM18PG181SN1 L0402
FB8 0R/BLM18PG181SN1 L0402
FB9 NC/BLM18PG181SN1 L0402
L13 BLM18PG181SN1
L16 NC/1uH R0805
L17 3.3nH
L15 3.3nH
ED7 ESD9X5VU R0402
D20 1N4148W SOD123
R115 51K R0402
R116 51K R0402
R205 47K 1%
R204 75K 1%
C129 4.7uF/6.3V C0603
C280 C0402 NC/0.1uF/6.3V
C282 4.7uF/6.3V C0603
C124 0.1uF C0402
C403 NC/0.1uF C0402
R104 10K R0402
R107 NC/10K R0402
R106 NC/0R R0402
R256 0R
R268 NC/0R
R264 NC/0R
R265 NC/0R
R266 NC/0R
R270 NC/0R
R259 10K
R260 10K
R261 10K
R262 10K
R263 10K
R267 0R
R323 NC/0R
R211 10k
R238 NC
R206 100K
R239 0R
R257 100R
R258 0R
R225 0R
R234 0R
R235 0R
R236 0R
R243 0R
R237 NC
C172 NC/2.2uF/6.3V
C173 2.2uF/6.3V
C181 104
C182 104
C202 104
C190 NC/104
C188 104
C191 104
C192 104
C193 104
C179 NC
C178 NC
C200 1pF
C175 3.3pF
C174 3.3pF
C180 NC/102
C186 NC/225
C187 104
C183 1UF
R201 0R
R203 0R
C177 10pF
C176 1pF
C194 10pF
C197 10pF
P65
P78
P80
P81
TEST
深圳市天和致远发展有限公司
Title
WIFI
Size
B
File
TH_AK47_V3
Rev
V3
Date: Thursday, December 18, 2014
Sheet 15 of 15