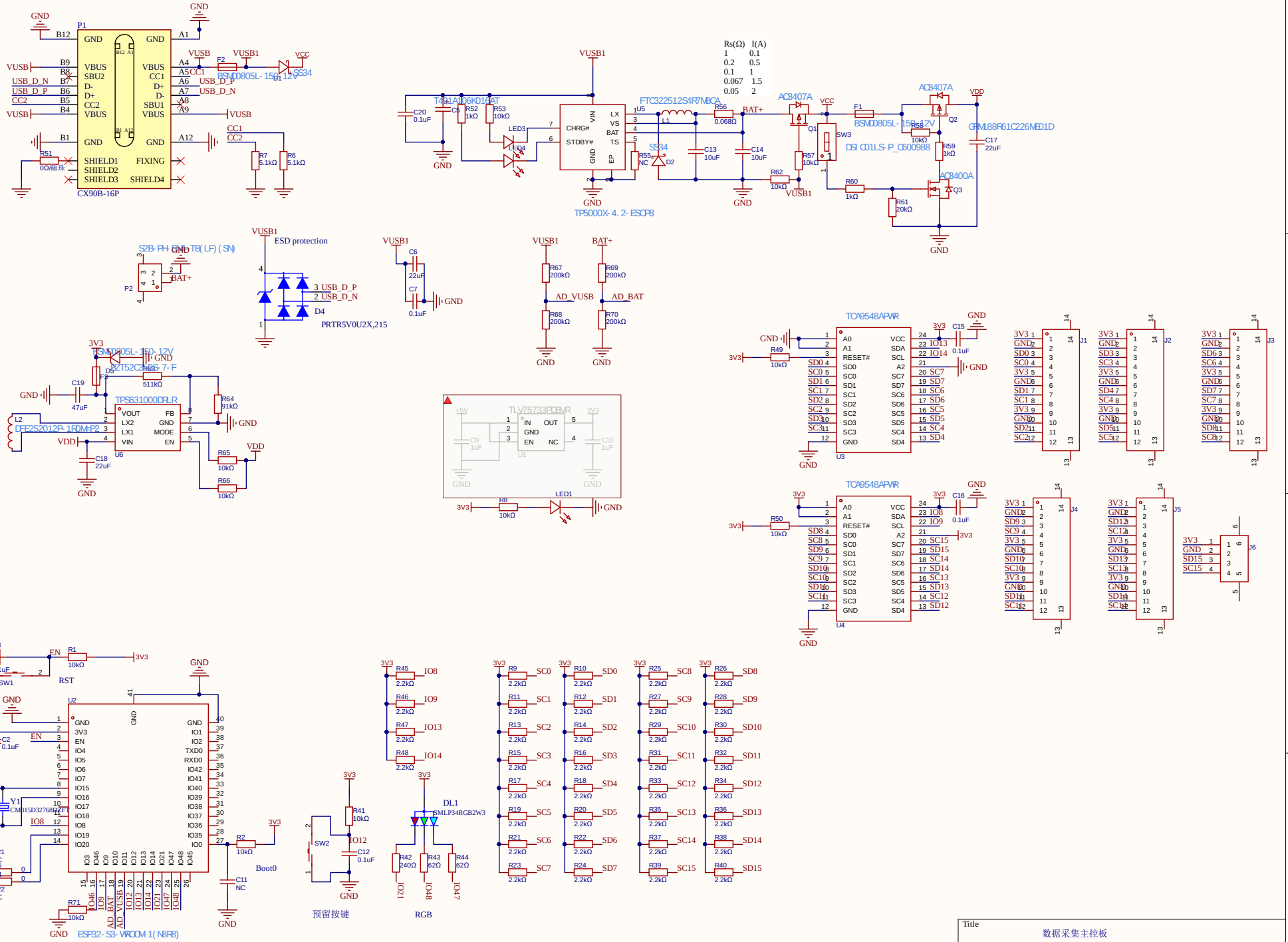

Title	数据采集主控板	
Size A3	Number	Revision V1.0
Date: 2026/4/20	Sheet of	
File: D:\SCZK_Project_260410\SCZK.SchDoc	Drawn By:	

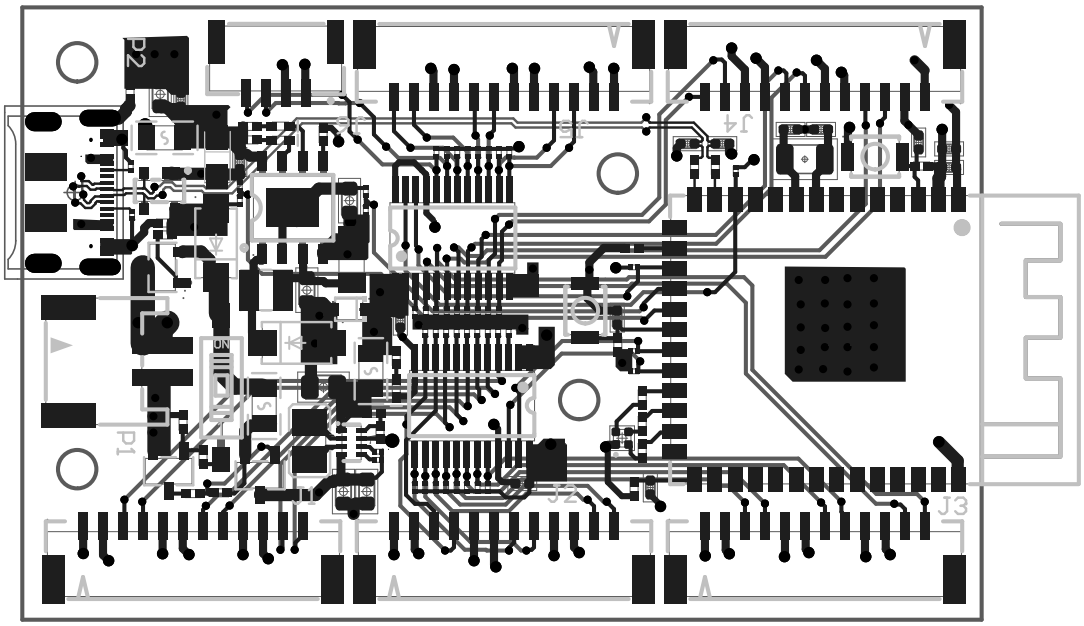
P2
P1
J4
J2
J3

Board Stack Report