Example of Modeling of Positioning System Driven by DC Motor

(直流电机驱动定位系统的建模实例)

Example

•Media Advance System in InkJet Printers

The figure on the right shows the media advance system of a typical inkjet printer. The objective of the system is to precisel and quickly position the media such that ink droplets can be precisely "dropped" on to the media to form "nice looking" images. The system is driven by a DC motor through two sets of gear trains. You, the "new kid" on the development team is given the task of specifying a motor and design the control system that will achieve the desirable performance. Sometime your manager will also walk by your desk and ask you if certain performance is achievable. How would you start your first engineering project?

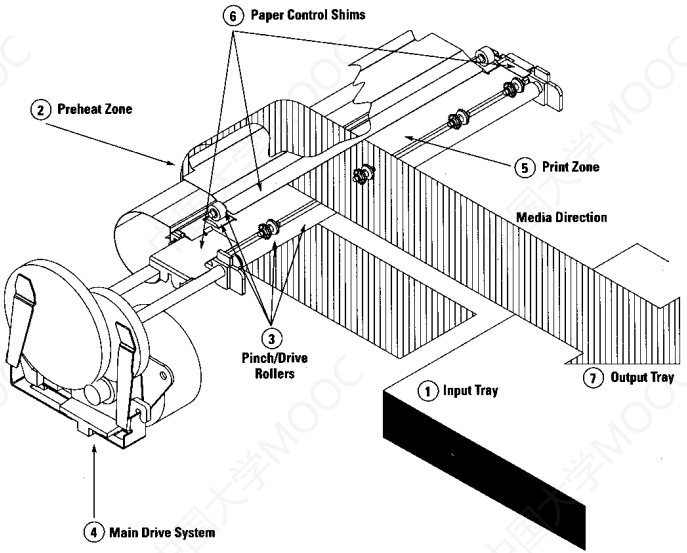

(喷墨打印机媒体推进系统：右图所示是一个典型喷墨打印机的媒体推进系统。系统的目标是使媒体进行精确快速的定位以便墨滴能够被精确的喷到媒体上来形成好看的图片。系统由直流电机通过两套齿轮来驱动。你作为年轻的工程师，接受任务是确定电机和设计控制系统以满足上述期望性能。有时候，你的经理会来到你面前问你某些性能是否能实现。你如何开始第一个工程设计的任务?)

Example

- **Schematic (原理图)**

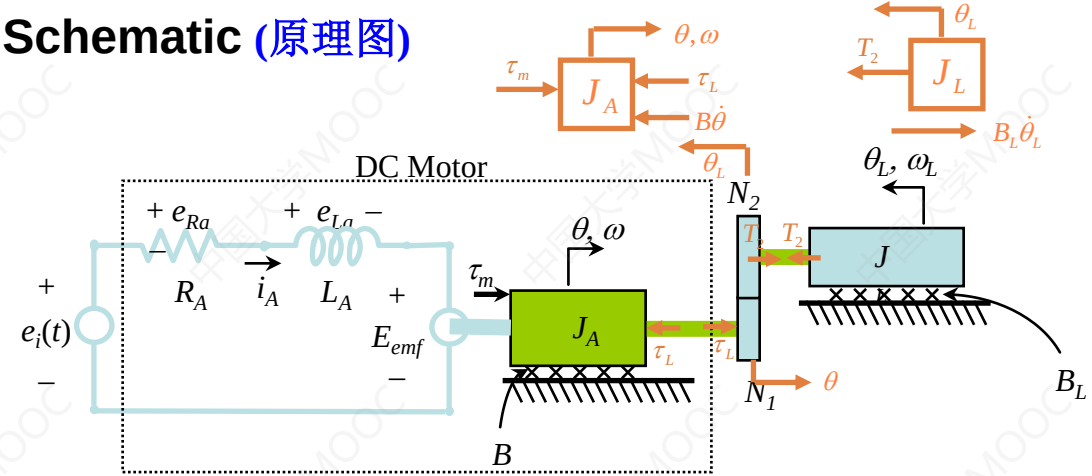

Assumptions (假设): Gears and shafts are rigid and massless **(齿轮和轴都是刚性的且无质量)**

- **Block diagram of the load inertia (负载惯性方框图):**

$$J_L\ddot{\theta}_L = T_2 - B_L\dot{\theta}_L$$

$$\Rightarrow (J_L s^2 + B_L s)\theta_L(s) = T_2(s)$$

$$\Downarrow$$

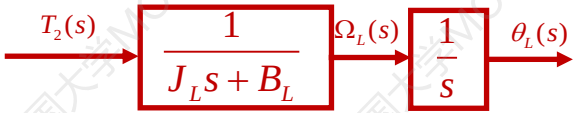

- **Block diagram of the gear train (齿轮传动方框图):**

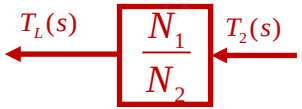

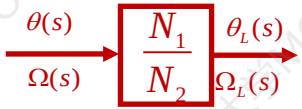

Example

•**Block diagram of overall system (整个系统的方框图):**

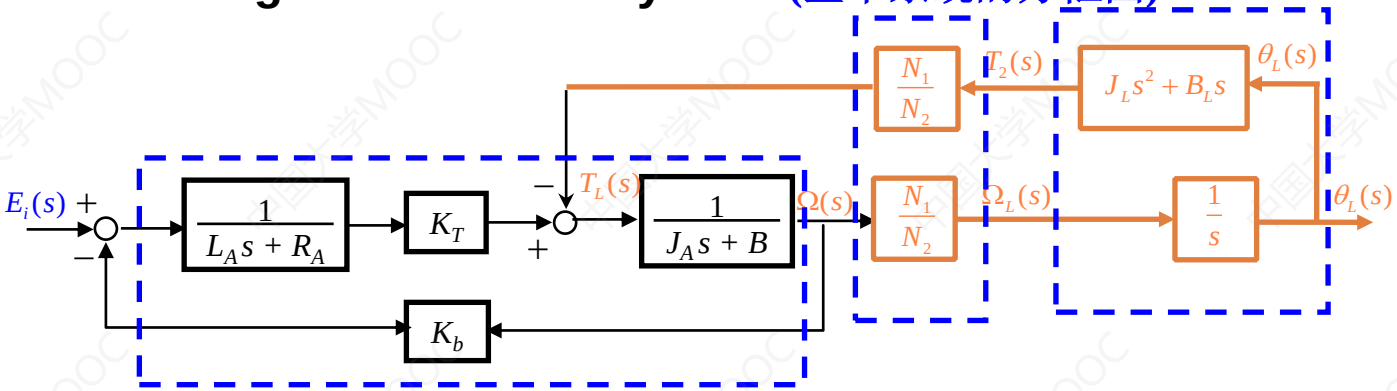

•**Reduce mechanical portion of the block diagram (方框图的机械部分化简):**

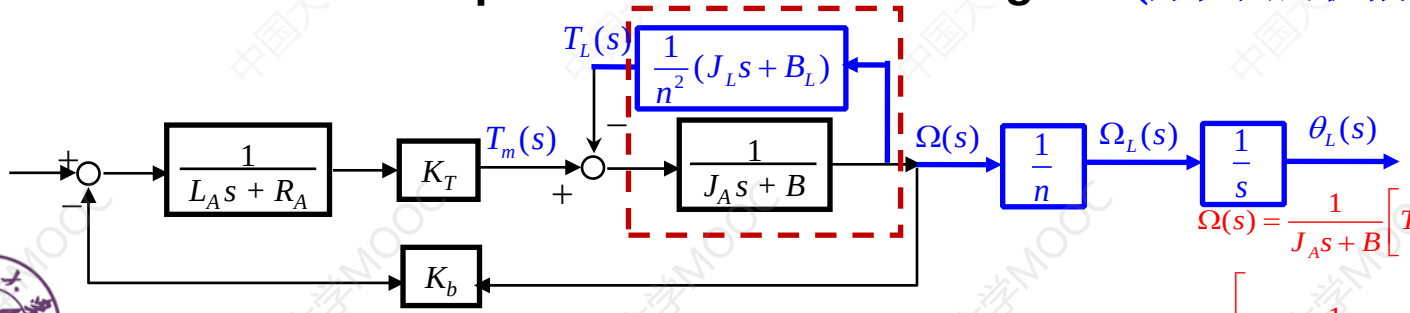

$$n = \frac{N_2}{N_1}$$

$$\Omega(s) = \frac{1}{J_A s + B}\left[T_m(s) - \frac{1}{n^2}(J_L s + B_L)\Omega(s)\right]$$

$$\Rightarrow \left[\underbrace{\left(J_A + \frac{1}{n^2}J_L\right)}_{J_E} s + \underbrace{\left(B + \frac{1}{n^2}B_L\right)}_{B_E}\right]\Omega(s) = T_m(s)$$

Example

- **Simplified block diagram (简化的方框图):**

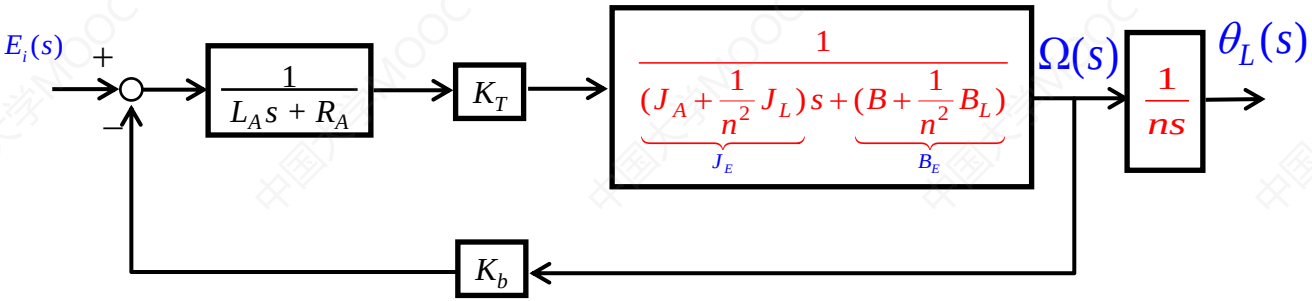

- **Transfer Function from input voltage $E_i(s)$ to angular position of the load $q(s)$ (从输入电压到负载角度的传递函数）:**

$$G_{E_i\theta}(s) = \frac{\theta_L(s)}{E_i(s)} = \frac{1}{ns}\frac{K_T}{L_A J_E s^2 + (B_E L_A + R_A J_E)s + (R_A B_E + K_b K_T)}$$

Q: Is this system stable ? (这个系统稳定吗)

Not stable as it has one pole at the origin (不稳定，因为系统有一个极点在原点)

Q: What command (voltage) would you use to move the roller's angular position by, say 60° ? (需要什么电压信号能使电机转动到一定角度，如60°)

Cannot do it using open-loop control! (开环控制不能做到)