Modeling of Hydraulic (Fluid) Systems – Part 2

(流体系统的建模2)

Modeling Steps

- **Understand System Function and Identify Input/Output Variables (理解系统功能和确定输入/输出变量)**
- **Draw Simplified Schematics Using Basic Elements (画出由基本元件组成的系统简化原理图)**
- **Develop Mathematical Model (建立数学模型)**
  - Label Each Element and the Corresponding Pressures (标出每个元件和相应的压力).
  - Label Each Node and the Corresponding Flow Rates (标出每个节点和相应的流量).
  - Write Down the Element Equations for Each Element (写出每个元件的方程).
  - Apply Interconnection Laws (应用互联关系).
  - Check to make sure that the Number of Unknown Variables equals the Number of Equations (检查并确认未知变量个数等于方程个数).
  - Eliminate Intermediate Variables to Obtain Standard Forms (消去中间变量来获得标准形式)
- **Laplace Transform (拉氏变换)**
- **Block Diagrams (方框图)**

In Class Exercise

Derive the input/output model for the following fluid system. The pump supplies a constant pressure p_S to the system and we are interested in finding out the volumetric flow rate through the nozzle at the end of the pipe **(推导下列流体系统的输入/输出模型,泵给系统提供恒定压力p_S，而我们感兴趣的是管道末端流过阀口的流量).**

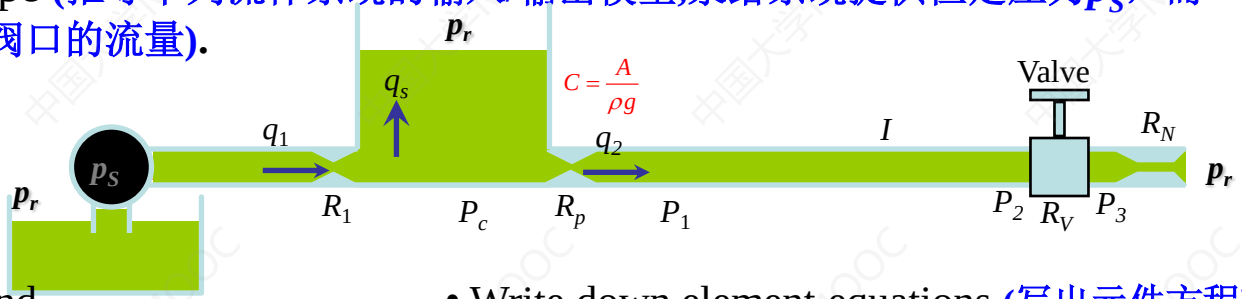

- Label the pressures at nodes and flow rates **(标出节点压力和流量)**

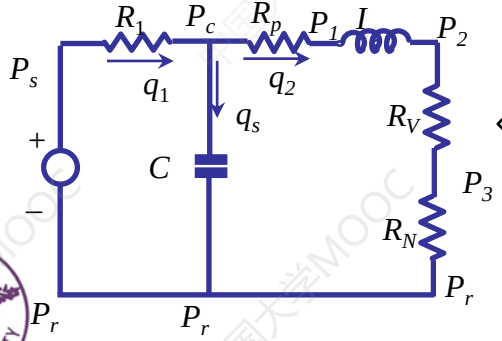

⇔

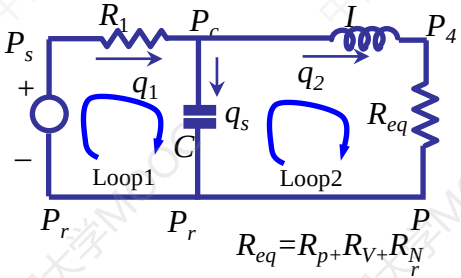

⇨

- Write down element equations **(写出元件方程):**

$$p_{sc} = R_1 q_1$$
$$q_s = C\dot{p}_{cr}$$
$$p_{c4} = I\dot{q}_2$$
$$p_{4r} = R_{eq} q_2$$
$$\text{Loop1: } p_{sr} = p_{sc} + p_{cr}$$
$$\text{Loop2: } p_{cr} = p_{c4} + p_{4r}$$
$$\text{Nodal: } q_1 = q_s + q_2$$

⇨

$$UVs: p_{sc}, q_1, q_s, p_{cr}, p_{c4}, q_2, p_{4r}$$
$$\text{Input: } p_{sr}$$
$$\text{Output: } q_2$$

In Class Exercise

- No. of unknowns and equations **(未知变量和方程个数)**

$$7\ \text{UVs} = 7\ \text{eqs}$$

- Interconnection laws **(互联关系):**

$$\begin{aligned}
p_{sc} &= R_1 q_1 \\
q_s &= C\dot{p}_{cr} \\
p_{c4} &= I\dot{q}_2 \\
p_{4r} &= R_{eq} q_2 \\
p_{sr} &= p_{sc} + p_{cr} \\
p_{cr} &= p_{c4} + p_{4r} \\
q_1 &= q_s + q_2
\end{aligned}
\quad \Rightarrow \quad
\begin{aligned}
p_{sr} &= R_1(C\dot{p}_{cr} + q_2) + I\dot{q}_2 + R_{eq} q_2 \\
p_{cr} &= p_{c4} + p_{4r} = I\dot{q}_2 + R_{eq} q_2
\end{aligned}$$

$$\Rightarrow p_{sr} = R_1 C(I\ddot{q}_2 + R_{eq}\dot{q}_2) + R_1 q_2 + I\dot{q}_2 + R_{eq} q_2$$

- Eliminate intermediate variables and obtain I/O model**(消去中间变量获得I/O模型)**

$$R_1 C I\ddot{q}_2 + (I + R_{eq} C R_1)\dot{q}_2 + (R_1 + R_{eq}) q_2 = p_{sr}$$

Motion Control of Hydraulic Cylinders

Hydraulic actuation is attractive for applications when large power is needed while maintaining a reasonable weight. Not counting the weight of the pump and reservoir, hydraulic actuation has the edge in power-to-weight ratio compared with other cost effective actuation sources. Earth moving applications (wheel loaders, excavators, mining equipment, ...) are typical examples where hydraulic actuators are used extensively. A typical motion application involves a hydraulic cylinder connected to certain mechanical linkages (inertia load). The motion of the cylinder is regulated via a valve that is used to regulate the flow rate to the cylinder. It is well known that such system chatters during sudden stop and start. Can you analyze the cause and propose solutions?

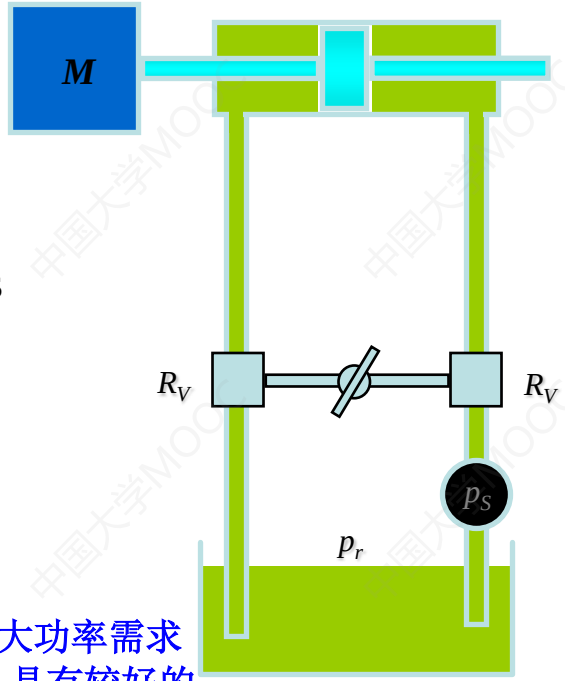

(液压缸系统的运动控制是很典型的机械-流体耦合系统。液压驱动常用在大功率需求的场合中，不考虑泵和蓄能器重量的话，液压驱动相比于其他驱动形式，具有较好的功率/重量比。液压驱动应用较广泛，如轮式装载机、挖掘机、采矿装备等都是典型的液压运动系统。典型的运动系统包括连接于某一惯性负载的液压缸,液压缸的运动通过阀来调节进出液压缸的流量来实现。这个系统在突然启动和停止时会有振荡产生。你能解释这种振荡产生的原因和解决方法吗？)

Coordinated Motion Control of Hydraulic Arm

Coordinated Motion Control of Hydraulic Arm

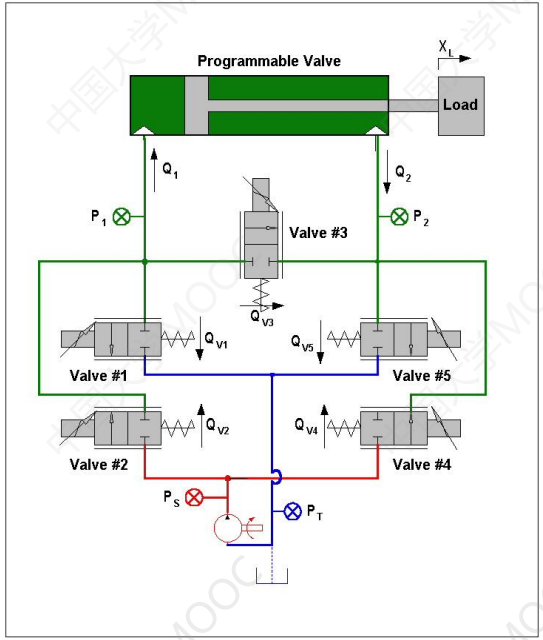

Novel Programmable Valves

Energy-Saving Control Experiments

Motion Control of Hydraulic Cylinders

Let's look at a simplified problem **(看如下的简化问题):**

q_{IN} : the input flow rate (the input) **(输入流量)**

v : the velocity of the mass (the output) **(负载速度).**

A: Cylinder bore area **(液压缸活塞面积)**

C: Cylinder chamber capacitance **(液压容腔的液容)**

B: Viscous friction coefficient between piston head and cylinder wall **(活塞和缸体之间的粘性摩擦系数).**

- **Derive the input/output model and transfer function between q_{IN} and V (推导输入/输出模型和q_{IN}与 V的传递函数).**
- **Draw the block diagram of the system (画出系统的方框图).**
- **Can this model explain the vibration problem noticed in practice when one suddenly closes the valve? (这个模型能解释实际中当阀突然关闭时出现的振动问题吗)**

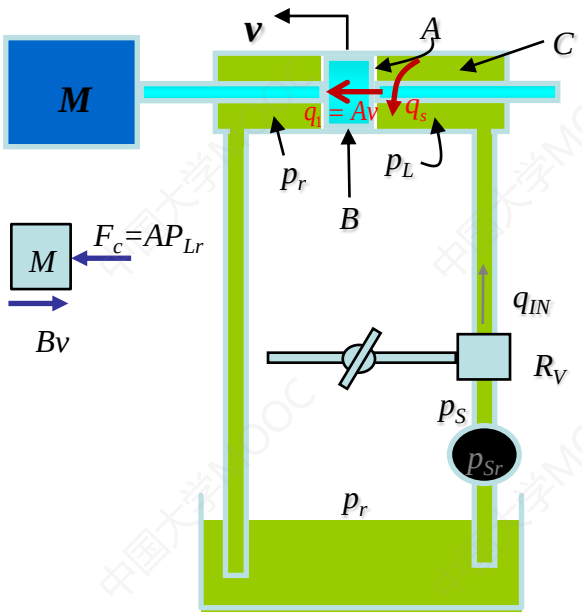

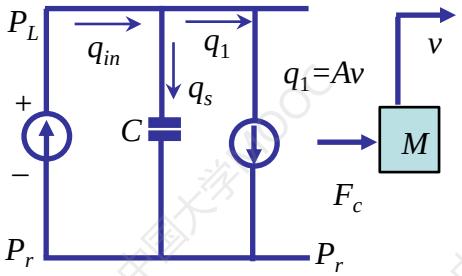

Motion Control of Hydraulic Cylinders

- **Element equations and interconnection equations (元件方程和互联方程):**

Hydraulic system (液压系统)	Hydraulic-Mechanical (液压-机械耦合)	Mechanical system (机械系统)
$q_s = C\dfrac{dp_{Lr}}{dt}$	$F_c = Ap_{Lr}$	$M\dot{v} = F_c - Bv$
$q_{in} = q_s + q_1$	$q_1 = Av$	

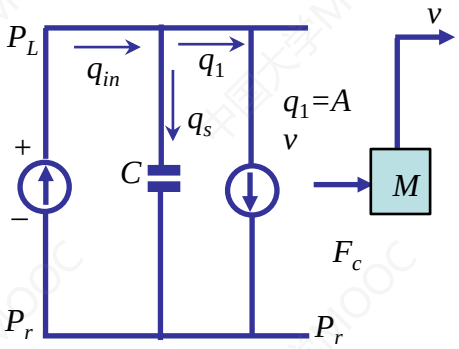

- **Take Laplace transforms (采用拉氏变换):**

$$Q_s(s) = CsP_{Lr}(s) \qquad F_c(s) = AP_{Lr}(s)$$

$$Q_{in}(s) = Q_s(s) + Q_1(s) \qquad Q_1(s) = AV(s)$$

$$MsV(s) + BV(s) = F_c(s)$$

- **Block diagram representation (方框图表示):**

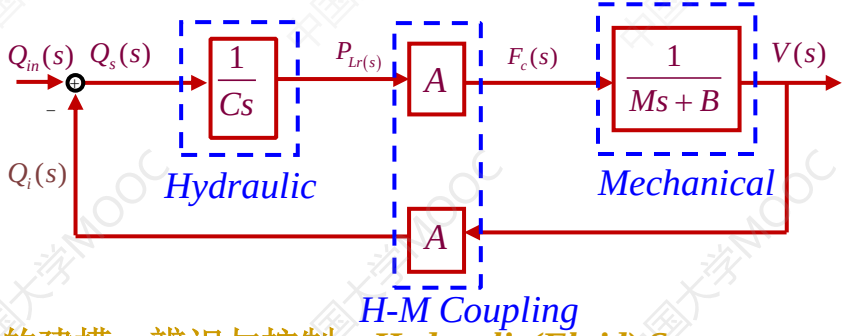

Motion Control of Hydraulic Cylinders

- **Transfer function between q_{IN} and V:**
（传递函数)

$$G(s)=\frac{V(s)}{Q_{in}(s)}=\frac{A}{MCs^2+BCs+A^2}=\frac{\overbrace{\frac{A}{MC}}^{K\omega_n^2}}{s^2+\underbrace{\frac{B}{M}}_{2\zeta\omega_n}s+\underbrace{\frac{A^2}{MC}}_{\omega_n^2}}$$

How would the velocity response look like if one suddenly opens the valve to reach constant input flow rate Q for some time T and suddenly closes the valve to stop the flow ?(如果在某时突然打开阀门来获得恒定的输入流量和突然关闭阀门来停止流量,速度响应看起来会如何)

- **Analyze the transfer function** (分析传递函数):

In reality, large *M*, small *C*, reasonable *B*
(实际系统具有大的*M*,小的*C*和适中的*B*)

$\Rightarrow$

reasonable value for ω_n, very small ζ
(合理的ω_n,和非常小的ζ)

- ***Natural Frequency*** (自然频率): $\omega_n=\sqrt{\frac{A^2}{MC}}=\frac{A}{\sqrt{MC}}$

- ***Damping Ratio*** (阻尼比): $\zeta=\frac{\frac{B}{M}}{2\frac{A}{\sqrt{MC}}}=\frac{1}{2}\sqrt{\frac{C}{M}}\frac{B}{A}$

- ***Steady State Gain*** (静态增益): $K=\frac{\frac{A}{MC}}{\frac{A^2}{MC}}=\frac{1}{A}$

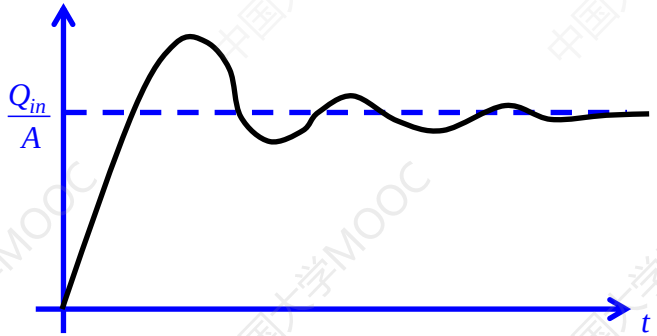

Summary

- **Modeling of Coupling System (耦合系统建模)**
  - Basic subsystems (基本子系统)
  - Coupling parts (耦合部分)
  - Integrated modeling (综合建模)
  - DC-Motor, Mechanical-Hydraulic System, Electro-Hydraulic System