HOMEWORK SET 1

Modeling, Identification and Control of Mechatronic Systems **Fall 2022**
OUT: 11/09/22 DUE: 18/09/22

Use separate sheets to answer each problem with clear problem number, figures, equations and illustrations. **Please submit the answer sheets together with Matlab codes and Simulink model (Matlab2015a Version or below)** used in your problem analysis when you hand in your homework.

PROBLEM #1(50%)

The ECP plant, shown in Figure 1.1 is designed to emulate a broad range of typical servo control applications. The Model 220 apparatus consists of a drive motor (servo actuator) which is coupled via a timing belt to a drive disk with variable inertia. Another timing belt connects the drive disk to the speed reduction (SR) assembly while a third belt completes the drive train to the load disk. The load and drive disks have variable inertia which may be adjusted by moving (or removing) brass weights. Speed reduction is adjusted by interchangeable belt pulleys in the SR assembly. Backlash may be introduced through a mechanism incorporated in the SR assembly, and flexibility may be introduced by an elastic belt[1] between the SR assembly and the drive disk. The drive disk moves one-for-one with the drive motor so that its inertia may be thought of as being collocated with the motor. The load inertia however will rotate at a different speed than the drive motor due to the speed reduction. Also, drive flexibility and/or backlash may exist between it and the drive motor and hence its inertia is considered to be non-collocated with the motors.

A disturbance motor connects to the load disk via a 4:1 speed reduction and is used to emulate viscous friction and disturbances at the plant output. A brake below the load disk may be used to introduce Coulomb friction. Thus **friction, disturbances, backlash, and flexibility** may all be introduced in a controlled manner. These effects represent non-ideal conditions that are present to some degree in virtually all physically realizable electromechanical systems.

All rotating shafts of the mechanism are supported by precision ball bearings. Needle bearings in the SR assembly provide low friction backlash motion (when backlash is desired).

High-resolution incremental encoders[2] couple directly to the drive θ_1 and load θ_2 disks providing position (and derived rate) feedback. The drive and disturbance motors are electrically driven by servo amplifiers and power supplies in the Controller Box. The encoders are routed through the Controller box to interface directly with the DSP board via a gate array that converts their pulse signals to numerical values.

The schematic of the plant with rigid drive belts is shown in Fig.1.2, in which T_D is the control input torque by the drive motor, and T_L is the disturbance (or load) torque generated by the load motor. For simplicity, assume that the Pulley's inertia J_p can be neglected, i.e., J_p=0. Based on the schematic, obtain the system dynamic model as follows

(1). Identify reference point and positive directions and draw FBD for each element shown in Fig.1.2.

(2). Write down all the elemental dynamic equations and interconnecting equations. Check to make sure that the number of equations is the same as the number of unknown variables.

(3). Combine equations to obtain an input/output model by eliminating intermediate variables. Obtain an input/output model or state-space model that relates the output θ_2 to the inputs T_D and T_L (i.e., $u = \begin{bmatrix} T_D \\ T_L \end{bmatrix}$).

You can write the state-space model as the following matrix form:

$$M\begin{bmatrix} \ddot{\theta}_1 \\ \ddot{\theta}_2 \end{bmatrix} + C\begin{bmatrix} \dot{\theta}_1 \\ \dot{\theta}_2 \end{bmatrix} + K\begin{bmatrix} \theta_1 \\ \theta_2 \end{bmatrix} = L\begin{bmatrix} T_D \\ T_L \end{bmatrix}$$

where M, C, K and L are 2×2 matrices.

(4) Establish the model of the ECP Emulator using s-function technique in Matlab/Simulink and obtain the step response of the system.

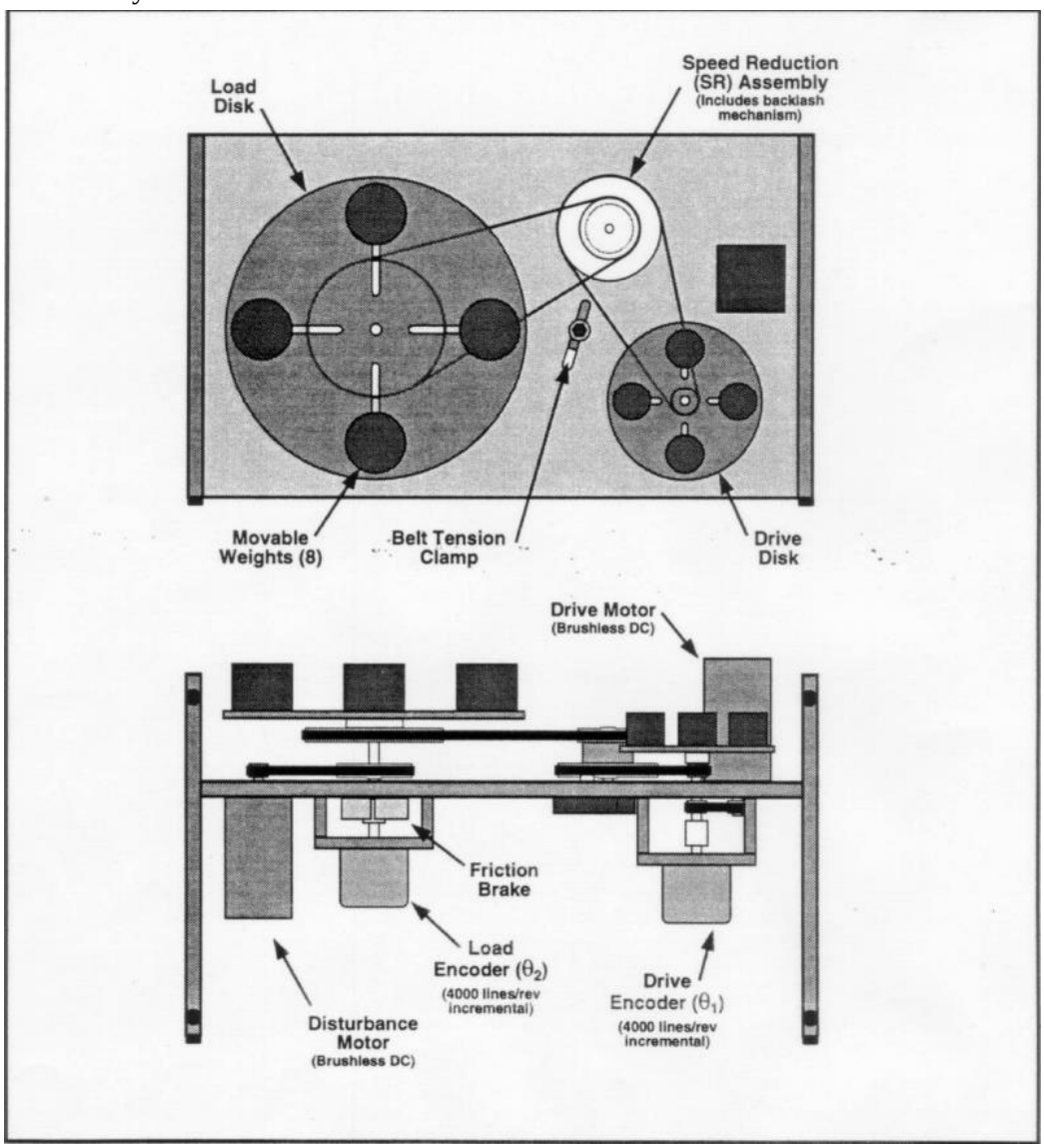

1.Either a "rigid" or flexible belt may be used between the SR assembly and the load disk.

2.4000 lines per revolution with 4X hardware interpolation provide 16,000 count per rev. resolution for control.

Figure1 Emulator Apparatus

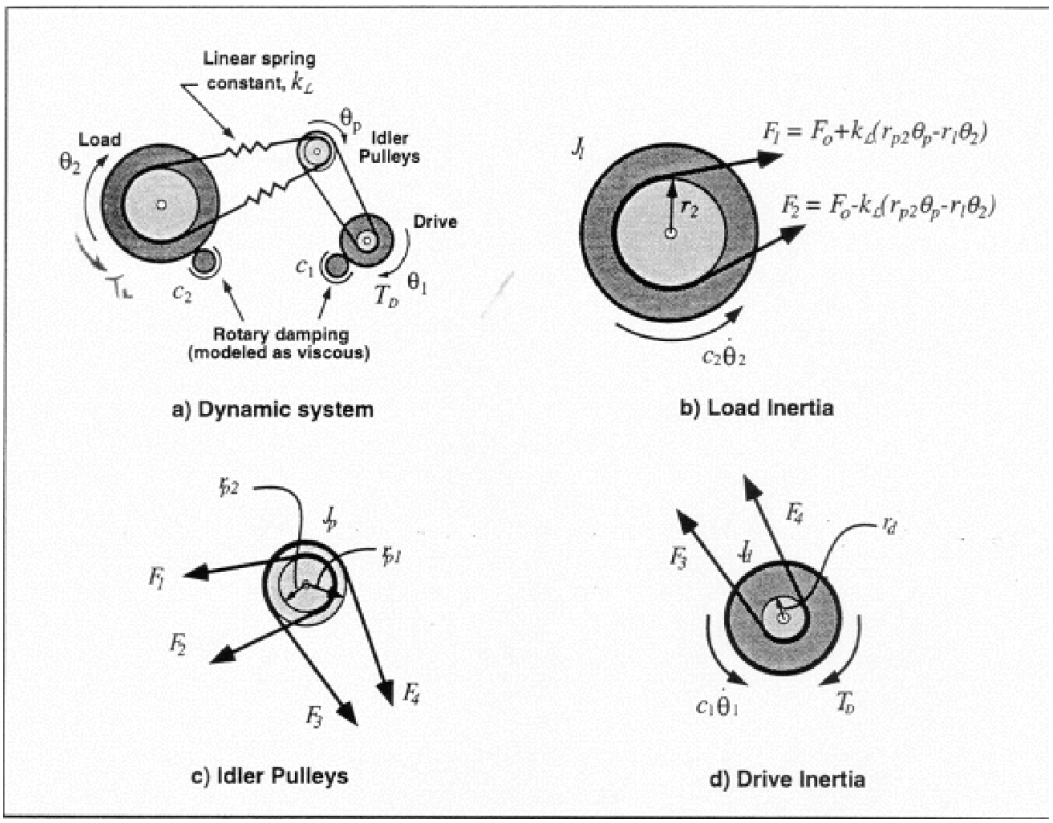

Figure 2 Schematic of ECP Plant with Rigid Belts

Table 1 The values of physical parameters

Symbol	Physical parameters	Unit	Value
J_D	Drive motor's inertia	kg.m^2	0.00004
C_1	Viscous damping of drive motor	N/(m/s)	0.00005
r_d	Ratio of drive disk	kg.m^2	0.01
J_L	Load disk's inertia	kg.m^2	0.0003
C_2	Viscous damping of drive motor	N/(m/s)	0.00036
r_L	Ratio of load disk	m	0.03
r_{P1}	Ratio of large pulley	m	0.024
r_{P2}	Ratio of small pulley	m	0.012
J_p	Pulley's inertia	kg.m^2	0
K_L	Stiffness of the belt	N/m	500

Solutions:

(1) The FBDs are shown below:

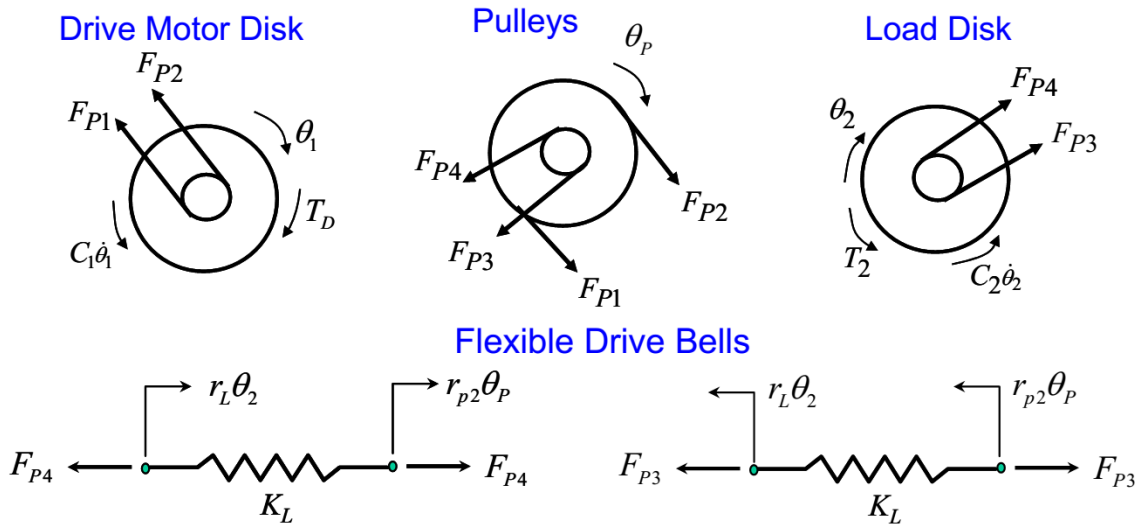

(2)For simplicity, let T_{pd} represent the equivalent torque on the drive shaft due to the belt, i.e.,

$$T_{PD} = r_d(F_{P2} - F_{P1}) \tag{1}$$

and T_P be the equivalent torque transmitted to the pulley from the drive shaft, i.e.,

$$T_{P1} = r_{P1}(F_{P2} - F_{P1}) \tag{2}$$

Similarly, the equivalent torque on the pulley by the load side belt is

$$T_{P2} = r_{P2}(F_{P4} - F_{P3}) \tag{3}$$

and the equivalent torque transmitted to the load by the belt is

$$T_{PL} = r_L(F_{P4} - F_{P3}) \tag{4}$$

With these notations, the elemental and the interconnection equations are:

For Drive Disk:

$$J_D\ddot{\theta}_1 = T_D - C_1\dot{\theta}_1 - T_{PD} \tag{5}$$

For rigid belt between drive shaft and the pulley

From (2.1) and (2.2):

$$\frac{T_{P1}}{T_{PD}} = g_{r1},\ g_{r1} = \frac{r_{p1}}{r_d} \quad T_{PD} \longrightarrow \boxed{\frac{r_{P1}}{r_d}} \longrightarrow T_{P1},$$

$$\text{Noting kinematics: } \frac{\theta_1}{\theta_P} = g_{r1} \quad \theta_1 \longleftarrow \boxed{\frac{r_{P1}}{r_d}} \longleftarrow \theta_P, \tag{6}$$

which functions like a gear set to scale up the torque while reducing speed.

For Pulleys: $$0 = J_P\ddot{\theta}_P = T_{P1} - T_{P2} \tag{7}$$

For flexible belts between the pulley and the load:

$$\left.\begin{aligned} F_{P4} &= K_L(r_{P2}\theta_P - r_L\theta_2) \\ F_{P3} &= K_L(-r_{P2}\theta_P + r_L\theta_2) \end{aligned}\right\} \Rightarrow \left\{\begin{aligned} T_{P2} &= r_{P2}.2K_L(r_{P2}\theta_P - r_L\theta_2) \\ T_{PL} &= r_L.2K_L(r_{P2}\theta_P - r_L\theta_2) \end{aligned}\right. \tag{8}$$

For the load disk:

$$J_L\ddot{\theta}_2 = T_{PL} - c_2\dot{\theta}_2 - T_L \tag{9}$$

Thus overall, 7 unknown variables: θ_1, T_{PD}, θ_P, T_{P1}, T_{P2} , T_{PL}, θ_2,

7 equations: 1 equations from (5),
2 equations from (6),
1 equations from (7),
2 equations from (8),
1 equations from (9)

(3) **Matrix from**:

Eliminating 5 intermediate variables of θ_P, T_{PD}, T_{P1}, T_{P2}, T_{PL} from the 7 equations listed above, we obtain

$$J_d\ddot{\theta}_1 = T_D - c_1\dot{\theta}_1 - \frac{1}{g_{r1}} r_{P2}.2K_L\left(r_{P2}\frac{1}{g_{r1}}\theta_1 - r_L\theta_2\right)$$
$$J_L\ddot{\theta}_2 = r_L.2K_L\left(r_{P2}\frac{1}{g_{r1}}\theta_1 - r_L\theta_2\right) - c_2\dot{\theta}_2 - T_L \tag{10}$$

which can be put in the matrix form of

$$\underbrace{\begin{bmatrix} J_d & 0 \\ 0 & J_L \end{bmatrix}}_{M}\begin{bmatrix} \ddot{\theta}_1 \\ \ddot{\theta}_2 \end{bmatrix} + \underbrace{\begin{bmatrix} c_1 & 0 \\ 0 & c_2 \end{bmatrix}}_{C}\begin{bmatrix} \dot{\theta}_1 \\ \dot{\theta}_2 \end{bmatrix} + \underbrace{\begin{bmatrix} \frac{2K_L r_{P2}^{\ 2}}{g_{r1}^{\ 2}} & -\frac{2K_L r_{P2} r_L}{g_{r1}} \\ -\frac{2K_L r_{P2} r_L}{g_{r1}} & 2K_L r_L^{\ 2} \end{bmatrix}}_{K}\begin{bmatrix} \theta_1 \\ \theta_2 \end{bmatrix} = \underbrace{\begin{bmatrix} 1 & 0 \\ 0 & -1 \end{bmatrix}}_{L}\begin{bmatrix} T_D \\ T_L \end{bmatrix} \tag{11}$$

(13)

PROBLEM #2 (30%)

Consider an inertia load M driven by a double-rod hydraulic cylinder as shown in the following figure. The fluid inside the hydraulic cylinder has an area of A (the ram area of the rod). The cylinder has a fluid capacitance of C_1 for its forward chamber and a fluid capacitance of C_2 for its return chamber. The damping friction coefficient of the rod is B. A pressure pump system is used to supply a flow rate of input pressure p_s, which causes a forward flow q_1 into the hydraulic cylinder through a valve having a resistance of R_1 and a return flow of q_2 from the return chamber of the cylinder to the tank through a valve having a resistance of R_2. The goal is to determine the supplied pressure $p_{sr}(t) = p_s - p_r$ such that the inertia load M can be positioned at any desired position as we want. To accomplish this objective, we need to model the system first. The input is p_{sr} and the output is the displacement of the inertia load x.

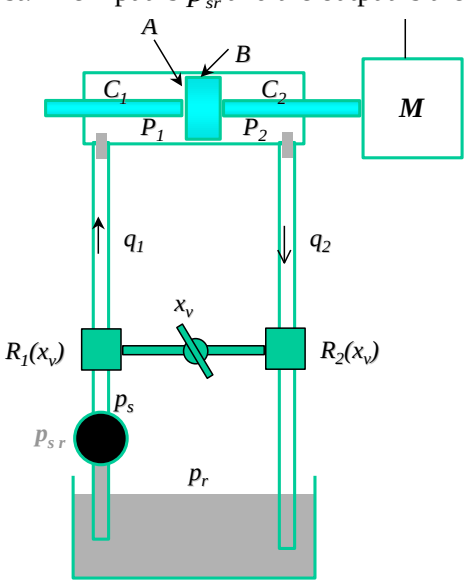

(A). Write down the elemental equations as well as interconnecting equations for the hydraulic subsystem, the cylinder, and the mechanical subsystem respectively.

(B). Transform the equations in (A) into algebraic equations in s-domain by using Laplace transform. Based on the transformed equations, draw the block diagram of the system. Indicate the hydraulic subsystem, the cylinder, and the mechanical subsystem on the block diagram.

(C). Obtain the transfer function from the input to the output.

(D). Is the system is stable? Can the system stay at a particular position by applying a constant supplied pressure p_{sr}?

Solution:

Electrical Analogy:

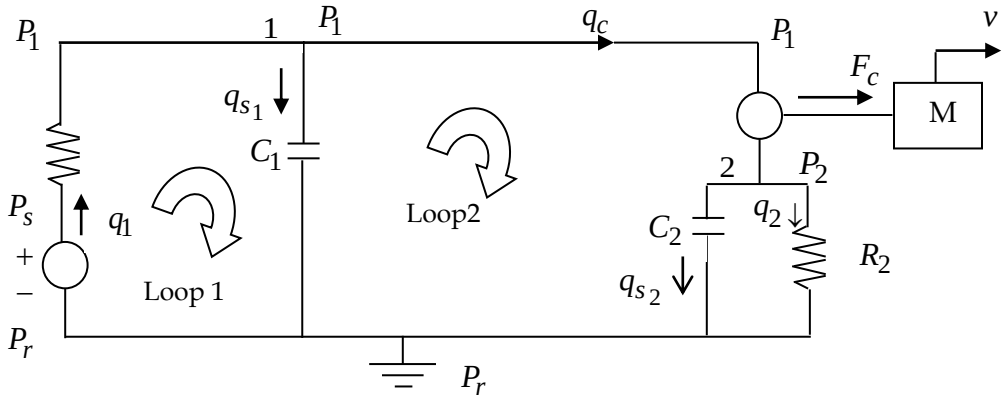

(A)

Elemental equations

Hydraulic:

$$p_{s1} = R_1 q_1$$

$$q_{s1} = C_1 \frac{dp_{1r}}{dt}$$

$$q_{s2} = C_2 \frac{dp_{2r}}{dt}$$

$$p_{2r} = R_2 q_2$$

$$p_{sr} - p_{s1} - p_{1r} = 0 \quad \text{(loop 1)}$$

$$p_{1r} - p_{12} - p_{2r} = 0 \quad \text{(loop 2)}$$

$$q_1 = q_c + q_{s1} \quad \text{(node 1)}$$

$$q_c = q_2 + q_{s2} \quad \text{(node 2)} \tag{4-4}$$

Mechanical:

$$M\ddot{x} = F_c - B\dot{x} \tag{4-5}$$

Coupling:

$$F_c = A\, p_{12}$$

$$q_c = A\dot{x} \tag{4-6}$$

Unknown variables:

$$p_{s1}, q_1, q_{s1}, q_{s2}, p_{2r}, q_c, q_2, p_{1r}, p_{12}, F_c, x$$

Inputs:

$$p_{sr}$$

Output:

x, displacement of the mass

It can be verified that,

number of equations = number of variables = 11.

(B) Transforming the equations into s-domain gives,
Hydraulic:

$$P_{s1}(s) = R_1 Q_1(s)$$
$$Q_{s1}(s) = sC_1 P_{1r}(s)$$
$$Q_{s2}(s) = sC_2 P_{2r}(s)$$
$$P_{2r}(s) = R_2 Q_2(s)$$
$$P_{sr}(s) - P_{s1}(s) - P_{1r}(s) = 0 \quad \text{(loop 1)}$$
$$P_{1r}(s) - P_{12}(s) - P_{2r}(s) = 0 \quad \text{(loop 2)}$$
$$Q_1(s) = Q_c(s) + Q_{s1}(s) \quad \text{(node 1)}$$
$$Q_c(s) = Q_2(s) + Q_{s2}(s) \quad \text{(node 2)} \tag{4-7}$$

Mechanical:

$$(Ms^2 + Bs)X(s) = F_c(s) \tag{4-8}$$

Coupling:

$$F_c(s) = AP_{12}(s)$$
$$Q_c(s) = sAX(s) \tag{4-9}$$

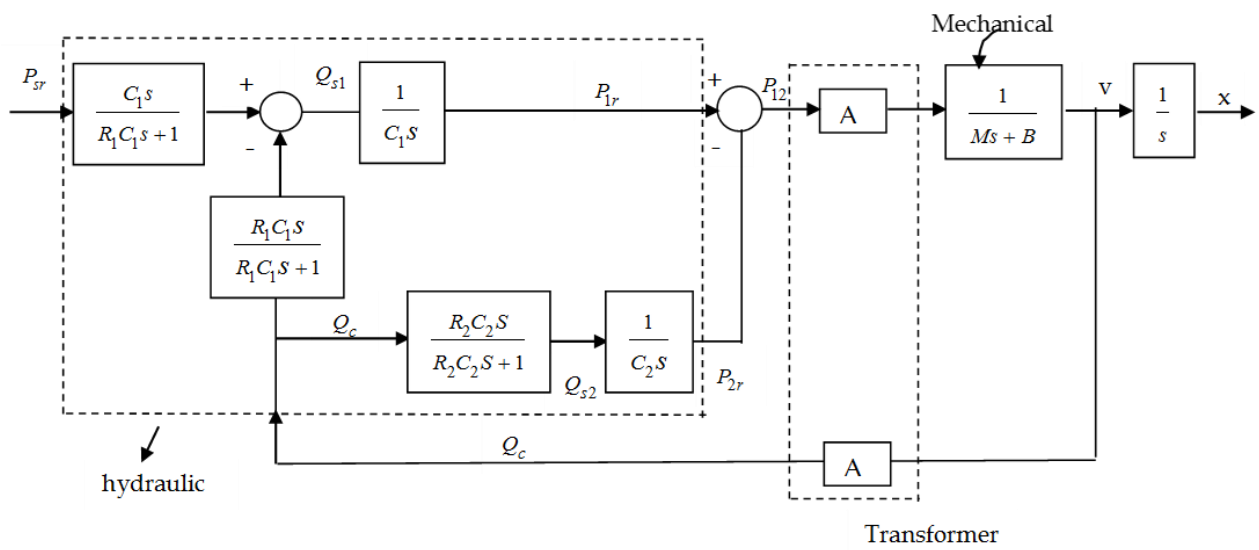

From (4-7),

$$R_2 Q_2 = \frac{1}{sC_2} Q_{s2}$$

$$R_2(Q_c - Q_{s2}) = \frac{1}{sC_2} Q_{s2}$$

$$\Rightarrow \quad Q_{s2} = \left(\frac{R_2C_2 s}{R_2C_2 s + 1}\right) Q_c \tag{4-10}$$

Similarly, from *loop* 1 equation in (4-7)

$$P_{sr} - R_1(Q_c + Q_{s1}) - \frac{1}{sC_1}Q_{s1} = 0$$

$$\boxed{\Rightarrow \quad Q_{s1} = \frac{C_1 s}{R_1 C_1 s + 1}P_{sr} - \frac{R_1 C_1 s}{R_1 C_1 s + 1}Q_c} \tag{4-11}$$

(C) From (4-8) and (4-9)

$$P_{12} = \frac{1}{A}(Ms^2 + Bs)X \tag{4-12}$$

Substituting (4-10), (4-11) and (4-12) into *loop* 2 from (4-7),

$$\frac{1}{sC_1}\left(\frac{sC_1P_{sr} - R_1C_1s^2AX}{R_1C_1s+1}\right) - \left(\frac{Ms^2+Bs}{A}\right)X - \frac{1}{sC_2}\left(\frac{R_2C_2s^2A}{R_2C_2s+1}\right)X = 0$$

Simplifying, we get

$$\boxed{\frac{X(s)}{P_{sr}(s)} = \frac{A(R_2C_2s+1)}{s\left[(Ms+B)(R_1C_1s+1)(R_2C_2s+1) + R_1A^2(R_2C_2s^2+1) + R_2A^2(R_1C_1s+1)\right]}} \tag{4-13}$$

(D) No, the system is not stable because one of the poles of the transfer function in (13) is zero. And this acts as an integrator which causes the displacement, *x*, to increase continuously for a constant input pressure p_{sr} .

PROBLEM #3 (20%)

Consider the following system which is composed of two thermal capacitances, three thermal resistances, and two heat sources:

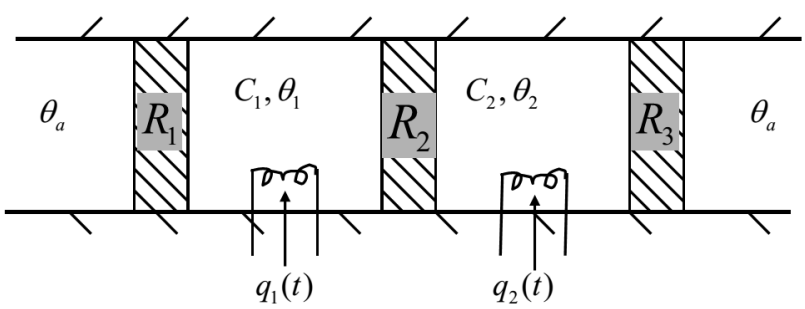

Assume that the system output is the relative temperature $\theta_{1a} = \theta_1 - \theta_a$. Obtain the system I/O model and the transfer functions of the system. (Hint: the inputs to the system are q_1, q_2 and θ_a).

Solution:

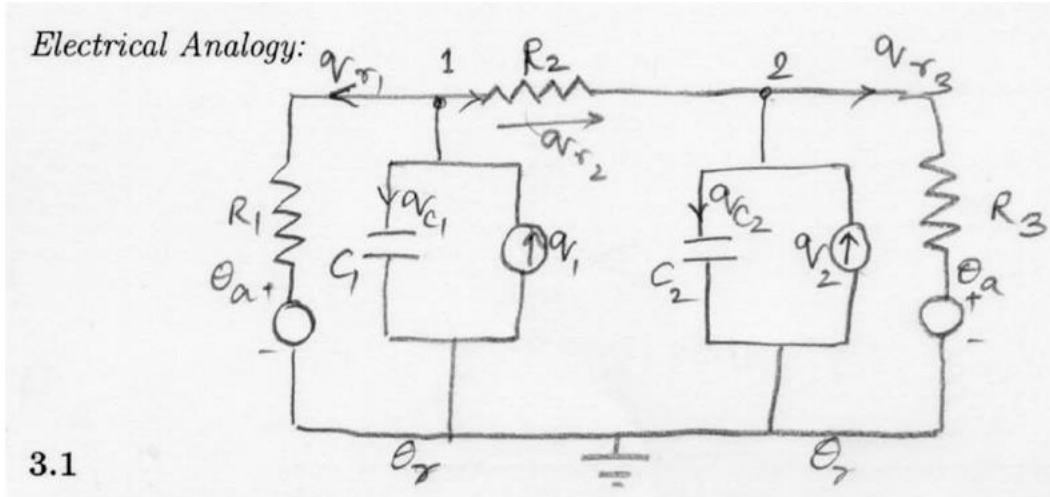

Elemental equations

$$Q_{C1} = sC_1\theta_{1r}$$

$$Q_{C2} = sC_2\theta_{2r}$$

$$Q_{r1} = \frac{1}{R_1}\theta_{1a}$$

$$Q_{r2} = \frac{1}{R_2}\theta_{12}$$

$$Q_{r3} = \frac{1}{R_3}\theta_{2a}$$

$$Q_1 - Q_{r1} - Q_{C1} - Q_{r2} = 0 \ (node1)$$

$$Q_2 + Q_{r2} - Q_{C2} - Q_{r3} = 0(node2)$$

$$\theta_{1r} = \theta_{1a} + \theta_{ar}(loop1)$$

$$\theta_{2r} = \theta_{2a} + \theta_{ar}(loop2) \quad (5\text{-}1)$$

Unknown variables: θ_{1r}, θ_{2r}, θ_{1a}, θ_{2a}, Q_{r1}, Q_{r2}, Q_{r3}, Q_{c1}, Q_{c2}

i/p: Q_1, Q_2, θ_{ar}

O/p: θ_{1a}

It can be verified that,

number of equations =numbers of variables =9.

Rewriting the node equations,

$$Q_1 - \frac{1}{R_1}\theta_{1a} - sC_1\theta_{1r} - \frac{1}{R_2}\theta_{12} = 0(node1)$$

$$Q_2 + \frac{1}{R_2}\theta_{12} - sC_2\theta_{2r} - \frac{1}{R_3}\theta_{2a} = 0(node2) \quad (5\text{-}2)$$

Using loop 1 and 2 Eqs from (5-1) in node 2 of equation (5-2), we obtain

$$Q_2 + \frac{1}{R_2}\theta_{12} - sC_2(-\theta_{12} + \theta_{1a} + \theta_{ar}) - \frac{1}{R_3}(-\theta_{12} + \theta_{1a}) = 0$$

$$\Rightarrow \theta_{12} = \frac{R_2}{R_2 + R_3 + sR_2R_3C_2}(-R_3Q_2 + (R_3sC_2 + 1)\theta_{1a} + R_3sC_2\theta_{ar}) \quad (5\text{-}3)$$

Substituting (16) in node 1 equation of (15) and solving θ_{1a} for we get

$$\theta_{1a} = \frac{R_1(R_2 + R_3 + sR_2R_3C_2)Q_1 + R_1R_3Q_2 - ((R_1R_2R_3C_1C_2)s^2 + (R_1R_2C_1 + R_1R_3C_1 + R_1R_3C_2)s)\theta_{ar}}{(R_1R_2R_3C_1C_2)s^2 + ((R_1R_2 + R_2R_3)C_1 + (R_2R_3 + R_1R_3)C_2)s + (R_1 + R_2 + R_3)} \quad (5\text{-}4)$$

Or, $\theta_{1a} = G_{\theta_{1a}Q_1}Q_1 + G_{\theta_{1a}Q_2}Q_2 + G_{\theta_{1a}Q_{ar}}Q_{ar}$

Where the transfer functions are,

$$G_{\theta_{1a}Q_1}Q_1 = \frac{R_1(R_2 + R_3 + sR_2R_3C_2)}{(R_1R_2R_3C_1C_2)s^2 + ((R_1R_2 + R_2R_3)C_1 + (R_2R_3 + R_1R_3)C_2)s + (R_1 + R_2 + R_3)}$$

$$G_{\theta_{1a}Q_2}Q_2 = \frac{R_1R_3}{(R_1R_2R_3C_1C_2)s^2 + ((R_1R_2 + R_2R_3)C_1 + (R_2R_3 + R_1R_3)C_2)s + (R_1 + R_2 + R_3)}$$

$$G_{\theta_{1a}Q_{ar}}Q_{ar} = -\frac{(R_1R_2R_3C_1C_2)s^2 + (R_1R_2C_1 + R_1R_3C_1 + R_1R_3C_2)s}{(R_1R_2R_3C_1C_2)s^2 + ((R_1R_2 + R_2R_3)C_1 + (R_2R_3 + R_1R_3)C_2)s + (R_1 + R_2 + R_3)}$$

And thus the I/O model can be written as,

$$(R_1R_2R_3C_1C_2)\ddot{\theta}_{1a} + ((R_1R_2 + R_2R_3)C_1 + (R_2R_3 + R_1R_3)C_2)\dot{\theta}_{1a} + (R_1 + R_2 + R_3)\theta_{1a}$$

$$\boxed{= R_1R_2R_3C_2\dot{q}_1 + R_1(R_2 + R_3)q_1 + R_1R_3q_2 - (R_1R_2R_3C_1C_2)\ddot{\theta}_{ar} - (R_1R_2C_1 + R_1R_3C_1 + R_1R_3C_2)\dot{\theta}_{ar}}$$